07/2019

Central heating

Condexa Pro system – cascade modules

Wall-hung gas condensing modules
Cascade installation

In conformity with Directive 2009/125/EC
Condensing thermal modules for indoor applications
Possibility of cascade up to 1120 kW
Modular design to ensure an easy and fast installation
Low polluting emissions, Class 6 (EN 15502)

RIELLO
Energy For Life

www.riello.com

Condexa Pro system

PRODUCT OVERVIEW

Condexa PRO is the new Riello proposal as a modular condensing wall-hung system, capable to ensure extremely high performance level and cover a wide range of applications, with the possibility of indoor installation, with open chamber or sealed combustion, stand alone or cascade configurations are possible with heat output up to 1120 kW.
The range consists of 8 models with thermal modules from 35 up to 131 kW. Each thermal module is equipped with the innovative heat exchanger with patented geometries, consisting of two smooth concentric stainless steel tubes, each having a pentagonal inner section and a circular outer section, designed to maximize the exchange surface and offer maximum corrosion resistance. The 35/50 kW models are equipped with an helical, single principle exchanger, called LINOX.
The primary circuit pump with modulating regulation allows working with a settable constant Δt, reducing set-up plant regime times and maximizing condensation. The basic electronics include climate control, module cascade management, with integrated master / slave functions, automatic summer / winter switching and the possibility of managing a direct zone and a DHW tank.
The electronics also offers the possibility of remote management via 0-10V input or with the Modbus protocol.
Standard equipment includes: boiler drain tap, safety valves, LPG conversion kit and wall support.
To complete the system there are accessories specifically designed for single and cascade applications, with the possibility of working with different hydraulic management logics, ie thermal modules with circulators, 2-way valves or no interception.
Through appropriate accessories there is also the possibility of managing the distribution of the secondary circuit, up to 16 mixed zones. The optimal management of combustion and the high modulation ratios from 1 up to 50 for the cascade installations with 10 thermal modules allow high efficiencies and low pollutant emissions (Class 6, UNI EN 15502-1).

- Service continuity is guaranteed by the system modularity: even in the case of a module failure, the overall operation it is not prejudiced
- The anti-freeze and anti-seize functions ensure operation in all weather conditions
- Maximum operating pressure: 6 bar
- A wide range of accessories is available to ensure a simple, fast and complete cascade installation

Model	Condexa PRO system							
	35 P	50 P	57 P	70 P	90	100	115	135
No. of thermal modules thermal			Total Cascade heat output (kW)					
2	70	90	114	136	180	194	224	262
3	105	135	171	204	270	291	336	393
4	140	180	228	272	360	388	448	524
5	175	225	285	340	450	485	560	655
6	209	270	342	408	540	582	672	786
7	244	315	399	476	630	679	784	917
8	279	360	456	544	720	776	896	1048
9	314	405	513	612	810	873	1008	ND
10	349	450	570	680	900	970	1120	ND

CONDEXA PRO 35 P – 70 P TECHNICAL DATA

MODEL		CONDEXA PRO 35 P	CONDEXA PRO 50 P	CONDEXA PRO 57 P	CONDEXA PRO 70 P
Material		STEEL	STEEL	STEEL	STEEL
Efficiency class		> 93 + 2 log Pn	> 93 + 2 log Pn	> 93 + 2 log Pn	> 93 + 2 log Pn
Fuel		NG-LPG	NG-LPG	NG-LPG	NG-LPG
Test room temperature	°C	20	20	20	20
Max. rated heat input at furnace (LCV)	kW	34,9	45,0	57,0	68,0
Min. rated heat input at furnace (LCV)	kW	9,0	9,0	14,0	14,0
Max. rated heat output (80-60°C)	kW	34,4	44,2	55,7	67,0
Min. rated heat output (80-60°C)	kW	8,9	8,9	13,5	13,5
Max. rated heat output (50-30°C)	kW	38,0	48,8	61,9	73,9
Min. rated heat output (50-30°C)	kW	9,9	9,9	14,9	14,9
Efficiency at max. rated heat output (80-60°C)	%	98,4	98,3	98,3	98,1
Efficiency at min. rated heat output (80-60°C)	%	99,1	98,9	98,9	98,9
Efficiency at max. rated heat output (50-30°C)	%	108,7	108,6	108,6	108,1
Efficiency at min. rated heat output (50-30°C)	%	110,0	109,7	109,3	109,3
Useful efficiency at 30%	%	109,5	109,2	109,2	109,0
Heat loss in standby mode	%	0,1	0,1	0,1	0,1
Chimney losses with burner on at P.max	%	2,3	2,3	2,3	2,3
Chimney losses with burner on at P.min	%	0,5	0,1	0,1	0,1
Blanket losses with burner on with 70°C average temperature	%	1,4	1,1	0,9	0,9
Blanket losses with burner off with 70°C average temperature	%	1,4	1,1	0,9	0,9
Flue gas temperature at max. and min. power 80-60°C	°C	66,5 / 61,0	67,5 / 61,0	71,0 / 61,0	72,0 / 61,0
Flue gas temperature at max. and min. power 50-30°C	°C	44,0 / 32,0	45,0 / 32,0	45,0 / 33,0	46,0 / 33,0
Excess air at max.power		1,27	1,27	1,27	1,27
Excess air at min.power		1,27	1,27	1,27	1,27
Max-min flue gas mass flow rate	kg/s	0,0150-0,0050	0,0200-0,0050	0,0250-0,0070	0,0300-0,0070
Available useful discharge head P.max	Pa	300	480	510	630
Available useful discharge head P.min	Pa	45	45	35	35
Flue side pressure drop	mbar	---	---	---	---
NOx	mg/kWh	42,0	43,9	34,2	36,4
Water-side resistance (ΔT 20°C)	mbar	---	---	---	---
Available useful discharge head (ΔT 20°C)	mbar	420	250	490	390
Water-side resistence (ΔT 10°C)	mbar	---	---	---	---
Available useful discharge head (ΔT 10°C)	mbar	---	---	---	---
Water content	l	5	5	15	15
Maximum working pressure	bar	6	6	6	6
Expansion tank capacity	l	---	---	---	---
Power supply	V/Hz	230-50	230-50	230-50	230-50
Electrical protection level	IP	IPX4D	IPX4D	IPX4D	IPX4D
Electrical consumption with boiler at max. power	W	75	105	63	77
Electrical consumption with boiler at min. power	W	31	34	30	30
Electrical consumption with pumps at max. power	W	---	---	---	---
Electrical consumption with pumps at min. power	W	---	---	---	---
Flue gas discharge diameter	mm	80	80	80	80
Empty weight	kg	66	66	78	78
Category according to UNI 10642		II 2H3P appliance	II 2H3P appliance	II 2H3P appliance	II 2H3P appliance
Boiler water content	l	---	---	---	---
Boiler losses	W/K	---	---	---	---
Boiler material		---	---	---	---
Insulation thickness	mm	---	---	---	---
Boiler circulator absorption	W	---	---	---	---
Sanitary expansion vessel	l	---	---	---	---
Noise	dB(A)	51	52	53	54
Nominal/min natural gas pressure supply (G20)	mbar	20 / 17	20 / 17	20 / 17	20 / 17
Nominal/min natural gas pressure supply (G31)	mbar	37 / 25	37 / 25	37 / 25	37 / 25

CONDEXA PRO 90 – 135 TECHNICAL DATA

MODEL		CONDEXA PRO 90	CONDEXA PRO 100	CONDEXA PRO 115	CONDEXA PRO 135
Material		STEEL	STEEL	STEEL	STEEL
Efficiency class		> 93 + 2 log Pn	> 93 + 2 log Pn	> 93 + 2 log Pn	> 93 + 2 log Pn
Fuel		NG-LPG	NG-LPG	NG-LPG	NG-LPG
Test room temperature	°C	20	20	20	20
Max. rated heat input at furnace (LCV)	kW	90,0	97,0	112,0	131,0
Min. rated heat input at furnace (LCV)	kW	19,4	19,4	22,4	26,2
Max. rated heat output (80-60°C)	kW	88,3	95,2	109,8	129,0
Min. rated heat output (80-60°C)	kW	19,2	19,2	22,1	26,0
Max. rated heat output (50-30°C)	kW	97,4	105,1	121,1	142,1
Min. rated heat output (50-30°C)	kW	21,1	21,1	24,5	28,9
Efficiency at max. rated heat output (80-60°C)	%	98,2	98,1	98,5	98,3
Efficiency at min. rated heat output (80-60°C)	%	98,8	98,8	99,2	99,1
Efficiency at max. rated heat output (50-30°C)	%	108,3	108,2	108,6	108,3
Efficiency at min. rated heat output (50-30°C)	%	109,2	109,2	110,0	110,0
Useful efficiency at 30%	%	109,1	109,0	109,0	109,1
Heat loss in standby mode	%	0,1	0,1	0,1	0,1
Chimney losses with burner on at P.max	%	2,5	2,6	2,5	2,6
Chimney losses with burner on at P.min	%	0,2	0,2	0,1	0,1
Blanket losses with burner on with 70°C average temperature	%	0,9	0,9	0,9	0,9
Blanket losses with burner off with 70°C average temperature	%	0,9	0,9	0,9	0,9
Flue gas temperature at max. and min. power 80-60°C	°C	76,0 / 62,0	78,0 / 62,0	75,0 / 61,0	77,0 / 61,0
Flue gas temperature at max. and min. power 50-30°C	°C	47,0 / 35,0	49,0 / 35,0	45,0 / 33,0	48,0 / 35,0
Excess air at max.power		1,27	1,27	1,27	1,27
Excess air at min.power		1,27	1,27	1,27	1,27
Max-min flue gas mass flow rate	kg/s	0,0400-0,0072	0,0460-0,0072	0,0500-0,0100	0,0600-0,0110
Available useful discharge head P.max	Pa	560	610	500	353
Available useful discharge head P.min	Pa	32	32	30	28
Flue side pressure drop	mbar	---	---	---	---
NOx	mg/kWh	38,1	38,7	39,3	46,1
Water-side resistance (ΔT 20°C)	mbar	160	210	350	510
Available useful discharge head (ΔT 20°C)	mbar	---	---	---	---
Water-side resistence (ΔT 10°C)	mbar	---	---	---	---
Available useful discharge head (ΔT 10°C)	mbar	---	---	---	---
Water content	l	17	17	23	25
Maximum working pressure	bar	6	6	6	6
Expansion tank capacity	l	---	---	---	---
Power supply	V/Hz	230-50	230-50	230-50	230-50
Electrical protection level	IP	IPX4D	IPX4D	IPX4D	IPX4D
Electrical consumption with boiler at max. power	W	150	203	205	302
Electrical consumption with boiler at min. power	W	36	31	44	45
Electrical consumption with pumps at max. power	W	---	---	---	---
Electrical consumption with pumps at min. power	W	---	---	---	---
Flue gas discharge diameter	mm	110	110	110	110
Empty weight	kg	81	81	93	97
Category according to UNI 10642		II 2H3P appliance	II 2H3P appliance	II 2H3P appliance	II 2H3P appliance
Boiler water content	l	---	---	---	---
Boiler losses	W/K	---	---	---	---
Boiler material		---	---	---	---
Insulation thickness	mm	---	---	---	---
Boiler circulator absorption	W	---	---	---	---
Sanitary expansion vessel	l	---	---	---	---
Noise	dB(A)	55	56	57	57
Nominal/min natural gas pressure supply (G20)	mbar	20 / 17	20 / 17	20 / 17	20 / 17
Nominal/min natural gas pressure supply (G31)	mbar	37 / 25	37 / 25	37 / 25	37 / 25

ErP TECHNICAL DATA

MODEL			CONDEXA PRO 35 P	CONDEXA PRO 50 P	CONDEXA PRO 57 P	CONDEXA PRO 70 P
Seasonal efficiency class in central heating mode			A	A	A	A
Seasonal efficiency class in water heating			---	---	---	---
Useful (rated) heat output	Pn	kW	34,4	44,2	56	68
Seasonal efficiency class in room heating mode	ηs	%	94	94	94	94
USEFUL THERMAL POWER						
At useful heat output and at high temperature capacity (*)	P4	kW	34,4	44,2	55,7	67
At 30% of useful heat output and at low temperature capacity (**)	P1	kW	11,5	14,7	18,7	22,3
EFFICIENCY						
At useful heat output and at high temperature capacity (*)	η4	%	88,4	88,4	88,4	88,2
At 30% of useful heat output and at low temperature capacity (**)	η1	%	98,4	98,2	98,2	98,0
AUXILIARY ELECTRICAL CONSUMPTION						
At full load	elmax	W	75	105	63	77
At partial load	elmin	W	31	34	30	30
In standby mode	PSB	W	9	9	13	13
OTHER PARAMETERS						
Thermal losses in Stand-by mode	Pstby	W	45,0	57,0	72,0	87,0
Pilot flame energy consumption	Pign	W	---	---	---	---
Yearly energy consumption	QHE	GJ	71	91	117	141
Noise level, indoor (sound power)	LWA	dB	51	52	53	54
Nitrogen oxide emissions (NOx)	NOx	mg/kWh	42,0	43,9	34,2	36,4
FOR COMBINED HEATING EQUIPMENT						
Declared load profile						
Energy efficiency class in water heating	ηwh	%	---	---	---	---
Daily electrical energy consumption	Qelec	kWh	---	---	---	---
Daily fuel consumption	Qfuel	kWh	---	---	---	---
Annual electrical energy consumption	AEC	kWh	---	---	---	---
Annual fuel consumption	AFC	GJ	---	---	---	---

MODEL			CONDEXA PRO 90	CONDEXA PRO 100	CONDEXA PRO 115	CONDEXA PRO 135
Seasonal efficiency class in central heating mode			---	---	---	---
Seasonal efficiency class in water heating			---	---	---	---
Useful (rated) heat output	Pn	kW	88	95	110	129
Seasonal efficiency class in room heating mode	ηs	%	94	94	94	94
USEFUL THERMAL POWER						
At useful heat output and at high temperature capacity (*)	P4	kW	88,3	95,3	109,8	129,0
At 30% of useful heat output and at low temperature capacity (**)	P1	kW	29,4	31,7	36,6	43,0
EFFICIENCY						
At useful heat output and at high temperature capacity (*)	η4	%	88,3	88,2	88,6	88,2
At 30% of useful heat output and at low temperature capacity (**)	η1	%	98,1	98,0	98,0	98,1
AUXILIARY ELECTRICAL CONSUMPTION						
At full load	elmax	W	150	203	205	302
At partial load	elmin	W	36	31	44	45
In standby mode	PSB	W	6	6	6	8
OTHER PARAMETERS						
Thermal losses in Stand-by mode	Pstby	W	115,0	124,0	143,0	168,0
Pilot flame energy consumption	Pign	W	---	---	---	---
Yearly energy consumption	QHE	GJ	---	---	---	---
Noise level, indoor (sound power)	LWA	dB	55	56	57	57
Nitrogen oxide emissions (NOx)	NOx	mg/kWh	38,1	38,7	39,3	46,1
FOR COMBINED HEATING EQUIPMENT						
Declared load profile						
Energy efficiency class in water heating	ηwh	%	---	---	---	---
Daily electrical energy consumption	Qelec	kWh	---	---	---	---
Daily fuel consumption	Qfuel	kWh	---	---	---	---
Annual electrical energy consumption	AEC	kWh	---	---	---	---
Annual fuel consumption	AFC	GJ	---	---	---	---

LAW TABLE 10

BOILER MODELS				Condexa PRO 35 P	Condexa PRO 50 P	Condexa PRO 57 P	Condexa PRO 70 P
MAXIMUM THERMAL POWER							
		Useful (80/60°C)	kW	34,4	44,2	55,7	67
		Useful (50/30°C)	kW	38,0	48,8	61,9	73,9
		Furnace	kW	34,9	45,0	57	68
MINIMUM THERMAL POWER							
		Useful (80/60°C)	kW	8,9	8,9	13,5	13,5
		Useful (50/30°C)	kW	9,9	9,9	14,9	14,9
		Furnace	kW	9,0	9,0	14	14
EFFICIENCY							
		Useful (80/60°C)	%	98,4-99,1	98,34-98,9	98,3-98,9	98,1-98,9
		Useful (50/30°C)	%	108,7-110,0	108,6-119,7	108,6-109,3	108,1-109,3
		With reduced load 30% (return 30°C)	%	109,5	109,2	109,2	109
COMBUSTION							
		Chimney and blanket losses with burner on	%	2,5-1,4	2,3-1,1	2,3-0,9	2,3-0,9
		Chimney losses with burner off	%	0,5	0,1	0,1	0,1
		Flue flow rate	kg/s	0,015	0,020	0,025	0,03
GAS EMISSION VALUES AT MAX AND MIN FLOW RATES G20 (**)							
		CO s.a. less than (***)	ppm	63	73	79	90
		CO_2	%	9	9	9	9
	MAXIMUM	NOx (EN 677) (***)	ppm	30	30	30	30
		Flue temperature	°C	66,5	67,5	71	72
		ΔT flue - return water	K	6,50	7,50	11	12
		CO s.a. less than (***)	ppm	2,3	2,3	6,5	6,5
		CO_2	%	9	9	9	9
	MINIMUM	NOx (EN 677) (***)	ppm	30	30	30	30
		Flue temperature	°C	61	61	61	61
		ΔT flue - return water	K	1	1	1	1
		NOx class		6	6	6	6
		Electric power: circulator, total		75	105	63	77

(**) Verification carried out with concentric pipe Ø 60-100 mm length 0.85 m; water temperatures 80-60°C.
(***) Graphs for intermediate power values are also available. The expressed data must not be used to certify the plant; for certification the data indicated in the "Installation manual" measured at the time of the first ignition must be used.

BOILER MODELS				Condexa PRO 90	Condexa PRO 100	Condexa PRO 115	Condexa PRO 135
MAXIMUM THERMAL POWER							
		Useful (80/60°C)	kW	88,3	95,2	109,8	129
		Useful (50/30°C)	kW	97,4	105,1	121,1	142,1
		Furnace	kW	90	97	112	131
MINIMUM THERMAL POWER							
		Useful (80/60°C)	kW	19,2	19,2	22,1	26,2
		Useful (50/30°C)	kW	21,1	21,1	24,5	26,2
		Furnace	kW	19,4	19,4	22,4	28,9
EFFICIENCY							
		Useful (80/60°C)	%	98,2-98,8	98,1-98,8	98,5-99,2	98,3-99,1
		Useful (50/30°C)	%	108,3-109,2	108,2-109,2	108,6-110	108,3-110
		With reduced load 30% (return 30°C)	%	109,1	109	109	109,1
COMBUSTION							
		Chimney and blanket losses with burner on	%	2,5-0,9	2,6-0,9	2,5-0,9	2,6-0,9
		Chimney losses with burner off	%	0,1	0,1	0,1	0,1
		Flue flow rate	kg/s	0,04	0,046	0,05	0,06
GAS EMISSION VALUES AT MAX AND MIN FLOW RATES G20 (**)							
		CO s.a. less than (***)	ppm	81	92	92	92
		CO_2	%	9	9	9	9
	MAXIMUM	NOx (EN 677) (***)	ppm	30	30	30	35
		Flue temperature	°C	76	78	75	77
		ΔT flue - return water	K	16	18	15	17
		CO s.a. less than (***)	ppm	7,5	7,5	6,0	6,5
		CO_2	%	9	9	9	9
	MINIMUM	NOx (EN 677) (***)	ppm	30	30	30	40
		Flue temperature	°C	62	62	61	61
		ΔT flue - return water	K	2	2	1	1
		NOx class		6	6	6	6
		Electric power: circulator, total		150	203	205	302

(**) Verification carried out with concentric pipe Ø 60-100 mm length 0.85 m; water temperatures 80-60°C.
(***) Graphs for intermediate power values are also available. The expressed data must not be used to certify the plant; for certification the data indicated in the "Installation manual" measured at the time of the first ignition must be used.

OVERALL DIMENSIONS

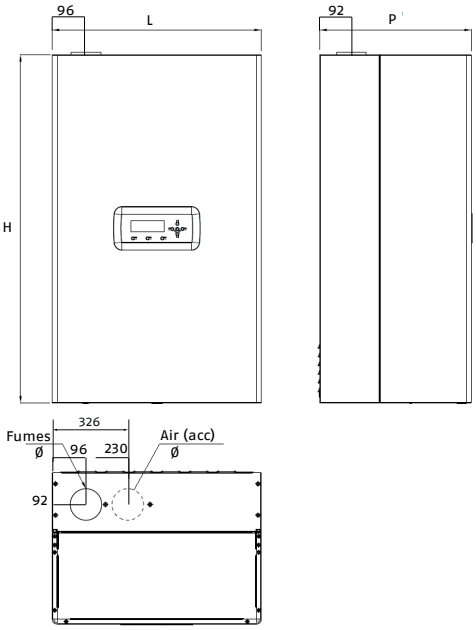

Description	H mm	L mm	P mm	Ø fumes/ air mm	Net weight kg
CONDEXA PRO 35 P	1000	600	435	80	66
CONDEXA PRO 50 P	1000	600	435	80	66
CONDEXA PRO 57 P	1000	600	435	80	78
CONDEXA PRO 70 P	1000	600	435	80	78
CONDEXA PRO 90	1000	600	435	110	81
CONDEXA PRO 100	1000	600	435	110	81
CONDEXA PRO 115	1165	600	435	110	93
CONDEXA PRO 135	1165	600	435	110	97

SYSTEM LAYOUT

Condexa PRO 35 P – 50 P

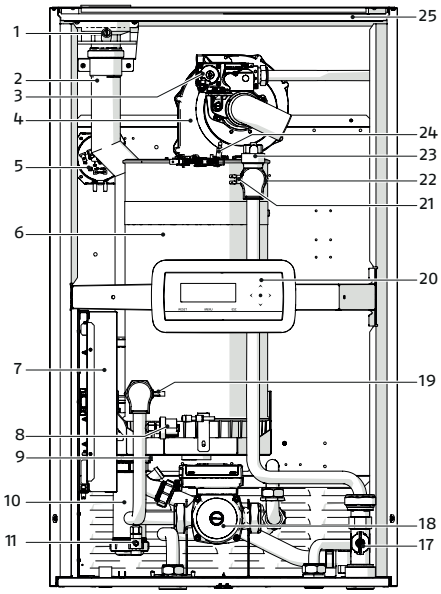

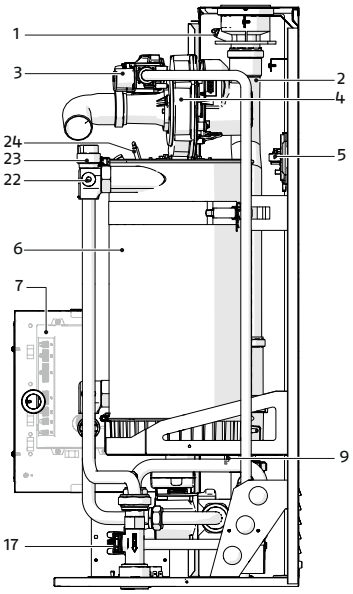

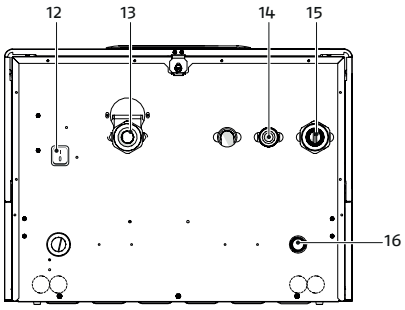

1. Flue gas analysis outlet
2. Flue gas exhaust connection
3. Gas valve
4. Fan
5. Flue gases pressure switch
6. Combustion chamber
7. Electrical panel
8. Minimum pressure switch set at 0.7 bar
9. Exhaust flue probe
10. Condensate drain syphon
11. Drain tap
12. Main switch
13. System return
14. Gas supply
15. Central heating flow
16. Condensate drain connection
17. Flow meter
18. Circulator
19. Return probe
20. Control panel
21. Safety thermostat with manual reset by PCB
22. Flow probe
23. Automatic bleed valve
24. Ignition/detection electrode
25. Casing

Condexa PRO 57 P - 70 P

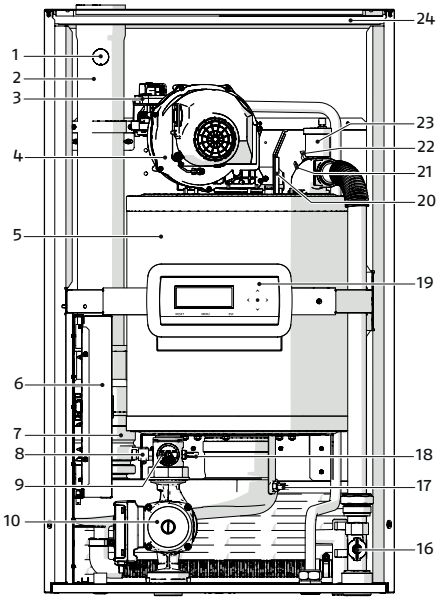

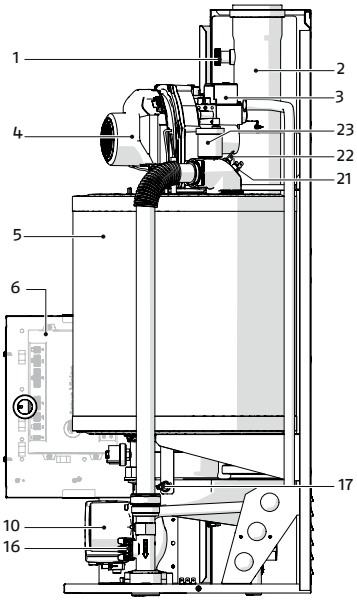

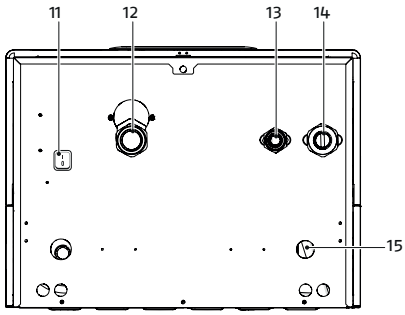

1. Flue gas analysis outlet
2. Flue gas exhaust connection
3. Gas valve
4. Fan
5. Combustion chamber
6. Electrical panel
7. Smoke-exhaust flue non-return valve
8. Drain tap
9. Minimum pressure switch set at 0.7 bar
10. Circulator
11. Main switch
12. System return
13. Gas supply
14. Central heating flow
15. Condensate drain connection
16. Flow meter
17. Exhaust flue probe
18. Return probe
19. Control panel
20. Ignition / detection electrode
21. Safety thermostat with manual reset by PCB
22. Flow probe
23. Automatic bleed valve
24. Casing

Condexa PRO 90 - 100 - 115 - 135

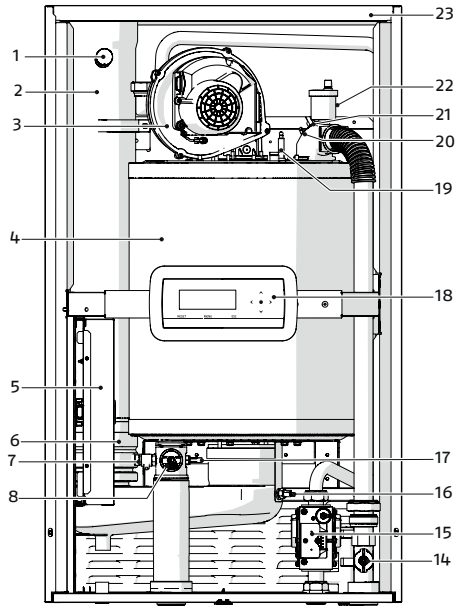

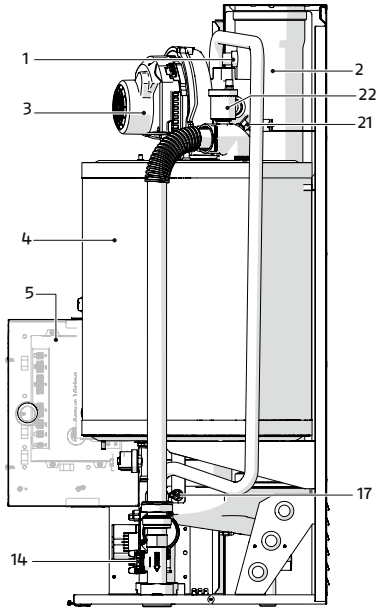

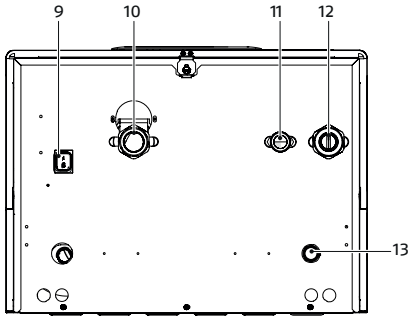

1. Flue gas analysis outlet
2. Flue gas exhaust connection
3. Fan
4. Combustion chamber
5. Electrical panel
6. Smoke-exhaust flue non-return valve
7. Drain tap
8. Minimum pressure switch set at 0.7 bar
9. Main switch
10. System return
11. Gas supply
12. Central heating flow
13. Condensate drain connection
14. Flow meter
15. Gas valve
16. Exhaust flue probe
17. Return probe
18. Control panel
19. Ignition / detection electrode
20. Safety thermostat with manual reset by PCB
21. Flow probe
22. Automatic bleed valve
23. Casing

2 modules FR0NT configuration

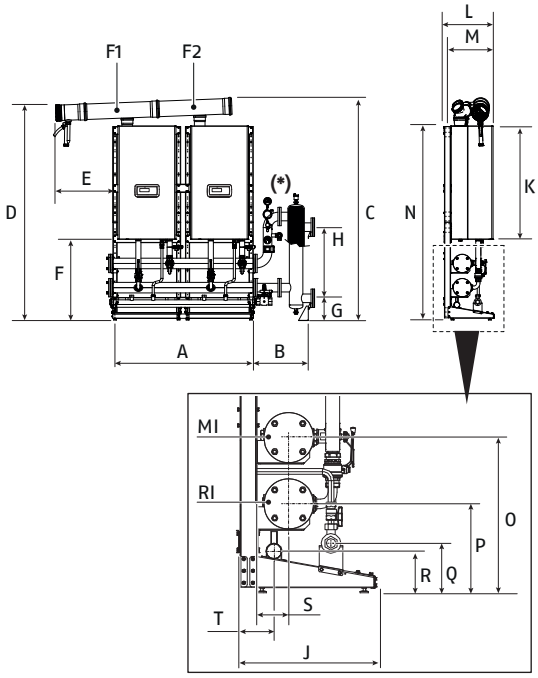

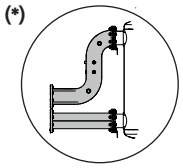

Safety ambidextrous kit

DESCRIPTION	Condexa PR0								
	35 P	50 P	57 P	70 P	90	100	115	135	
A	1494	1494	1494	1494	1494	1494	1494	1494	mm
B	591	591	591	591	591	591	591	591	mm
C	2275	2275	2131	2131	2131	2131	2301	2301	mm
D	2195	2195	2051	2051	2051	2051	2221	2221	mm
E	594	594	594	594	594	594	594	594	mm
F	834	834	834	834	834	834	834	834	mm
G	230	230	230	230	230	230	230	230	mm
H	735	735	735	735	735	735	735	735	mm
J	525	525	525	525	525	525	525	525	mm
K	1010	1010	1010	1010	1010	1010	1173	1173	mm
L	511	511	511	511	511	511	511	511	mm
M	436	436	436	436	436	436	436	436	mm
N	1999	1999	1999	1999	1999	1999	1999	1999	mm
O	584	584	584	584	584	584	584	584	mm
P	334	334	334	334	334	334	334	334	mm
Q	186	186	186	186	186	186	186	186	mm
R	156	156	156	156	156	156	156	156	mm
S	121	121	121	121	121	121	121	121	mm
T	137	137	137	137	137	137	137	137	mm
F1	Ø 160	Ø 160	Ø 160	Ø 160	Ø 160	Ø 160	Ø 160	Ø 160	mm
F2	Ø 160	Ø 160	Ø 160	Ø 160	Ø 160	Ø 160	Ø 160	Ø 160	mm
R	Ø 3"								inch
F	Ø 3"								inch

3 modules FRONT configuration

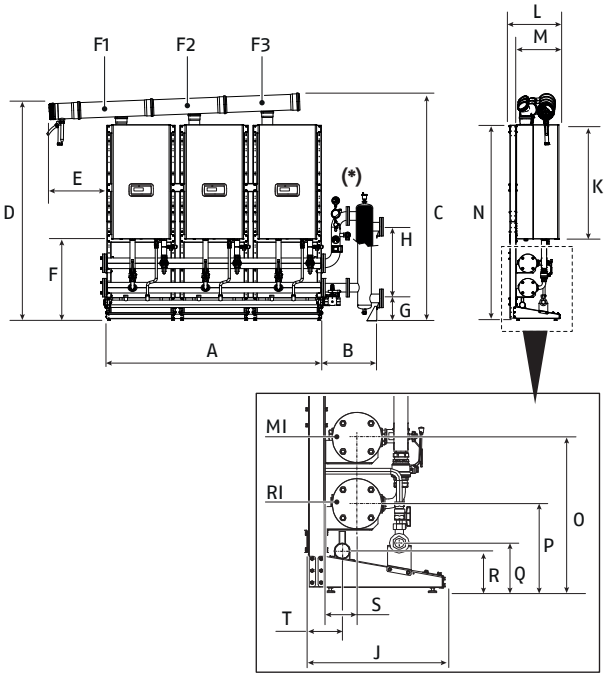

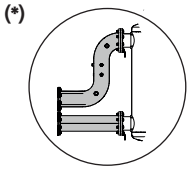

Safety ambidextrous kit

DESCRIPTION	Condexa PRO								
	35 P	50 P	57 P	70 P	90	100	115	135	
A	2242	2242	2242	2242	2242	2242	2242	2242	mm
B	591	591	591	591	591	591	591	591	mm
C	2305	2305	2161	2161	2161	2161	2240	2240	mm
D	2195	2195	2051	2051	2051	2051	2221	2221	mm
E	594	594	594	594	594	594	594	594	mm
F	834	834	834	834	834	834	834	834	mm
G	230	230	230	230	230	230	230	230	mm
H	735	735	735	735	735	735	735	735	mm
J	525	525	525	525	525	525	525	525	mm
K	1010	1010	1010	1010	1010	1010	1173	1173	mm
L	511	511	511	511	511	511	511	511	mm
M	436	436	436	436	436	436	436	436	mm
N	1999	1999	1999	1999	1999	1999	1999	1999	mm
O	584	584	584	584	584	584	584	584	mm
P	334	334	334	334	334	334	334	334	mm
Q	186	186	186	186	186	186	186	186	mm
R	156	156	156	156	156	156	156	156	mm
S	121	121	121	121	121	121	121	121	mm
T	137	137	137	137	137	137	137	137	mm
F1	Ø 160	Ø 160	Ø 160	Ø 160	Ø 160	Ø 160	Ø 160	Ø 160	mm
F2	Ø 160	Ø 160	Ø 160	Ø 160	Ø 160	Ø 160	Ø 160	Ø 160	mm
F3	Ø 160	Ø 160	Ø 160	Ø 160	Ø 160	Ø 160	Ø 160	Ø 160	mm
R	Ø 3"								inch
F	Ø 3"								inch

4 modules FRONT configuration

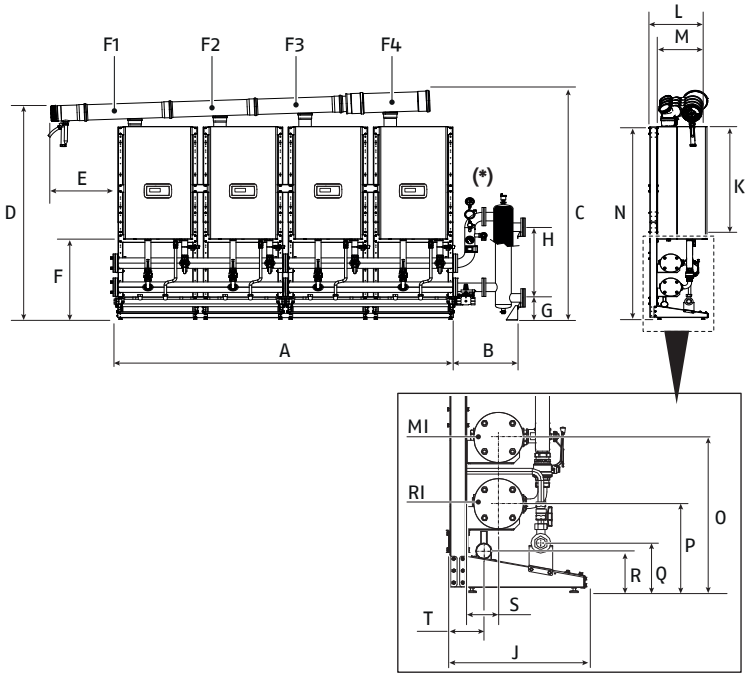

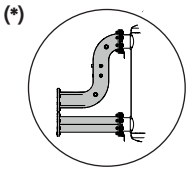

Safety ambidextrous kit

DESCRIPTION		Condexa PRO								
		35 P	50 P	57 P	70 P	90	100	115	135	
A		2988	2988	2988	2988	2988	2988	2988	2988	mm
B	3"	591	591	591	591	591	591	591	591	mm
	5"	1159	1159	1159	1159	1159	1159	1159	1159	mm
C		2334	2334	2190	2190	2190	2190	2382	2382	mm
D		2195	2195	2051	2051	2051	2051	2221	2221	mm
E		594	594	594	594	594	594	594	594	mm
F		834	834	834	834	834	834	834	834	mm
G	3"	230	230	230	230	230	230	230	N.D.	mm
	5"	N.D.	N.D.	N.D.	N.D.	N.D.	N.D.	N.D.	337	mm
H	3"	735	735	735	735	735	735	735	N.D.	mm
	5"	N.D.	N.D.	N.D.	N.D.	N.D.	N.D.	N.D.	850	mm
J		525	525	525	525	525	525	525	525	mm
K		1010	1010	1010	1010	1010	1010	1173	1173	mm
L		511	511	511	511	511	511	511	511	mm
M		436	436	436	436	436	436	436	436	mm
N		1999	1999	1999	1999	1999	1999	1999	1999	mm
O		584	584	584	584	584	584	584	584	mm
P		334	334	334	334	334	334	334	334	mm
Q		186	186	186	186	186	186	186	186	mm
R		156	156	156	156	156	156	156	156	mm
S		121	121	121	121	121	121	121	121	mm
T		137	137	137	137	137	137	137	137	mm
F1		Ø 160	Ø 160	Ø 160	Ø 160	Ø 160	Ø 160	Ø 160	Ø 160	mm
F2		Ø 160	Ø 160	Ø 160	Ø 160	Ø 160	Ø 160	Ø 160	Ø 160	mm
F3		Ø 160	Ø 160	Ø 160	Ø 160	Ø 160	Ø 160	Ø 160	Ø 160	mm
F4		Ø 160	Ø 160	Ø 160	Ø 160	Ø 160	Ø 160	Ø 160	Ø 200	mm
R					Ø 3"				Ø 5"	inch
F					Ø 3"				Ø 5"	inch

5 modules FRONT configuration

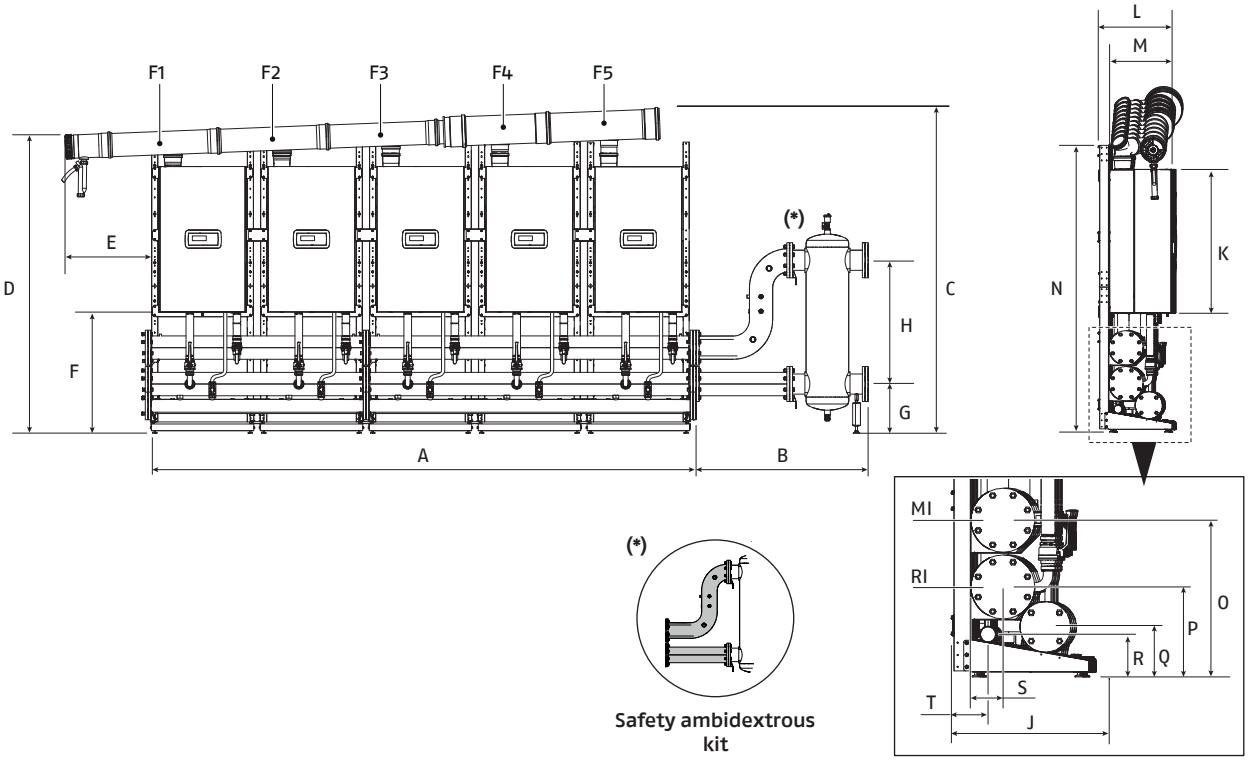

DESCRIPTION		Condexa PRO								
		35 P	50 P	57 P	70 P	90	100	115	135	
A		3736	3736	3736	3736	3736	3736	3736	3736	mm
B	3"	591	591	591	591	591	591	591	591	mm
	5"	1159	1159	1159	1159	1159	1159	1159	1159	mm
C		2385	2385	2241	2241	2241	2241	2411	2411	mm
D		2195	2195	2051	2051	2051	2051	2221	2221	mm
E		594	594	594	594	594	594	594	594	mm
F		834	834	834	834	834	834	834	834	mm
G	3"	230	230	230	230	230	230	N.D.	N.D.	mm
	5"	N.D.	N.D.	N.D.	N.D.	N.D.	N.D.	337	337	mm
H	3"	735	735	735	735	735	735	N.D.	N.D.	mm
	5"	N.D.	N.D.	N.D.	N.D.	N.D.	N.D.	850	850	mm
J		525	525	525	525	525	525	525	525	mm
K		1010	1010	1010	1010	1010	1010	1173	1173	mm
L		511	511	511	511	511	511	511	511	mm
M		436	436	436	436	436	436	436	436	mm
N		1999	1999	1999	1999	1999	1999	1999	1999	mm
O		584	584	584	584	584	584	584	584	mm
P		334	334	334	334	334	334	334	334	mm
Q		186	186	186	186	186	186	186	186	mm
R		156	156	156	156	156	156	156	156	mm
S		121	121	121	121	121	121	121	121	mm
T		137	137	137	137	137	137	137	137	mm
F1		Ø 160	Ø 160	Ø 160	Ø 160	Ø 160	Ø 160	Ø 160	Ø 160	mm
F2		Ø 160	Ø 160	Ø 160	Ø 160	Ø 160	Ø 160	Ø 160	Ø 160	mm
F3		Ø 160	Ø 160	Ø 160	Ø 160	Ø 160	Ø 160	Ø 160	Ø 160	mm
F4		Ø 160	Ø 160	Ø 160	Ø 160	Ø 160	Ø 160	Ø 160	Ø 200	mm
F5		Ø 160	Ø 160	Ø 160	Ø 160	Ø 200	Ø 200	Ø 200	Ø 200	mm
R		Ø 3"						Ø 5"		inch
F		Ø 3"						Ø 5"		inch

6 modules FRONT configuration

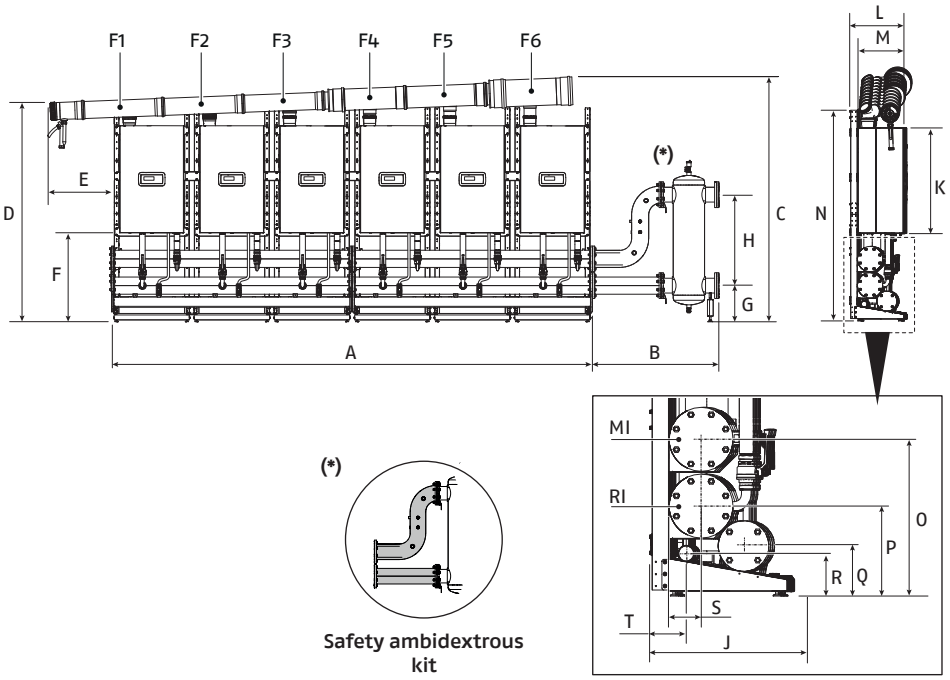

DESCRIPTION		Condexa PRO								
		35 P	50 P	57 P	70 P	90	100	115	135	
A		4484	4484	4484	4484	4484	4484	4484	4484	mm
B	3"	591	591	591	591	591	591	591	591	mm
	5"	1159	1159	1159	1159	1159	1159	1159	1159	mm
C		2414	2414	2270	2270	2270	2270	2461	2461	mm
D		2195	2195	2051	2051	2051	2051	2221	2221	mm
E		594	594	594	594	594	594	594	594	mm
F		834	834	834	834	834	834	834	834	mm
G	3"	230	230	230	230	N.D.	N.D.	N.D.	N.D.	mm
	5"	N.D.	N.D.	N.D.	N.D.	337	337	337	337	mm
H	3"	735	735	735	735	N.D.	N.D.	N.D.	N.D.	mm
	5"	N.D.	N.D.	N.D.	N.D.	850	850	850	850	mm
J		525	525	525	525	525	525	525	525	mm
K		1010	1010	1010	1010	1010	1010	1173	1173	mm
L		511	511	511	511	511	511	511	511	mm
M		436	436	436	436	436	436	436	436	mm
N		1999	1999	1999	1999	1999	1999	1999	1999	mm
O		584	584	584	584	584	584	584	584	mm
P		334	334	334	334	334	334	334	334	mm
Q		186	186	186	186	186	186	186	186	mm
R		156	156	156	156	156	156	156	156	mm
S		121	121	121	121	121	121	121	121	mm
T		137	137	137	137	137	137	137	137	mm
F1		Ø 160	Ø 160	Ø 160	Ø 160	Ø 160	Ø 160	Ø 160	Ø 160	mm
F2		Ø 160	Ø 160	Ø 160	Ø 160	Ø 160	Ø 160	Ø 160	Ø 160	mm
F3		Ø 160	Ø 160	Ø 160	Ø 160	Ø 160	Ø 160	Ø 160	Ø 160	mm
F4		Ø 160	Ø 160	Ø 160	Ø 160	Ø 160	Ø 160	Ø 160	Ø 200	mm
F5		Ø 160	Ø 160	Ø 160	Ø 160	Ø 200	Ø 200	Ø 200	Ø 200	mm
F6		Ø 160	Ø 160	Ø 160	Ø 160	Ø 200	Ø 200	Ø 200	Ø 250	mm
R		Ø 3"				Ø 5"				inch
F		Ø 3"				Ø 5"				inch

7 modules FRONT configuration

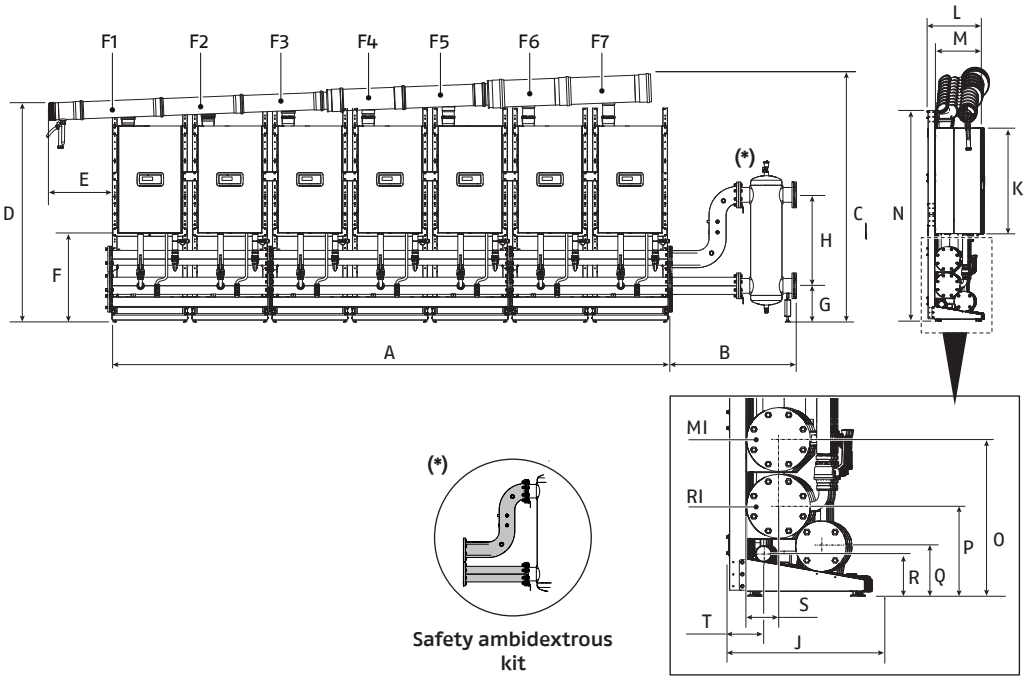

DESCRIPTION		Condexa PRO								
		35 P	50 P	57 P	70 P	90	100	115	135	
A		5230	5230	5230	5230	5230	5230	5230	5230	mm
B	3"	591	591	591	591	591	591	591	591	mm
	5"	1159	1159	1159	1159	1159	1159	1159	1159	mm
C		2439	2439	2295	2295	2295	2295	2490	2490	mm
D		2195	2195	2051	2051	2051	2051	2221	2221	mm
E		594	594	594	594	594	594	594	594	mm
F		834	834	834	834	834	834	834	834	mm
G	3"	230	230	230	230	N.D.	N.D.	N.D.	N.D.	mm
	5"	N.D.	N.D.	N.D.	N.D.	337	337	337	337	mm
H	3"	735	735	735	735	N.D.	N.D.	N.D.	N.D.	mm
	5"	N.D.	N.D.	N.D.	N.D.	850	850	850	850	mm
J		525	525	525	525	525	525	525	525	mm
K		1010	1010	1010	1010	1010	1010	1173	1173	mm
L		511	511	511	511	511	511	511	511	mm
M		436	436	436	436	436	436	436	436	mm
N		1999	1999	1999	1999	1999	1999	1999	1999	mm
O		584	584	584	584	584	584	584	584	mm
P		334	334	334	334	334	334	334	334	mm
Q		186	186	186	186	186	186	186	186	mm
R		156	156	156	156	156	156	156	156	mm
S		121	121	121	121	121	121	121	121	mm
T		137	137	137	137	137	137	137	137	mm
F1		Ø 160	Ø 160	Ø 160	Ø 160	Ø 160	Ø 160	Ø 160	Ø 160	mm
F2		Ø 160	Ø 160	Ø 160	Ø 160	Ø 160	Ø 160	Ø 160	Ø 160	mm
F3		Ø 160	Ø 160	Ø 160	Ø 160	Ø 160	Ø 160	Ø 160	Ø 160	mm
F4		Ø 160	Ø 160	Ø 160	Ø 160	Ø 160	Ø 160	Ø 160	Ø 200	mm
F5		Ø 160	Ø 160	Ø 160	Ø 160	Ø 200	Ø 200	Ø 200	Ø 200	mm
F6		Ø 160	Ø 160	Ø 160	Ø 160	Ø 200	Ø 200	Ø 200	Ø 250	mm
F7		Ø 160	Ø 160	Ø 160	Ø 200	Ø 200	Ø 200	Ø 250	Ø 250	mm
R		Ø 3"				Ø 5"				inch
F		Ø 3"				Ø 5"				inch

8 modules FRONT configuration

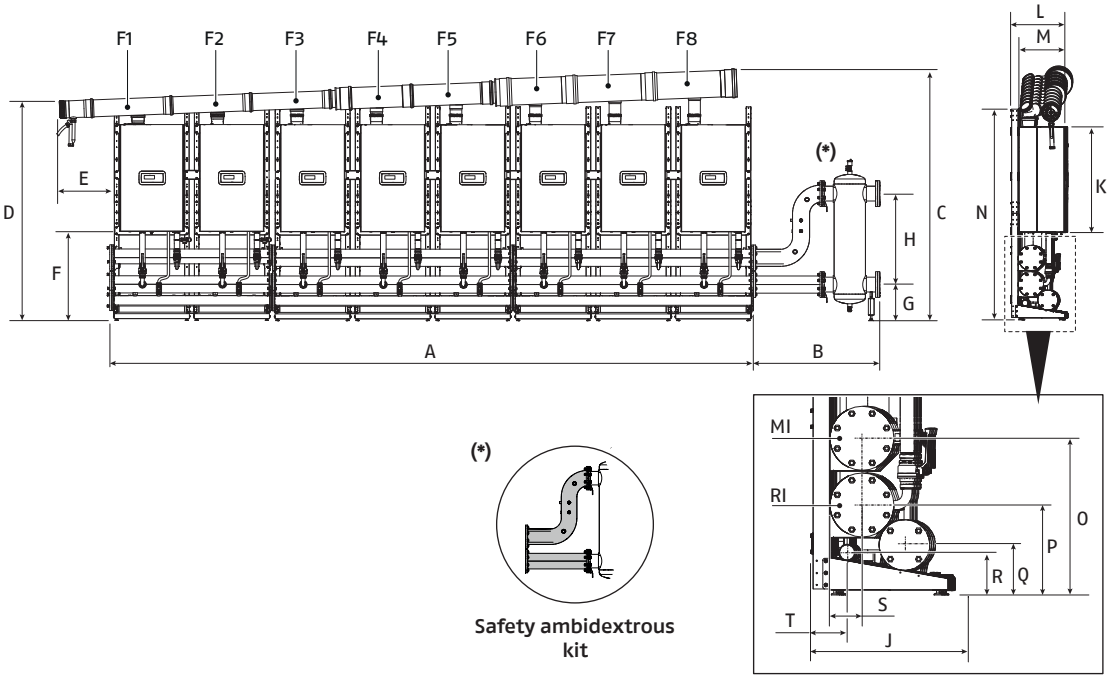

DESCRIPTION		Condexa PRO								
		35 P	50 P	57 P	70 P	90	100	115	135	
A		5978	5978	5978	5978	5978	5978	5978	5978	mm
B		1159	1159	1159	1159	1159	1159	1159	1159	mm
C		2490	2490	2346	2346	2346	2346	2519	2519	mm
D		2195	2195	2051	2051	2051	2051	2221	2221	mm
E		594	594	594	594	594	594	594	594	mm
F		834	834	834	834	834	834	834	834	mm
G	3″	230	230	230	N.D.	N.D.	N.D.	N.D.	N.D.	mm
	5″	N.D.	N.D.	N.D.	337	337	337	337	337	mm
H	3″	735	735	735	N.D.	N.D.	N.D.	N.D.	N.D.	mm
	5″	N.D.	N.D.	N.D.	850	850	850	850	850	mm
J		525	525	525	525	525	525	525	525	mm
K		1010	1010	1010	1010	1010	1010	1173	1173	mm
L		511	511	511	511	511	511	511	511	mm
M		436	436	436	436	436	436	436	436	mm
N		1999	1999	1999	1999	1999	1999	1999	1999	mm
O		584	584	584	584	584	584	584	584	mm
P		334	334	334	334	334	334	334	334	mm
Q		186	186	186	186	186	186	186	186	mm
R		156	156	156	156	156	156	156	156	mm
S		121	121	121	121	121	121	121	121	mm
T		137	137	137	137	137	137	137	137	mm
F1		Ø 160	Ø 160	Ø 160	Ø 160	Ø 160	Ø 160	Ø 160	Ø 160	mm
F2		Ø 160	Ø 160	Ø 160	Ø 160	Ø 160	Ø 160	Ø 160	Ø 160	mm
F3		Ø 160	Ø 160	Ø 160	Ø 160	Ø 160	Ø 160	Ø 160	Ø 160	mm
F4		Ø 160	Ø 160	Ø 160	Ø 160	Ø 160	Ø 160	Ø 160	Ø 200	mm
F5		Ø 160	Ø 160	Ø 160	Ø 160	Ø 200	Ø 200	Ø 200	Ø 200	mm
F6		Ø 160	Ø 160	Ø 160	Ø 160	Ø 200	Ø 200	Ø 200	Ø 250	mm
F7		Ø 160	Ø 160	Ø 160	Ø 200	Ø 200	Ø 200	Ø 250	Ø 250	mm
F8		Ø 160	Ø 160	Ø 200	Ø 200	Ø 250	Ø 250	Ø 250	Ø 250	mm
R			Ø 3″				Ø 5″			inch
F			Ø 3″				Ø 5″			inch

9 modules FR0NT configuration

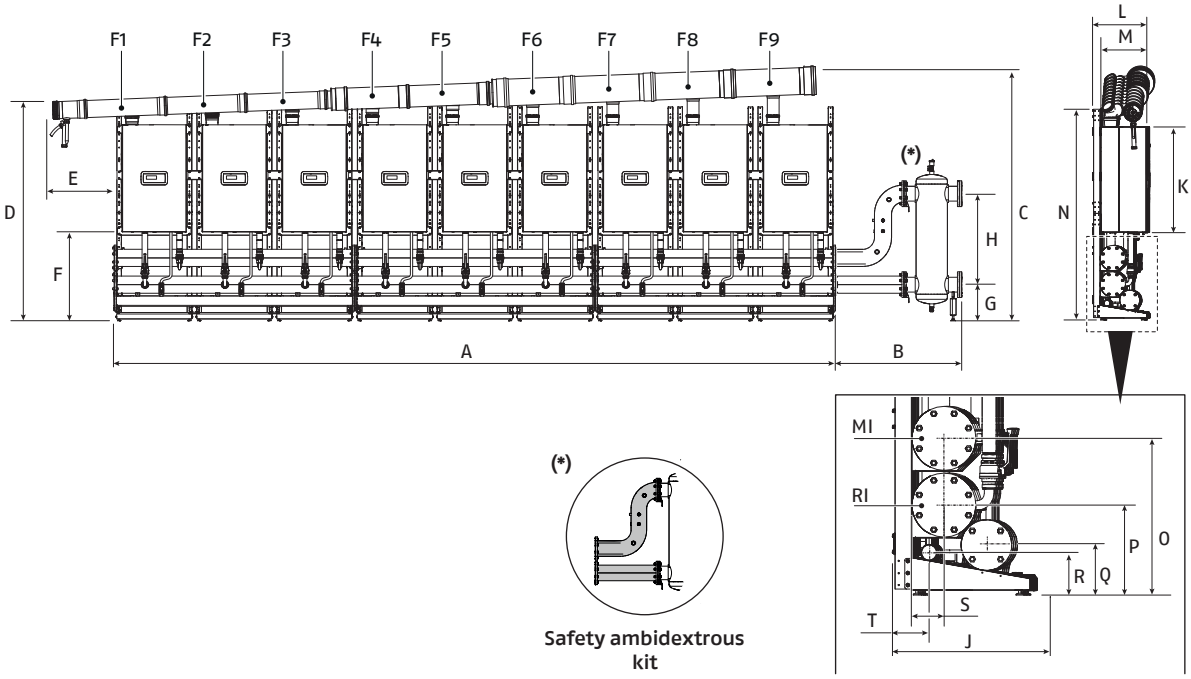

DESCRIPTION		Condexa PRO								
		35 P	50 P	57 P	70 P	90	100	115	135	
A		6726	6726	6726	6726	6726	6726	6726	N.D.	mm
B		1159	1159	1159	1159	1159	1159	1159	N.D.	mm
C		2520	2520	2376	2376	2376	2376	2548	N.D.	mm
D		2195	2195	2051	2051	2051	2051	2221	N.D.	mm
E		594	594	594	594	594	594	594	N.D.	mm
F		834	834	834	834	834	834	834	N.D.	mm
G	3"	230	230	N.D.	N.D.	N.D.	N.D.	N.D.	N.D.	mm
	5"	N.D.	N.D.	337	337	337	337	337	N.D.	mm
H	3"	735	735	N.D.	N.D.	N.D.	N.D.	N.D.	N.D.	mm
	5"	N.D.	N.D.	850	850	850	850	850	N.D.	mm
J		525	525	525	525	525	525	525	N.D.	mm
K		1010	1010	1010	1010	1010	1010	1173	N.D.	mm
L		511	511	511	511	511	511	511	N.D.	mm
M		436	436	436	436	436	436	436	N.D.	mm
N		1999	1999	1999	1999	1999	1999	1999	N.D.	mm
O		584	584	584	584	584	584	584	N.D.	mm
P		334	334	334	334	334	334	334	N.D.	mm
Q		186	186	186	186	186	186	186	N.D.	mm
R		156	156	156	156	156	156	156	N.D.	mm
S		121	121	121	121	121	121	121	N.D.	mm
T		137	137	137	137	137	137	137	N.D.	mm
F1		Ø 160	Ø 160	Ø 160	Ø 160	Ø 160	Ø 160	Ø 160	N.D.	mm
F2		Ø 160	Ø 160	Ø 160	Ø 160	Ø 160	Ø 160	Ø 160	N.D.	mm
F3		Ø 160	Ø 160	Ø 160	Ø 160	Ø 160	Ø 160	Ø 160	N.D.	mm
F4		Ø 160	Ø 160	Ø 160	Ø 160	Ø 160	Ø 160	Ø 160	N.D.	mm
F5		Ø 160	Ø 160	Ø 160	Ø 160	Ø 200	Ø 200	Ø 200	N.D.	mm
F6		Ø 160	Ø 160	Ø 160	Ø 160	Ø 200	Ø 200	Ø 200	N.D.	mm
F7		Ø 160	Ø 160	Ø 160	Ø 200	Ø 200	Ø 200	Ø 250	N.D.	mm
F8		Ø 160	Ø 160	Ø 200	Ø 200	Ø 250	Ø 250	Ø 250	N.D.	mm
F9		Ø 160	Ø 200	Ø 200	Ø 200	Ø 250	Ø 250	Ø 250	N.D.	mm
R		Ø 3"				Ø 5"				inch
F		Ø 3"				Ø 5"				inch

10 modules FRONT configuration

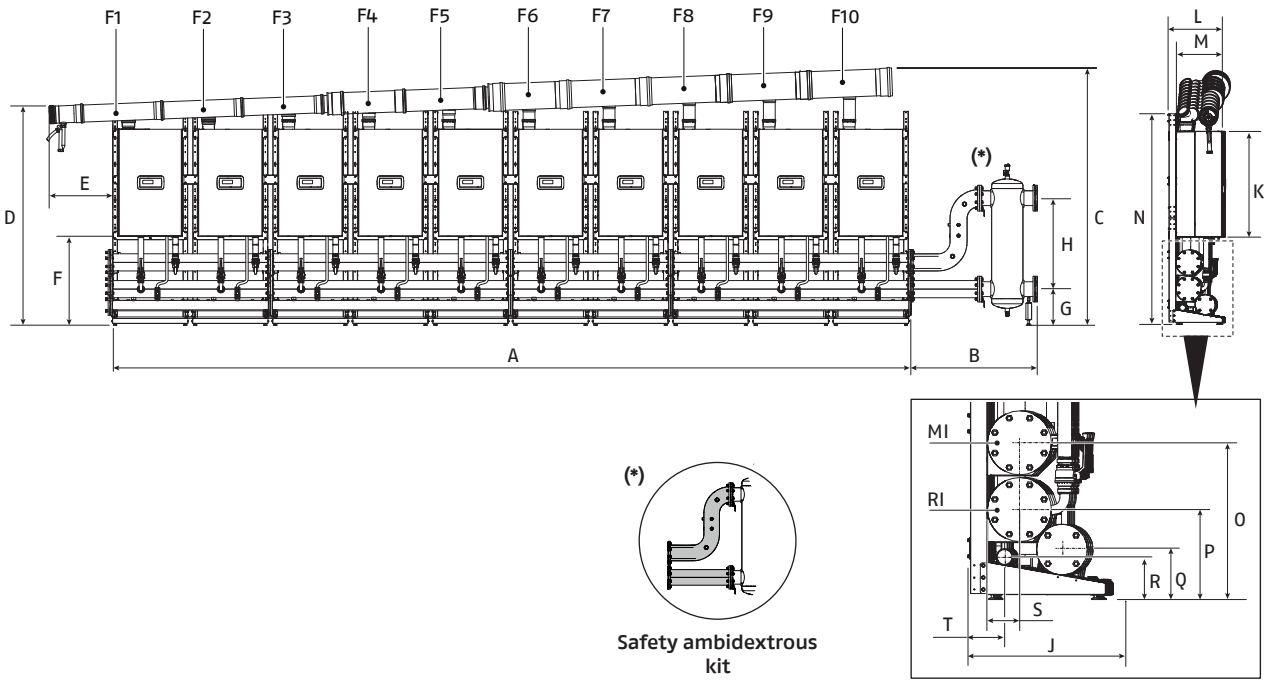

DESCRIPTION		Condexa PRO								
		35 P	50 P	57 P	70 P	90	100	115	135	
A		7472	7472	7472	7472	7472	7472	7472	N.D.	mm
B		1159	1159	1159	1159	1159	1159	1159	N.D.	mm
C		2549	2549	2405	2405	2405	2405	2578	N.D.	mm
D		2195	2195	2051	2051	2051	2051	2221	N.D.	mm
E		594	594	594	594	594	594	594	N.D.	mm
F		834	834	834	834	834	834	834	N.D.	mm
G	3"	230	N.D.	N.D.	N.D.	N.D.	N.D.	N.D.	N.D.	mm
	5"	N.D.	337	337	337	337	337	337	N.D.	mm
H	3"	735	N.D.	N.D.	N.D.	N.D.	N.D.	N.D.	N.D.	mm
	5"	N.D.	850	850	850	850	850	850	N.D.	mm
J		525	525	525	525	525	525	525	N.D.	mm
K		1010	1010	1010	1010	1010	1010	1173	N.D.	mm
L		511	511	511	511	511	511	511	N.D.	mm
M		436	436	436	436	436	436	436	N.D.	mm
N		1999	1999	1999	1999	1999	1999	1999	N.D.	mm
O		584	584	584	584	584	584	584	N.D.	mm
P		334	334	334	334	334	334	334	N.D.	mm
Q		186	186	186	186	186	186	186	N.D.	mm
R		156	156	156	156	156	156	156	N.D.	mm
S		121	121	121	121	121	121	121	N.D.	mm
T		137	137	137	137	137	137	137	N.D.	mm
F1		Ø 160	Ø 160	Ø 160	Ø 160	Ø 160	Ø 160	Ø 160	N.D.	mm
F2		Ø 160	Ø 160	Ø 160	Ø 160	Ø 160	Ø 160	Ø 160	N.D.	mm
F3		Ø 160	Ø 160	Ø 160	Ø 160	Ø 160	Ø 160	Ø 160	N.D.	mm
F4		Ø 160	Ø 160	Ø 160	Ø 160	Ø 160	Ø 160	Ø 160	N.D.	mm
F5		Ø 160	Ø 160	Ø 160	Ø 160	Ø 200	Ø 200	Ø 200	N.D.	mm
F6		Ø 160	Ø 160	Ø 160	Ø 160	Ø 200	Ø 200	Ø 200	N.D.	mm
F7		Ø 160	Ø 160	Ø 160	Ø 200	Ø 200	Ø 200	Ø 250	N.D.	mm
F8		Ø 160	Ø 160	Ø 200	Ø 200	Ø 250	Ø 250	Ø 250	N.D.	mm
F9		Ø 160	Ø 200	Ø 200	Ø 200	Ø 250	Ø 250	Ø 250	N.D.	mm
F10		Ø 160	Ø 200	Ø 200	Ø 200	Ø 250	Ø 250	Ø 250	N.D.	mm
R		Ø 3"				Ø 5"				inch
F		Ø 3"				Ø 5"				inch

2 modules BACK-TO-BACK configuration

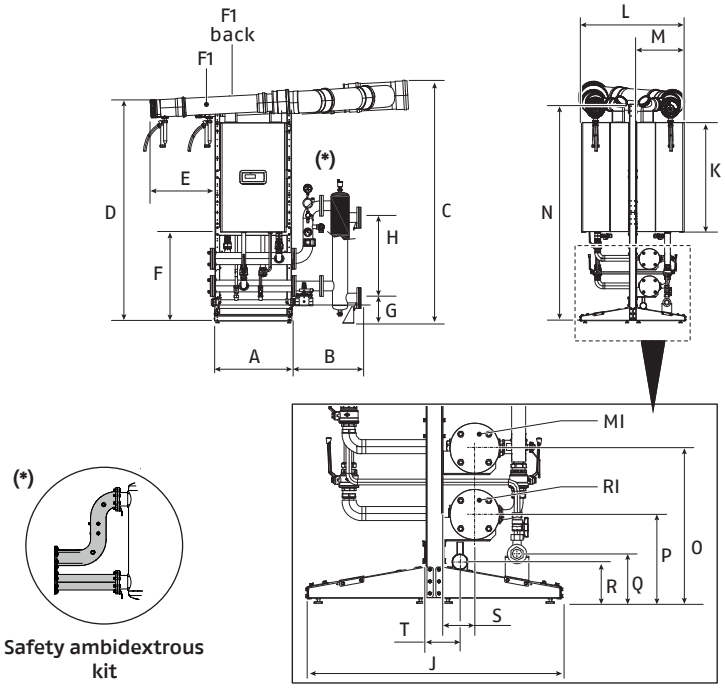

DESCRIPTION	Condexa PRO								
	35 P	50 P	57 P	70 P	90	100	115	135	
A	746	746	746	746	746	746	746	746	mm
B	591	591	591	591	591	591	591	591	mm
C	2364	2364	2220	2220	2220	2220	2390	2390	mm
D	2195	2195	2051	2051	2051	2051	2221	2221	mm
E	594	594	594	594	594	594	594	594	mm
F	834	834	834	834	834	834	834	834	mm
G	230	230	230	230	230	230	230	230	mm
H	735	735	735	735	735	735	735	735	mm
J	969	969	969	969	969	969	969	969	mm
K	1010	1010	1010	1010	1010	1010	1173	1173	mm
L	942	942	942	942	942	942	942	942	mm
M	436	436	436	436	436	436	436	436	mm
N	1999	1999	1999	1999	1999	1999	1999	1999	mm
O	584	584	584	584	584	584	584	584	mm
P	334	334	334	334	334	334	334	334	mm
Q	186	186	186	186	186	186	186	186	mm
R	156	156	156	156	156	156	156	156	mm
S	121	121	121	121	121	121	121	121	mm
T	137	137	137	137	137	137	137	137	mm
F1	Ø 160	Ø 160	Ø 160	Ø 160	Ø 160	Ø 160	Ø 160	Ø 160	mm
F1 back	Ø 160	Ø 160	Ø 160	Ø 160	Ø 160	Ø 160	Ø 160	Ø 160	mm
R	Ø 3"								inch
F	Ø 3"								inch

3/4 modules BACK-TO-BACK configuration

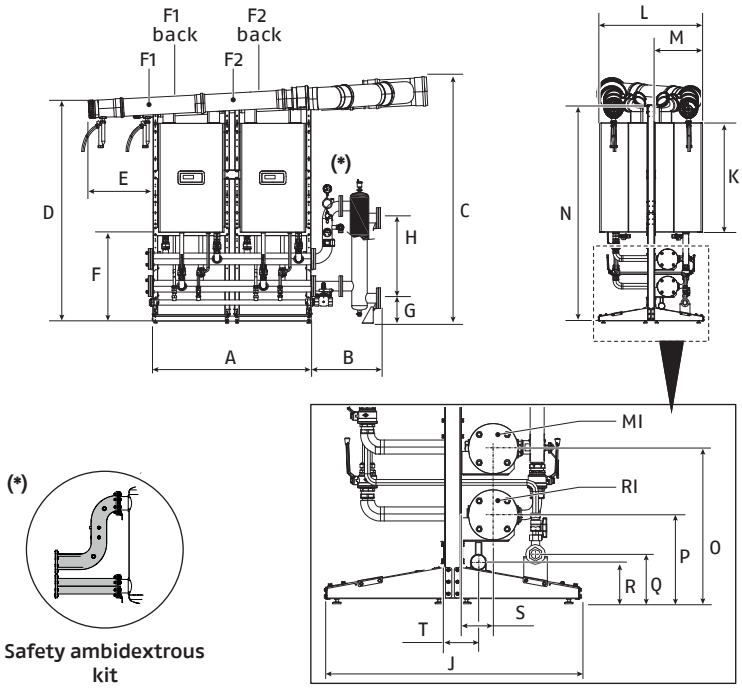

DESCRIPTION		Condexa PRO								
		35 P	50 P	57 P	70 P	90	100	115	135	
A		1494	1494	1494	1494	1494	1494	1494	1494	mm
B	3"	591	591	591	591	591	591	591	591	mm
	5"	1159	1159	1159	1159	1159	1159	1159	1159	mm
C		2404	2404	2260	2260	2260	2260	2430	2430	mm
D		2195	2195	2051	2051	2051	2051	2221	2221	mm
E		594	594	594	594	594	594	594	594	mm
F		834	834	834	834	834	834	834	834	mm
G	3"	230	230	230	230	230	230	230	230	mm
	5"	N.D.	N.D.	N.D.	N.D.	N.D.	N.D.	N.D.	337	mm
H	3"	735	735	735	735	735	735	735	735	mm
	5"	N.D.	N.D.	N.D.	N.D.	N.D.	N.D.	N.D.	850	mm
J		969	969	969	969	969	969	969	969	mm
K		1010	1010	1010	1010	1010	1010	1173	1173	mm
L		942	942	942	942	942	942	942	942	mm
M		436	436	436	436	436	436	436	436	mm
N		1999	1999	1999	1999	1999	1999	1999	1999	mm
O		584	584	584	584	584	584	584	584	mm
P		334	334	334	334	334	334	334	334	mm
Q		186	186	186	186	186	186	186	186	mm
R		156	156	156	156	156	156	156	156	mm
S		121	121	121	121	121	121	121	121	mm
T		137	137	137	137	137	137	137	137	mm
F1		Ø 160	Ø 160	Ø 160	Ø 160	Ø 160	Ø 160	Ø 160	Ø 160	mm
F1 back		Ø 160	Ø 160	Ø 160	Ø 160	Ø 160	Ø 160	Ø 160	Ø 160	mm
F2		Ø 160	Ø 160	Ø 160	Ø 160	Ø 160	Ø 160	Ø 160	Ø 160	mm
F2 back		Ø 160	Ø 160	Ø 160	Ø 160	Ø 160	Ø 160	Ø 160	Ø 160	mm
R	3 modules				Ø 3"				Ø 3"	inch
	4 modules				Ø 3"				Ø 5"	inch
F	3 modules				Ø 3"				Ø 3"	inch
	4 modules				Ø 3"				Ø 5"	inch

5/6 modules BACK-TO-BACK configuration

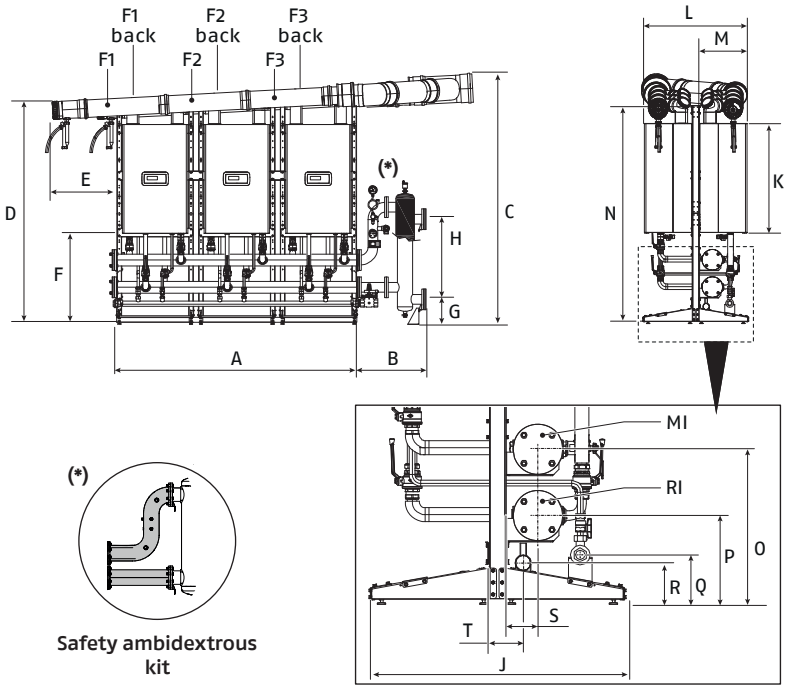

DESCRIPTION		Condexa PRO								
		35 P	50 P	57 P	70 P	90	100	115	135	
A		2242	2242	2242	2242	2242	2242	2242	2242	mm
B	3"	591	591	591	591	591	591	591	591	mm
	5"	1159	1159	1159	1159	1159	1159	1159	1159	mm
C		2443	2443	2299	2299	2299	2299	2469	2469	mm
D		2195	2195	2051	2051	2051	2051	2221	2221	mm
E		594	594	594	594	594	594	594	594	mm
F		834	834	834	834	834	834	834	834	mm
G	3"	230	230	230	230	230	230	N.D.	N.D.	mm
	5"	N.D.	N.D.	N.D.	N.D.	337	337	337	337	mm
H	3"	735	735	735	735	735	735	N.D.	N.D.	mm
	5"	N.D.	N.D.	N.D.	N.D.	850	850	850	850	mm
J		969	969	969	969	969	969	969	969	mm
K		1010	1010	1010	1010	1010	1010	1173	1173	mm
L		942	942	942	942	942	942	942	942	mm
M		436	436	436	436	436	436	436	436	mm
N		1999	1999	1999	1999	1999	1999	1999	1999	mm
O		584	584	584	584	584	584	584	584	mm
P		334	334	334	334	334	334	334	334	mm
Q		186	186	186	186	186	186	186	186	mm
R		156	156	156	156	156	156	156	156	mm
S		121	121	121	121	121	121	121	121	mm
T		137	137	137	137	137	137	137	137	mm
F1		Ø 160	Ø 160	Ø 160	Ø 160	Ø 160	Ø 160	Ø 160	Ø 160	mm
F1 back		Ø 160	Ø 160	Ø 160	Ø 160	Ø 160	Ø 160	Ø 160	Ø 160	mm
F2		Ø 160	Ø 160	Ø 160	Ø 160	Ø 160	Ø 160	Ø 160	Ø 160	mm
F2 back		Ø 160	Ø 160	Ø 160	Ø 160	Ø 160	Ø 160	Ø 160	Ø 160	mm
F3		Ø 160	Ø 160	Ø 160	Ø 160	Ø 160	Ø 160	Ø 160	Ø 160	mm
F3 back		Ø 160	Ø 160	Ø 160	Ø 160	Ø 160	Ø 160	Ø 160	Ø 160	mm
R	5 modules	Ø 3"				Ø 3"		Ø 5"		inch
	6 modules	Ø 3"				Ø 5"		Ø 5"		inch
F	5 modules	Ø 3"				Ø 3"		Ø 5"		inch
	6 modules	Ø 3"				Ø 5"		Ø 5"		inch

7/8 modules BACK-TO-BACK configuration

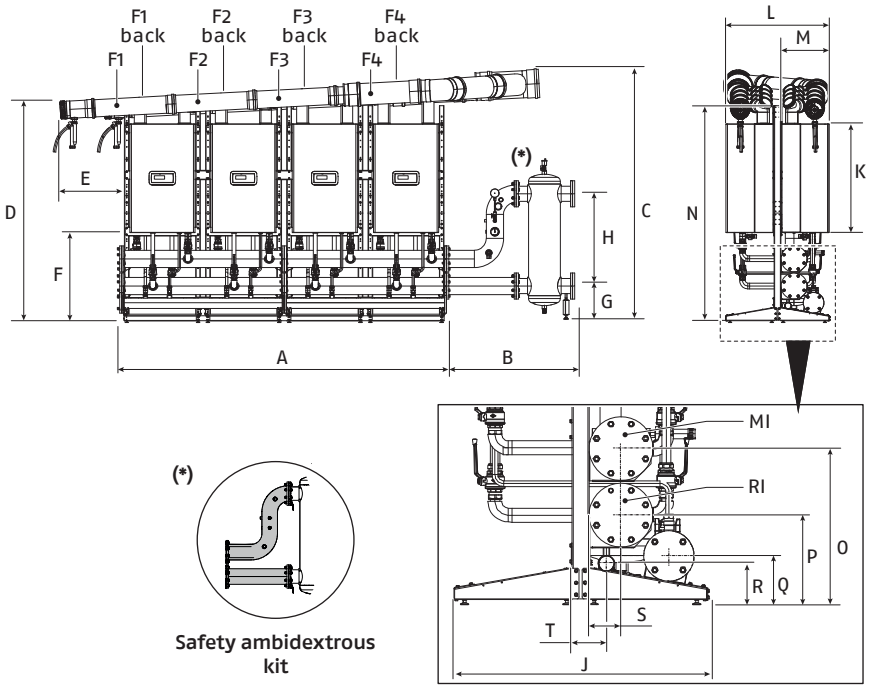

Safety ambidextrous kit

DESCRIPTION		Condexa PRO								
		35 P	50 P	57 P	70 P	90	100	115	135	
A		2988	2988	2988	2988	2988	2988	2988	2988	mm
B	3"	591	591	591	591	591	591	591	591	mm
	5"	1159	1159	1159	1159	1159	1159	1159	1159	mm
C		2483	2483	2339	2339	2339	2339	2509	2509	mm
D		2195	2195	2051	2051	2051	2051	2221	2221	mm
E		594	594	594	594	594	594	594	594	mm
F		834	834	834	834	834	834	834	834	mm
G	3"	230	230	230	230	N.D.	N.D.	N.D.	N.D.	mm
	5"	N.D.	N.D.	N.D.	337	337	337	337	337	mm
H	3"	735	735	735	735	N.D.	N.D.	N.D.	N.D.	mm
	5"	N.D.	N.D.	N.D.	850	850	850	850	850	mm
J		969	969	969	969	969	969	969	969	mm
K		1010	1010	1010	1010	1010	1010	1173	1173	mm
L		942	942	942	942	942	942	942	942	mm
M		436	436	436	436	436	436	436	436	mm
N		1999	1999	1999	1999	1999	1999	1999	1999	mm
O		584	584	584	584	584	584	584	584	mm
P		334	334	334	334	334	334	334	334	mm
Q		186	186	186	186	186	186	186	186	mm
R		156	156	156	156	156	156	156	156	mm
S		121	121	121	121	121	121	121	121	mm
T		137	137	137	137	137	137	137	137	mm
F1		Ø 160	Ø 160	Ø 160	Ø 160	Ø 160	Ø 160	Ø 160	Ø 160	mm
F1 back		Ø 160	Ø 160	Ø 160	Ø 160	Ø 160	Ø 160	Ø 160	Ø 160	mm
F2		Ø 160	Ø 160	Ø 160	Ø 160	Ø 160	Ø 160	Ø 160	Ø 160	mm
F2 back		Ø 160	Ø 160	Ø 160	Ø 160	Ø 160	Ø 160	Ø 160	Ø 160	mm
F3		Ø 160	Ø 160	Ø 160	Ø 160	Ø 160	Ø 160	Ø 160	Ø 160	mm
F3 back		Ø 160	Ø 160	Ø 160	Ø 160	Ø 160	Ø 160	Ø 160	Ø 160	mm
F4		Ø 160	Ø 160	Ø 160	Ø 160	Ø 160	Ø 160	Ø 160	Ø 200	mm
F4 back		Ø 160	Ø 160	Ø 160	Ø 160	Ø 160	Ø 160	Ø 160	Ø 200	mm
R	7 modules	Ø 3"			Ø 3"	Ø 5"				inch
	8 modules	Ø 3"			Ø 5"	Ø 5"				inch
F	7 modules	Ø 3"			Ø 3"	Ø 5"				inch
	8 modules	Ø 3"			Ø 5"	Ø 5"				inch

9/10 modules BACK-TO-BACK configuration

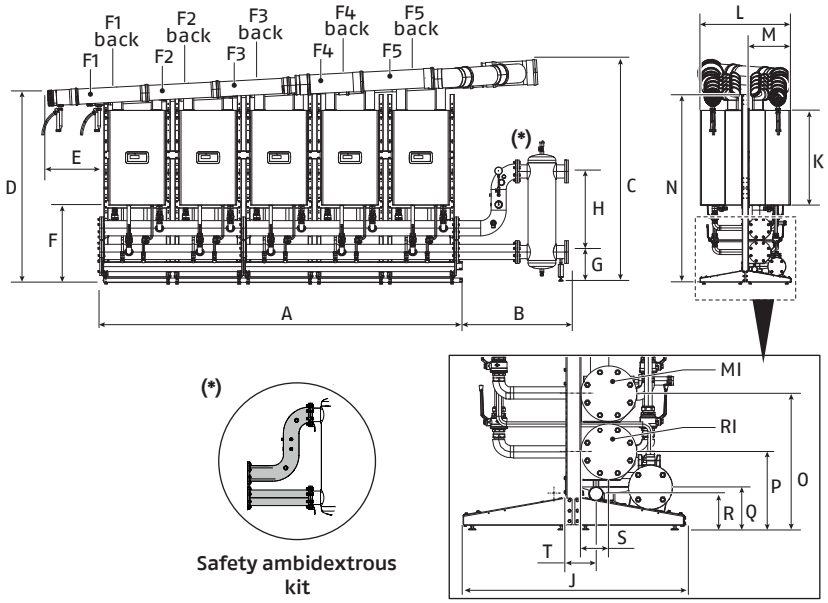

DESCRIPTION			Condexa PRO								
			35 P	50 P	57 P	70 P	90	100	115	135	
A			3736	3736	3736	3736	3736	3736	3736	N.D.	mm
B			1159	1159	1159	1159	1159	1159	1159	N.D.	mm
C			2511	2511	2367	2367	2367	2367	2537	N.D.	mm
D			2195	2195	2051	2051	2051	2051	2221	N.D.	mm
E			594	594	594	594	594	594	594	N.D.	mm
F			834	834	834	834	834	834	834	N.D.	mm
G	9 modules	3"	230	230	N.D.	N.D.	N.D.	N.D.	N.D.	N.D.	mm
		5"	N.D.	337	337	337	337	337	337	N.D.	mm
	10 modules	3"	230	230	N.D.	N.D.	N.D.	N.D.	N.D.	N.D.	mm
		5"	N.D.	337	337	337	337	337	337	N.D.	mm
H	9 modules	3"	735	735	N.D.	N.D.	N.D.	N.D.	N.D.	N.D.	mm
		5"	N.D.	850	850	850	850	850	850	N.D.	mm
	10 modules	3"	735	735	N.D.	N.D.	N.D.	N.D.	N.D.	N.D.	mm
		5"	N.D.	850	850	850	850	850	850	N.D.	mm
J			969	969	969	969	969	969	969	N.D.	mm
K			1010	1010	1010	1010	1010	1010	1173	N.D.	mm
L			942	942	942	942	942	942	942	N.D.	mm
M			436	436	436	436	436	436	436	N.D.	mm
N			1999	1999	1999	1999	1999	1999	1999	N.D.	mm
O			584	584	584	584	584	584	584	N.D.	mm
P			334	334	334	334	334	334	334	N.D.	mm
Q			186	186	186	186	186	186	186	N.D.	mm
R			156	156	156	156	156	156	156	N.D.	mm
S			121	121	121	121	121	121	121	N.D.	mm
T			137	137	137	137	137	137	137	N.D.	mm
F1			Ø 160	Ø 160	Ø 160	Ø 160	Ø 160	Ø 160	Ø 160	N.D.	mm
F1 back			Ø 160	Ø 160	Ø 160	Ø 160	Ø 160	Ø 160	Ø 160	N.D.	mm
F2			Ø 160	Ø 160	Ø 160	Ø 160	Ø 160	Ø 160	Ø 160	N.D.	mm
F2 back			Ø 160	Ø 160	Ø 160	Ø 160	Ø 160	Ø 160	Ø 160	N.D.	mm
F3			Ø 160	Ø 160	Ø 160	Ø 160	Ø 160	Ø 160	Ø 160	N.D.	mm
F3 back			Ø 160	Ø 160	Ø 160	Ø 160	Ø 160	Ø 160	Ø 160	N.D.	mm
F4			Ø 160	Ø 160	Ø 160	Ø 160	Ø 160	Ø 160	Ø 160	N.D.	mm
F4 back			Ø 160	Ø 160	Ø 160	Ø 160	Ø 160	Ø 160	Ø 160	N.D.	mm
F5			Ø 160	Ø 160	Ø 160	Ø 160	Ø 200	Ø 200	Ø 200	N.D.	mm
F5 back			Ø 160	Ø 160	Ø 160	Ø 160	Ø 200	Ø 200	Ø 200	N.D.	mm
R	9 modules		Ø 3"	Ø 3"	Ø 5"						inch
	10 modules		Ø 3"	Ø 5"	Ø 5"						inch
F	9 modules		Ø 3"	Ø 3"	Ø 5"						inch
	10 modules		Ø 3"	Ø 5"	Ø 5"						inch

Connection to the plate heat exchanger

The kit is ambidextrous and contains both the connections to the plate heat exchanger and the exchanger support frame.
There are hydraulic connections for connecting a storage tank charge pump.

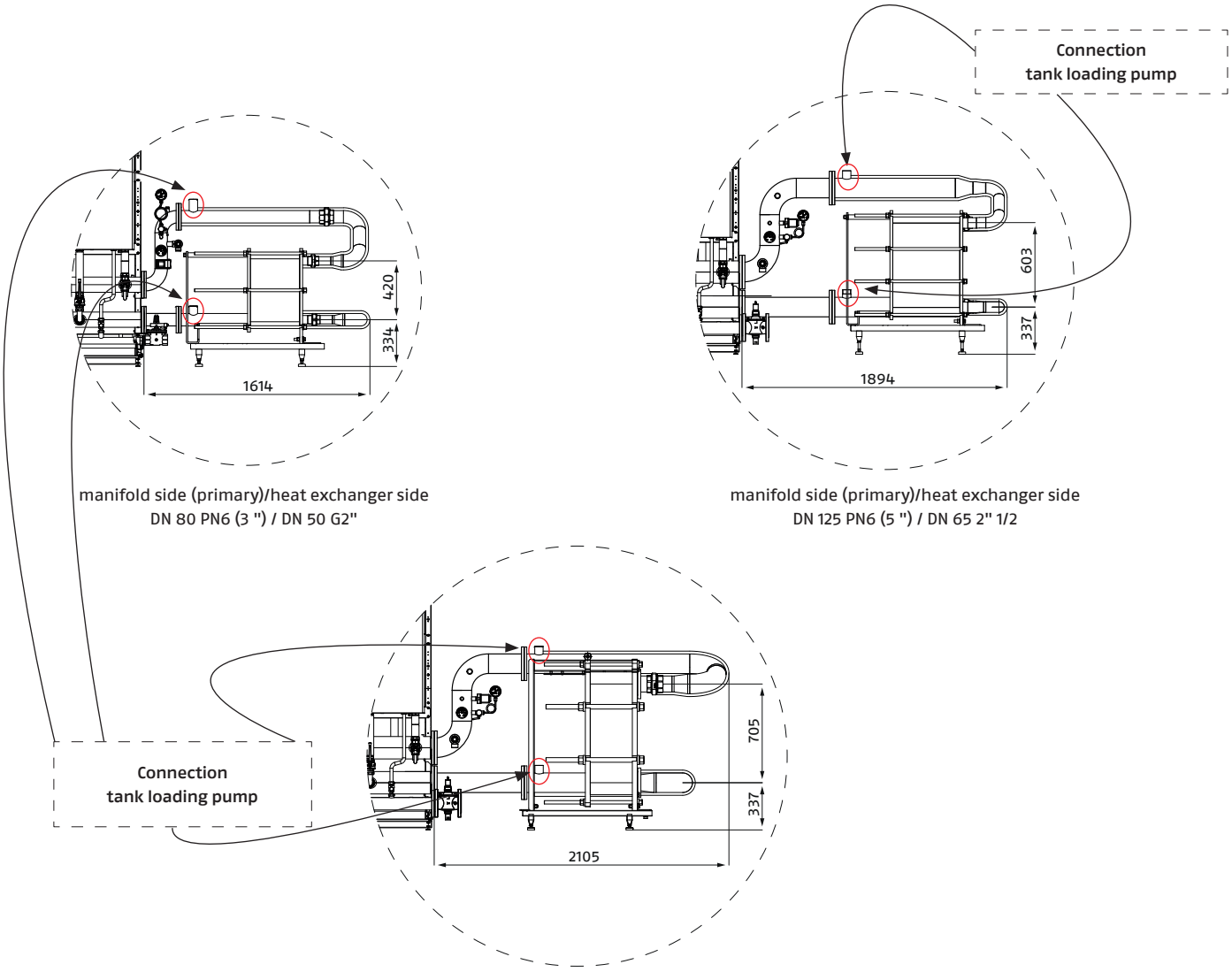

manifold side (primary)/heat exchanger side
DN 80 PN6 (3 ") / DN 50 G2"

manifold side (primary)/heat exchanger side
DN 125 PN6 (5 ") / DN 65 2" 1/2

manifold side (primary)/heat exchanger side
DN 125 PN6 (5 ") / DN 100 PN16

No. of modules	Condexa PRO							
	35 P	50 P	57 P	70 P	90	100	115	135
2	(3") DN80 PN6 / DN50 G2"							
3								
4								(5") DN125 PN6 / DN65 G2" 1/2
5					(5") DN125 PN6 / DN65 G2" 1/2			
6								
7				(5") DN125 PN6 / DN65 G2" 1/2				(5") DN125 PN6 / DN100 PN16
8							(5") DN125 PN6 / DN100 PN16	
9			(5") DN125 PN6 / DN65 G2" 1/2			(5") DN125 PN6 / DN100 PN16		ND
10		(5") DN125 PN6 / DN65 G2" 1/2			(5") DN125 PN6 / DN100 PN16			ND

CONDEXA PRO CASCADE ON HIGH TEMPERATURE SYSTEMS

Description

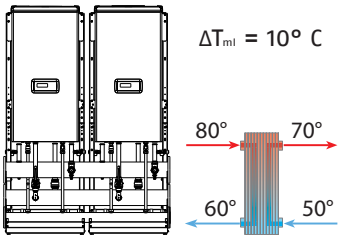

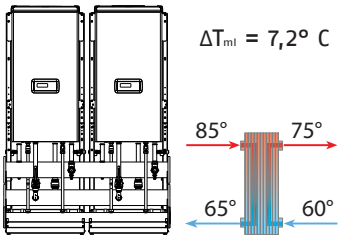

No. of cascade generators	Model	Useful heat output [kW]	Heat exchanger	DN	Heat exchanger	DN
2	Condexa Pro 2x 35 P	70	SP 35 - DN50 25 (25A) N	DN50	SP 35 - DN50 25 (25A) N	DN50
	Condexa Pro 2x 50 P	100	SP 35 - DN50 25 (25A) N	DN50	SP 35 - DN50 31 (31A) N	DN50
	Condexa Pro 2x 57 P	114	SP 35 - DN50 25 (25A) N	DN50	SP 35 - DN50 35 (35A) N	DN50
	Condexa Pro 2x 70 P	136	SP 35 - DN50 25 (25A) N	DN50	SP 35 - DN50 39 (39A) N	DN50
	Condexa Pro 2x 90	180	SP 35 - DN50 31 (31A) N	DN50	SP 35 - DN50 49 (49A) N	DN50
	Condexa Pro 2x 100	194	SP 35 - DN50 35 (35A) N	DN50	SP 35 - DN50 57 (57A) N	DN50
	Condexa Pro 2x 115	224	SP 35 - DN50 39 (39A) N	DN50	SP 35 - DN50 65 (65A) N	DN50
	Condexa Pro 2x 135	262	SP 35 - DN50 45 (45A) N	DN50	SP 35 - DN50 75 (75A) N	DN50
3	Condexa Pro 3x 35 P	105	SP 35 - DN50 25 (25A) N	DN50	SP 35 - DN50 31 (31A) N	DN50
	Condexa Pro 3x 50 P	150	SP 35 - DN50 25 (25A) N	DN50	SP 35 - DN50 39 (39A) N	DN50
	Condexa Pro 3x 57 P	171	SP 35 - DN50 31 (31A) N	DN50	SP 35 - DN50 49 (49A) N	DN50
	Condexa Pro 3x 70 P	204	SP 35 - DN50 35 (35A) N	DN50	SP 35 - DN50 57 (57A) N	DN50
	Condexa Pro 3x 90	270	SP 35 - DN50 45 (45A) N	DN50	SP 35 - DN50 75 (75A) N	DN50
	Condexa Pro 3x 100	291	SP 35 - DN50 49 (49A) N	DN50	SP 35 - DN50 81 (81A) N	DN50
	Condexa Pro 3x 115	336	SP 35 - DN50 57 (57A) N	DN50	SP 35 - DN50 93 (93A) N	DN50
	Condexa Pro 3x 135	393	SP 35 - DN50 65 (65A) N	DN50	SP 35 - DN50 105 (105A) N	DN50
4	Condexa Pro 4x 35 P	140	SP 35 - DN50 25 (25A) N	DN50	SP 35 - DN50 39 (39A) N	DN50
	Condexa Pro 4x 50 P	200	SP 35 - DN50 31 (31A) N	DN50	SP 35 - DN50 49 (49A) N	DN50
	Condexa Pro 4x 57 P	228	SP 35 - DN50 39 (39A) N	DN50	SP 35 - DN50 65 (65A) N	DN50
	Condexa Pro 4x 70 P	272	SP 35 - DN50 45 (45A) N	DN50	SP 35 - DN50 75 (75A) N	DN50
	Condexa Pro 4x 90	360	SP 35 - DN50 57 (57A) N	DN50	SP 35 - DN50 93 (93A) N	DN50
	Condexa Pro 4x 100	388	SP 35 - DN50 65 (65A) N	DN50	SP 35 - DN50 105 (105A) N	DN50
	Condexa Pro 4x 115	448	SP 35 - DN50 75 (75A) N	DN50	SP 35 - DN50 121 (121A) N	DN50
	Condexa Pro 4x 135	524	SP 40 - DN65 59 (59A) N	DN65	SP 40 - DN65 99 (99A) N	DN65
5	Condexa Pro 5x 35 P	175	SP 35 - DN50 31 (31A) N	DN50	SP 35 - DN50 49 (49A) N	DN50
	Condexa Pro 5x 50 P	250	SP 35 - DN50 39 (39A) N	DN50	SP 35 - DN50 65 (65A) N	DN50
	Condexa Pro 5x 57 P	285	SP 35 - DN50 49 (49A) N	DN50	SP 35 - DN50 75 (75A) N	DN50
	Condexa Pro 5x 70 P	340	SP 35 - DN50 57 (57A) N	DN50	SP 35 - DN50 93 (93A) N	DN50
	Condexa Pro 5x 90	450	SP 35 - DN50 75 (75A) N	DN50	SP 35 - DN50 121 (121A) N	DN50
	Condexa Pro 5x 100	485	SP 35 - DN50 81 (81A) N	DN50	SP 35 - DN50 121 (121A) N	DN50
	Condexa Pro 5x 115	560	SP 40 - DN65 67 (67A) N	DN65	SP 40 - DN65 99 (99A) N	DN65
	Condexa Pro 5x 135	655	SP 40 - DN65 75 (75A) N	DN65	SP 40 - DN65 121 (121A) N	DN65
6	Condexa Pro 6x 35 P	209	SP 35 - DN50 35 (35A) N	DN50	SP 35 - DN50 57 (57A) N	DN50
	Condexa Pro 6x 50 P	300	SP 35 - DN50 45 (45A) N	DN50	SP 35 - DN50 75 (75A) N	DN50
	Condexa Pro 6x 57 P	342	SP 35 - DN50 57 (57A) N	DN50	SP 35 - DN50 93 (93A) N	DN50
	Condexa Pro 6x 70 P	408	SP 35 - DN50 65 (65A) N	DN50	SP 35 - DN50 105 (105A) N	DN50
	Condexa Pro 6x 90	540	SP 40 - DN65 67 (67A) N	DN65	SP 40 - DN65 99 (99A) N	DN65
	Condexa Pro 6x 100	582	SP 40 - DN65 67 (67A) N	DN65	SP 40 - DN65 111 (111A) N	DN65
	Condexa Pro 6x 115	672	SP 40 - DN65 75 (75A) N	DN65	SP 40 - DN65 121 (121A) N	DN65
	Condexa Pro 6x 135	786	SP 40 - DN65 93 (93A) N	DN65	SP 40 - DN65 145 (145A) N	DN65
7	Condexa Pro 7x 35 P	244	SP 35 - DN50 45 (45A) N	DN50	SP 35 - DN50 65 (65A) N	DN50
	Condexa Pro 7x 50 P	350	SP 35 - DN50 57 (57A) N	DN50	SP 35 - DN50 93 (93A) N	DN50
	Condexa Pro 7x 57 P	399	SP 35 - DN50 65 (65A) N	DN50	SP 35 - DN50 105 (105A) N	DN50
	Condexa Pro 7x 70 P	476	SP 35 - DN50 81 (81A) N	DN50	SP 35 - DN50 121 (121A) N	DN50
	Condexa Pro 7x 90	630	SP 40 - DN65 75 (75A) N	DN65	SP 40 - DN65 111 (111A) N	DN65
	Condexa Pro 7x 100	679	SP 40 - DN65 75 (75A) N	DN65	SP 40 - DN65 121 (121A) N	DN65
	Condexa Pro 7x 115	784	SP 40 - DN65 93 (93A) N	DN65	SP 40 - DN65 145 (145A) N	DN65
	Condexa Pro 7x 135	917	SP 60 - DN100 51 (51A) N	DN100	SP 60 - DN100 73 (73A) N	DN100

Description

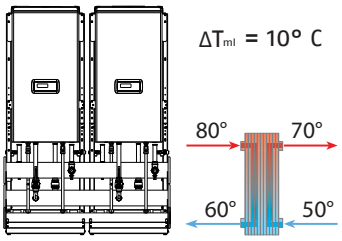

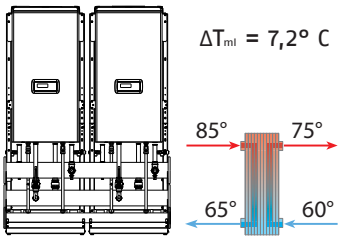

No. of cascade generators	Model	Useful heat output [kW]	Heat exchanger	DN	Heat exchanger	DN
8	Condexa Pro 8x 35 P	279	SP 35 – DN50 49 (49A) N	DN50	SP 35 – DN50 75 (75A) N	DN50
	Condexa Pro 8x 50 P	400	SP 35 – DN50 57 (57A) N	DN50	SP 35 – DN50 93 (93A) N	DN50
	Condexa Pro 8x 57 P	456	SP 35 – DN50 75 (75A) N	DN50	SP 35 – DN50 121 (121A) N	DN50
	Condexa Pro 8x 70 P	544	SP 40 – DN65 67 (67A) N	DN65	SP 40 – DN65 99 (99A) N	DN65
	Condexa Pro 8x 90	720	SP 40 – DN65 93 (93A) N	DN65	SP 40 – DN65 145 (145A) N	DN65
	Condexa Pro 8x 100	776	SP 40 – DN65 93 (93A) N	DN65	SP 40 – DN65 145 (145A) N	DN65
	Condexa Pro 8x 115	896	SP 60 – DN100 59 (59A) N	DN100	SP 60 – DN100 73 (73A) N	DN100
	Condexa Pro 8x 135	1048	SP 60 – DN100 59 (59A) N	DN100	SP 60 – DN100 85 (85A) N	DN100
9	Condexa Pro 9x 35 P	314	SP 35 – DN50 57 (57A) N	DN50	SP 35 – DN50 93 (93A) N	DN50
	Condexa Pro 9x 50 P	450	SP 35 – DN50 65 (65A) N	DN50	SP 35 – DN50 105 (105A) N	DN50
	Condexa Pro 9x 57 P	513	SP 40 – DN65 59 (59A) N	DN65	SP 40 – DN65 99 (99A) N	DN65
	Condexa Pro 9x 70 P	612	SP 40 – DN65 75 (75A) N	DN65	SP 40 – DN65 111 (111A) N	DN65
	Condexa Pro 9x 90	810	SP 60 – DN100 51 (51A) N	DN100	SP 60 – DN100 65 (65A) N	DN100
	Condexa Pro 9x 100	873	SP 60 – DN100 51 (51A) N	DN100	SP 60 – DN100 73 (73A) N	DN100
	Condexa Pro 9x 115	1008	SP 60 – DN100 65 (65A) N	DN100	SP 60 – DN100 85 (85A) N	DN100
10	Condexa Pro 10x 35 P	349	SP 35 – DN50 57 (57A) N	DN50	SP 35 – DN50 93 (93A) N	DN50
	Condexa Pro 10x 50 P	500	SP 35 – DN50 75 (75A) N	DN50	SP 35 – DN50 121 (121A) N	DN50
	Condexa Pro 10x 57 P	570	SP 40 – DN65 67 (67A) N	DN65	SP 40 – DN65 111 (111A) N	DN65
	Condexa Pro 10x 70 P	680	SP 40 – DN65 75 (75A) N	DN65	SP 40 – DN65 121 (121A) N	DN65
	Condexa Pro 10x 90	900	SP 60 – DN100 51 (51A) N	DN100	SP 60 – DN100 73 (73A) N	DN100
	Condexa Pro 10x 100	970	SP 60 – DN100 59 (59A) N	DN100	SP 60 – DN100 77 (77A) N	DN100
	Condexa Pro 10x 115	1120	SP 60 – DN100 73 (73A) N	DN100	SP 60 – DN100 97 (97A) N	DN100

HYDRAULIC CIRCUIT

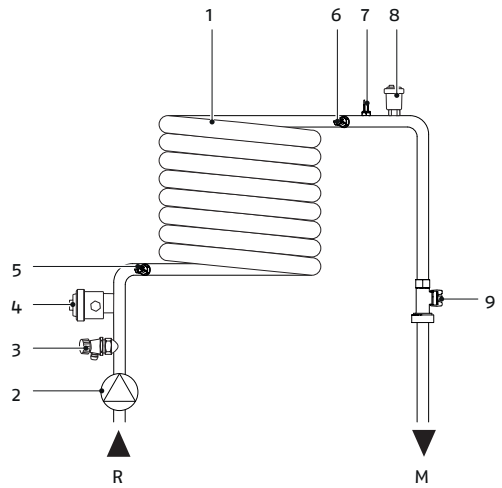

1. Heat exchanger
2. Circulator (only for Condexa 35 P - 50 P - 57 P - 70 P)
3. Drain tap
4. Minimum pressure switch
5. NTC return probe
6. NTC delivery probe
7. Safety thermostat probe
8. Automatic bleed valve
9. Flow meter

F Central heating flow
R R System return

CIRCULATORS

Condexa Pro 35 P - 50 P - 57 P - 70 P

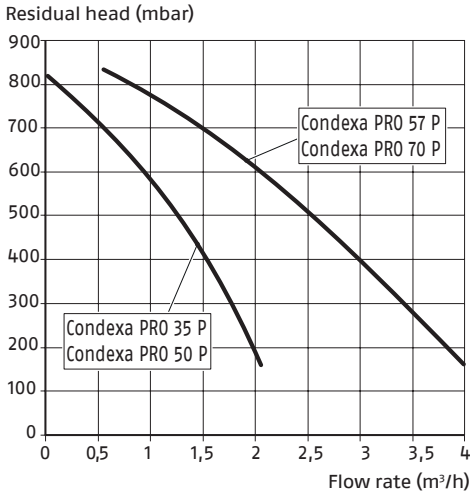

Condexa Pro 90 - 100 - 115 - 135 with circulator
Pressure drops on the water side of the generators

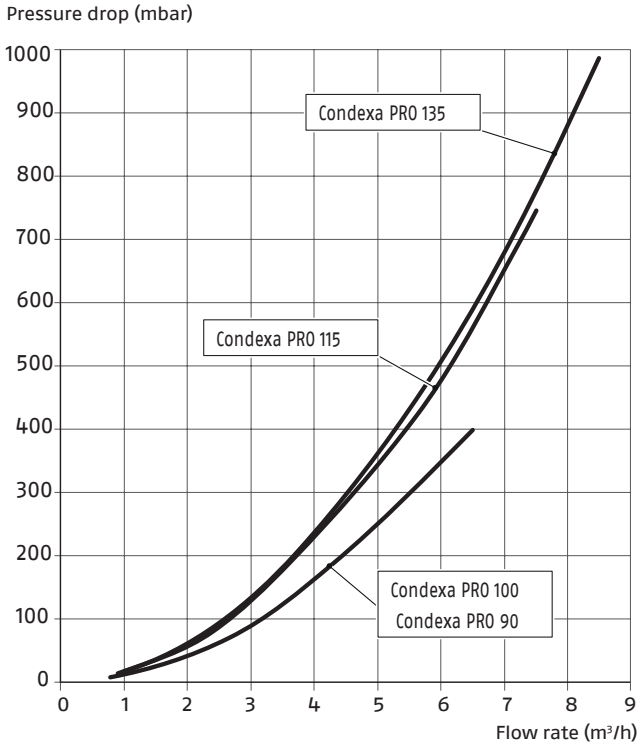

Condexa PRO 90, Condexa PRO 100, Condexa PRO 115 and Condexa PRO 135 have no circulator which must be installed internally or externally to the appliance. For its sizing consider the water side pressure losses of the thermal module, shown in the graph above.

HYDRAULIC CONNECTIONS AND FUMES DISCHARGE

The dimensions and position of thermal module's hydraulic connections are shown in the table below.

Front view

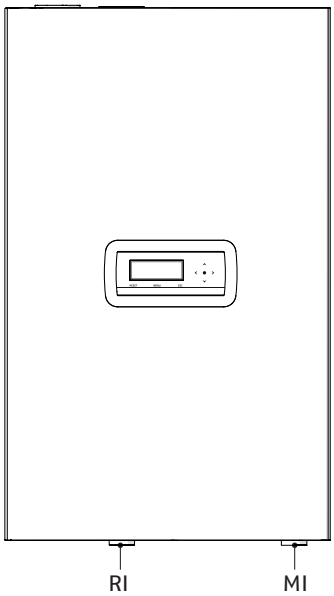

Bottom view

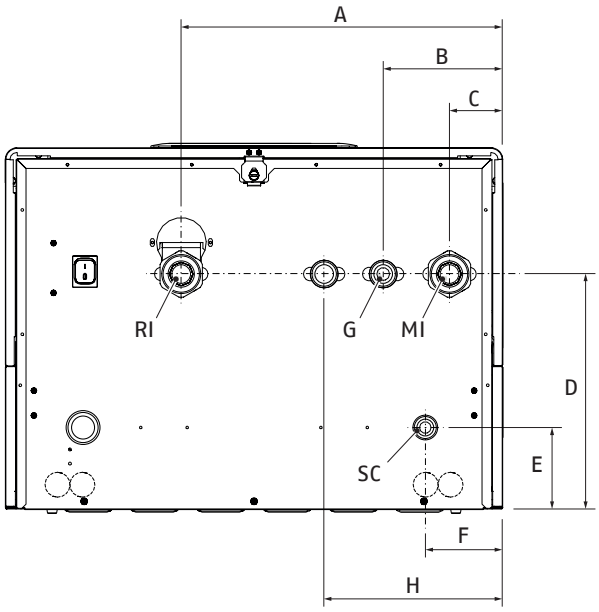

DESCRIPTION			Condexa PRO							
			35 P	50 P	57 P	70 P	90	100	115	135
A		mm	387	387	387	387	387	387	387	387
B		mm	143,5	143,5	143,5	143,5	143,5	143,5	143,5	143,5
C		mm	63,5	63,5	63,5	63,5	63,5	63,5	63,5	63,5
D		mm	283,5	283,5	283,5	283,5	283,5	283,5	283,5	283,5
E		mm	98,5	98,5	98,5	98,5	98,5	98,5	98,5	98,5
F		mm	92,5	92,5	92,5	92,5	92,5	92,5	92,5	92,5
H	(optional 3-way valve connection)	mm	202,5	202,5	-	-	-	-	-	-
F	(System flow)	Ø	G 1 "1/2 M	G 1 "1/2 M	G 1 "1/2 M	G 1 "1/2 M	G 1 "1/2 M	G 1 "1/2 M	G 1 "1/2 M	G 1 "1/2 M
R	(System return)	Ø	G 1 "1/2 M	G 1 "1/2 M	G 1 "1/2 M	G 1 "1/2 M	G 1 "1/2 M	G 1 "1/2 M	G 1 "1/2 M	G 1 "1/2 M
SC	(condensate drain)	Ø mm	25	25	25	25	25	25	25	25
G	(gas inlet)	Ø	G 1" M	G 1" M	G 1" M	G 1" M	G 1" M	G 1" M	G 1" M	G 1" M

WATER IN THE PLANT

Before connecting the thermal module, it is necessary to clean the system. This step is absolutely required when the appliance replaces another one on pre-existing systems.

In order to carry out this cleaning activity, if the old generator is still installed on the system, it is advisable to:
- Add a de-scaling additive.
- Operate the system with the generator on for around 7 days.
- Discharge dirty system water and flush the system one or more times with clean water.

If the system is very dirty, repeat the last procedure one more time.
In case of new installation or if the old generator is not present or available, use a pump to circulate the additive water in the system for about 10 days and carry out the final washing as described in the previous paragraph.
Once the cleaning has been completed, it is recommended to add a suitable protective fluid to the system's water before installing the thermal module.
Do not use incompatible liquid detergents, including acids (eg chloridric acid and similar) in any concentration.
Do not subject the exchanger to cyclical pressure variations because the fatigue stress is very dangerous for the integrity of the system components.

Sludge, limestone and contaminants present in the water can lead to irreversible damage to the heat generator, even in short times and regardless of the quality level of the materials used.
The quality of the water used in the heating system must comply with the following parameters:

Parameters	Value	Unit
General characteristic	Colorless, without sediment	
PH value	Min 6.5; Max 8	PH
Dissolved oxygen	<0.05	mg / l
Total iron (Fe)	<0.3	mg / l
Total Copper (Cu)	<0.1	mg / l
Na2S03	<10	mg / l
N2H4	<3	mg / l
P04	<15	mg / l
CaC03	Min 50; Max 150	ppm
Trisodium phosphate	None	ppm
Chlorine	<100	ppm
Electrical conducibility	<200	microsiemens / cm
Pressure	Min 0.6; Max 6	bar
Glycol	Max 40% (only propylene glycol)	%

All the data in the table refer to the water contained in the system after 8 weeks' operation.

Do not use excessively softened water. Excessive water softening (total hardness <5 ° f) could generate corrosive phenomena in contact with metal elements (pipes or thermal module components).
Immediately repair any leaks or drips that could result in air entering the system.
Excessive pressure fluctuations can cause stress and fatigue to the heat exchanger.
Water used to fill a system for the first time and water used to top it up must always be filtered (using synthetic or metal mesh filters with a filtration rating of no less than 50 microns) to prevent sludge from forming and triggering deposit corrosion.
If oxygen enters a circuit continuously or even intermittently (e.g. in under-floor heating systems whose pipes are not protected by impermeable synthetic sheaths, in circuits with open expansion vessels, or in circuits that require frequent top-ups) always separate the boiler's water circuit from the central heating circuit.
It is prohibited to top up the heating system constantly or frequently, since this can damage the thermal module's heat exchanger. The use of automatic topping up systems should be avoided for this reason.

To sum up, in order to eliminate contact between air and water (and to prevent the latter from becoming oxidized), it is necessary:
- that the expansion system be a closed vessel, correctly sized and with the correct pre-loading pressure (to be regularly checked);
- that the system be always at a pressure higher than the atmospheric one at any point (including the pump suction side) and under any operating conditions (all seals and hydraulic couplings in a system are designed to withstand pressure towards the outside, but not underpressure);
- the installation be not made with gas-permeable materials (e.g. plastic pipes without oxygen barrier for underfloor heating systems).
-

Damages suffered by the thermal module, caused by encrustations and corrosion, are not covered by warranty.

ELECTRICAL WIRING

The boilers are designed to be all Managing or Depending depending on the setting on the control panel

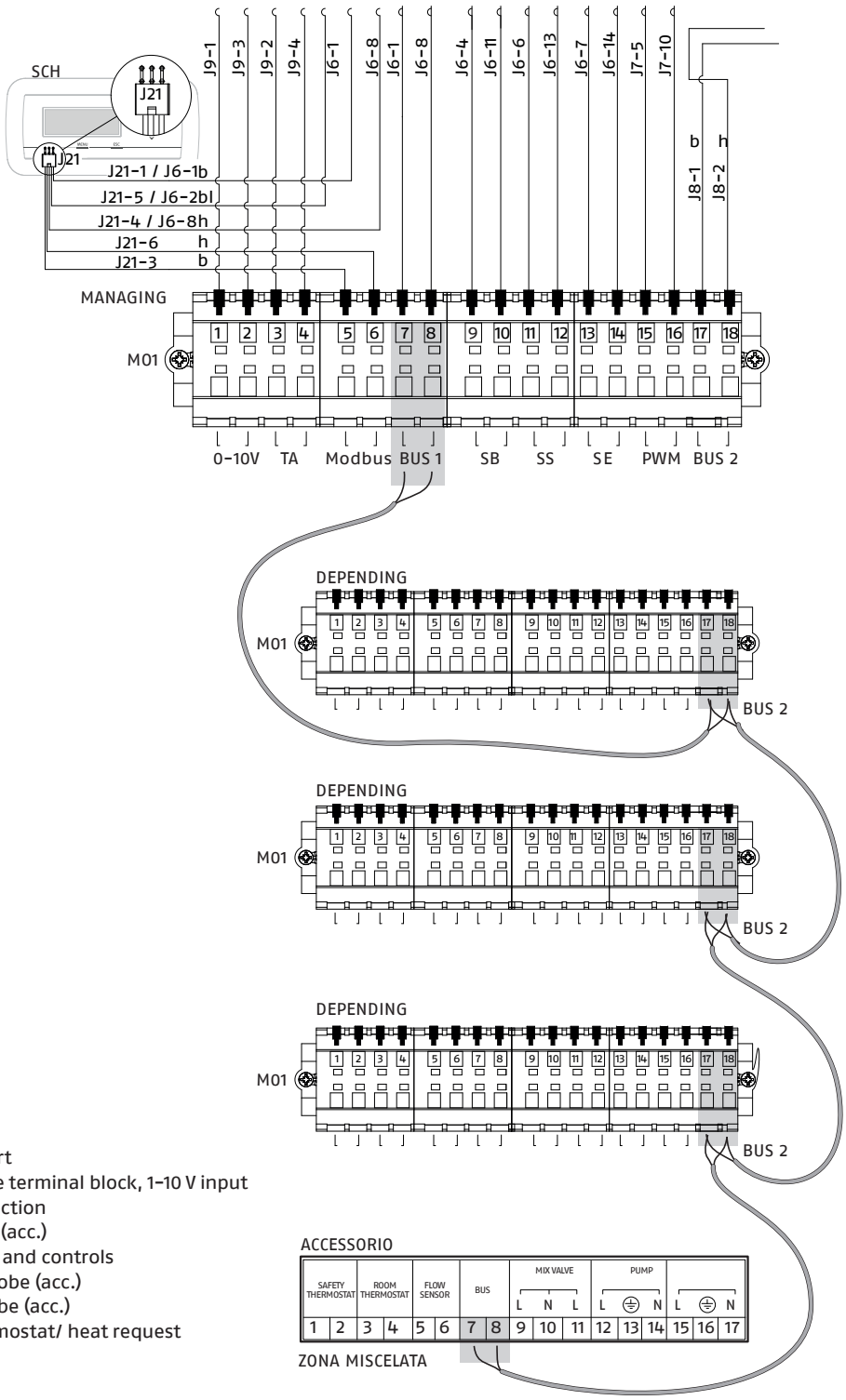

Key

Modbus	Modbus port
M01	Low voltage terminal block, 1-10 V input
PWM	PWM connection
SB	Tank probe (acc.)
SCH	display PCB and controls
SE	External probe (acc.)
SS	System probe (acc.)
TA	Room thermostat/ heat request
0-10V	0-10V Input

INSTALLING THE EXTERNAL TEMPERATURE PROBE (ACCESSORY)

The correct positioning of the external probe is fundamental for the proper functioning of the climate control.
The probe must be installed outside the building to be heated, at about 2/3 of the height of the north or north-west facade and away from chimneys, doors, windows and sunny areas.
The probe must be placed in a smooth wall stretch; in the case of exposed bricks or irregular walls, a smooth contact area should be provided.
The maximum length of the connection between the external probe and the control panel is 50 m. In case of connections with a cable longer than 50 m, check that the value read by the card corresponds to a real measurement and use parameter 39 to make any correction.
The connection cable between the probe and the control panel must not have joints; if necessary, it must be tinned and adequately protected.
Any ducting of the connection cable must be separated from live cables (230V AC).
If the external probe is not connected, parameters 14 and 22 should be set to "0".

Correspondence table valid for all probes

T (°C)	R (° Ω)
0	27396
5	22140
10	17999
15	14716
20	12099
25	10000
30	8308
35	6936
40	5819
45	4904
50	4151
55	3529
60	3012
65	2582
70	2221
80	1663
85	1446
90	1262
95	1105
100	970

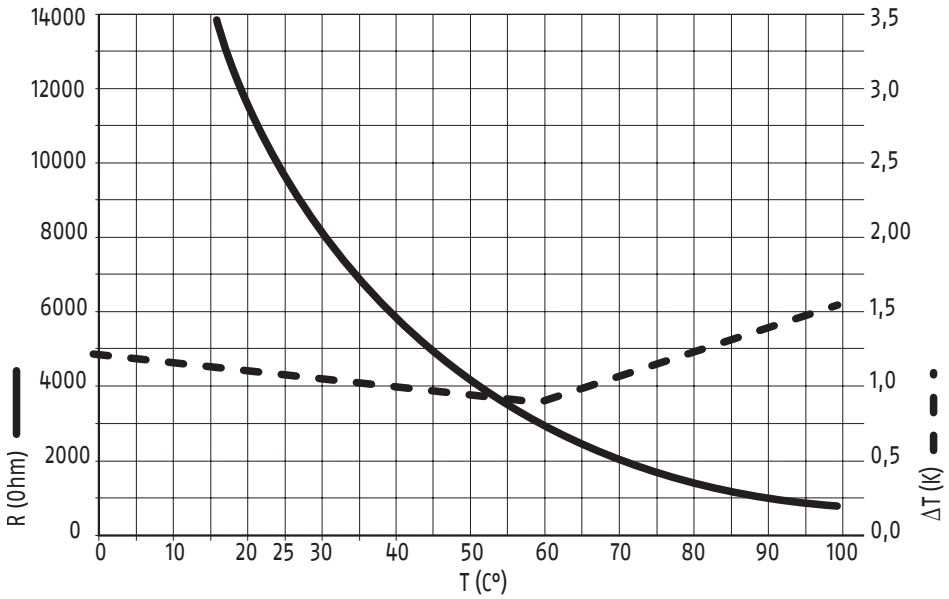

CONTROL PANEL

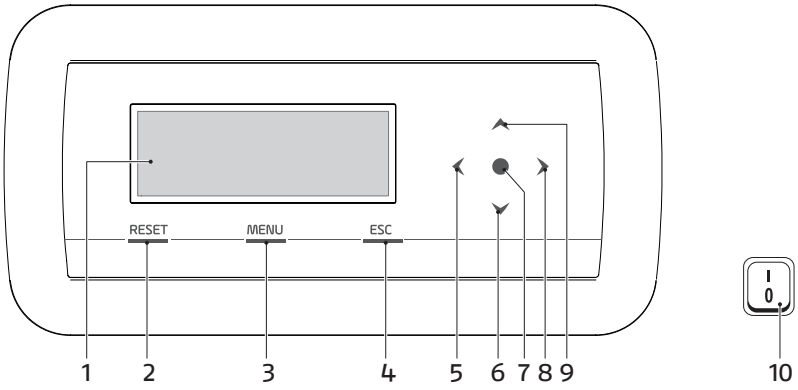

1. 255x80 backlit display (106,4x39,0mm)
2. RESET button: allows operation to be restored after a fault stop
3. MENU button: allows access to the main menu
4. ESC button: in the menu navigation it allows to exit from a menu item and return to the previous one
5. Navigation button
6. Navigation button ▼
7. Navigation button •
8. Navigation button ►
9. Navigation button ▲
10. Main switch (located on the bottom of the appliance)

DISCHARGE OF COMBUSTION PRODUCTS

The appliance is supplied as standard in type B configuration (B23-B53P-B53P), therefore prepared to draw air directly into the installation room, and can become type C with the use of specific accessories. In this configuration the appliance will draw in air directly from the outside with the possibility of having coaxial or split pipes.
It is essential that only specific pipes for condensing boilers are used for extracting the combustion air and that the connection is made correctly as indicated by the instructions supplied with the smoke accessories.
Do not connect the smoke evacuation ducts of this appliance to those of other appliances unless expressly approved by the manufacturer. Failure to comply with this warning may result in accumulation of carbon monoxide which can cause serious personal injury or death.

Ensure that the combustion air (intake air) is not contaminated by:
- waxes/chlorinated detergent
- chemical products based on swimming pool chlorine
- calcium chloride
- sodium chloride used for water softening
- refrigerant leaks
- paint or varnish removal products
- hydrochloric acid / muriatic acid
- cements and glues
- antistatic softeners used in dryers
- chlorine used for domestic or industrial purposes as a detergent
- whitener or solvent
- adhesives used to glue construction products and others
- similar products.

To prevent contamination, do not install suction line air intakes and gas flue extraction pipes near:
- dry-cleaners/laundry rooms and factories
- pools
- metallurgy processing plants
- beauty parlours
- fridge repair shops
- photo processing facilities
- body-shops
- plastics manufacturing plants
- furniture workshops and manufacturing plants.

The exhaust duct and the fumes connection must be made in compliance with the standards, current legislation and local regulations.
The use of rigid ducts that are resistant to temperature, condensation, mechanical stress and tightness is mandatory.
Non-insulated exhaust ducts are potential sources of danger.

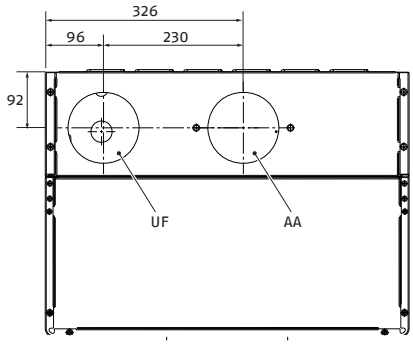

DESCRIPTION	Condexa PRO 35 P	Condexa PRO 50 P	Condexa PRO 57 P	Condexa PRO 70 P	Condexa PRO 90	
UF (fumes outlet)	DN80	DN80	DN80	DN80	DN110	Ø
AA (air intake)	DN80	DN80	DN80	DN80	DN110	Ø

DESCRIPTION	Condexa PRO 100	Condexa PRO 115	Condexa PRO 135	
UF (fumes outlet)	DN110	DN110	DN110	Ø
AA (air intake)	DN110	DN110	DN110	Ø

In case of type B installation, the combustion air is taken from the environment and passes through the openings (jalousies) made on the back panel of the appliance which must be located in an appropriate technical room and provided with ventilation.
Check that condensation does not build up along the duct. For this purpose, provide a sloping duct of at least 3 ° towards the appliance in the presence of a horizontal section. If the horizontal or vertical section is longer than 4 meters, it is necessary to provide a siphoned drainage of the condensate at the foot of the pipe. The useful height of the siphon must be at least the value "H" shown in the table. The drain of the siphon must therefore be connected to the sewerage system.
For changes of direction, use a T-fitting with an inspection cap which allows easy periodic cleaning of the pipes.
Always make sure that after cleaning the inspection plugs are hermetically closed with the relative seal intact.

Description	Head	
	Max	Min
Condexa PRO 35 P	300	45
Condexa PRO 50 P	480	45
Condexa PRO 57 P	510	35
Condexa PRO 70 P	630	35
Condexa PRO 90	560	32
Condexa PRO 100	610	32
Condexa PRO 115	500	30
Condexa PRO 135	353	28

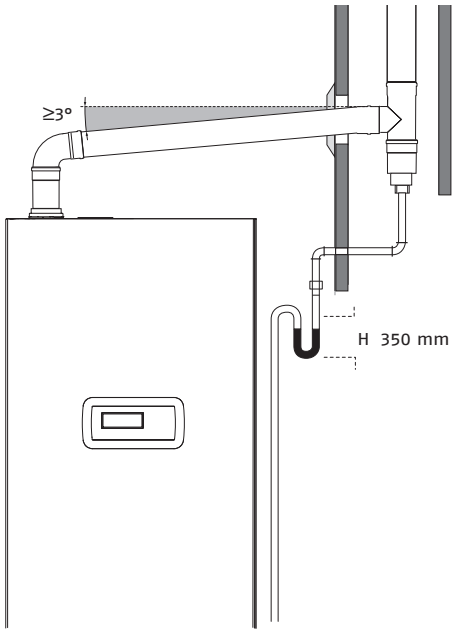

FRONT CASCADE CONFIGURATION

Assembly of the DN 160 – DN200 – DN250 FLUE SYSTEM

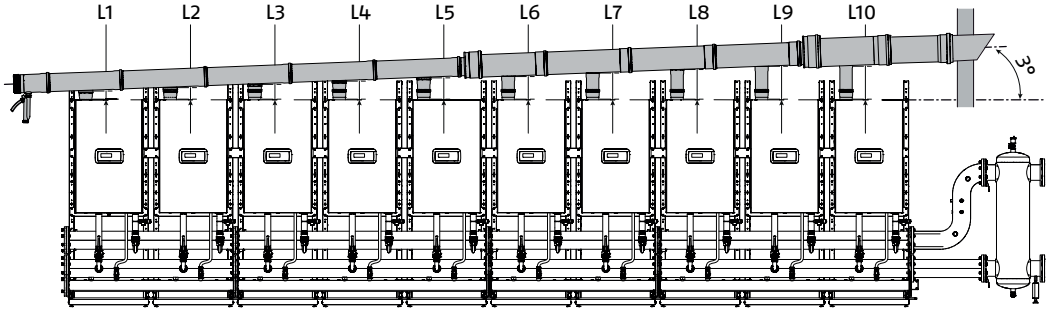

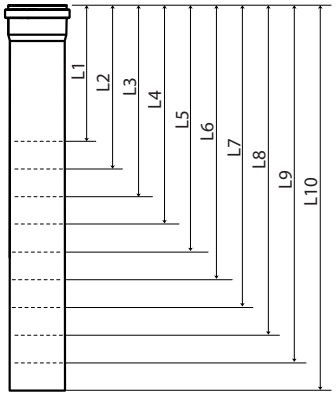

mm	L1	L2	L3	L4	L5	L6	L7	L8	L9	L10
	142	172	202	232	262	292	322	352	382	412

A DN80/DN110 adapter is required ONLY FOR Condexa PRO 57 P and Condexa PRO 70 P MODELS with flue gas outlet DN80. This adapter is to be installed on the flue outlet and subsequently the cutting lengths must be reduced by 60mm.

ONLY FOR Condexa PRO 135 MODELS, no more than 8 modules.

ONLY FOR MODELS Condexa PRO 35 P and Condexa PRO 50 P having a DN80 flue gas outlet, a DN80 / DN110 adapter is required to be installed on the flue gas outlet after mounting the DN80 clapper; this means that in this case the cutting lengths must be reduced by 60mm.

CASCADE B2B CONFIGURATION (BACK TO BACK)

Assembly of the DN 160 – DN200 – DN250 FLUE SYSTEM

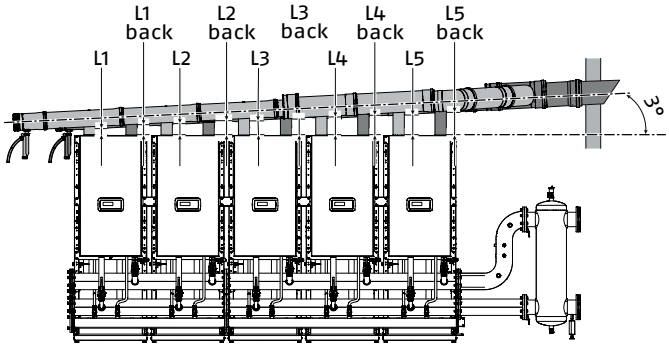

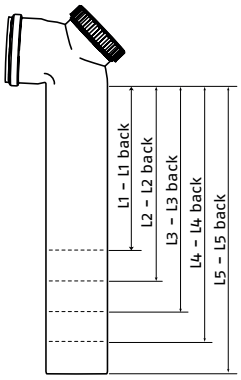

mm	L1 L1 back	L2 L2 back	L3 L3 back	L4 L4 back	L5 L5 back
	172	197	236	275	315

A DN80/DN110 adapter is required ONLY FOR Condexa PRO 57 P and Condexa PRO 70 P MODELS with flue gas outlet DN80. This adapter is to be installed on the flue outlet and subsequently the cutting lengths must be reduced by 60mm.

ONLY FOR Condexa PRO 135 MODELS, no more than 8 modules.

ONLY FOR MODELS Condexa PRO 35 P and Condexa PRO 50 P having a DN80 flue gas outlet, a DN80 / DN110 adapter is required to be installed on the flue gas outlet after mounting the DN80 clapper; this means that in this case the cutting lengths must be reduced by 60mm.

FLUE DISCHARGE WITH SINGLE DUCT

Model	Number of modules	DN Flue gas manifold	Maximum lenght espressed in meters
Condexa PRO 50 P	2	160	30
	3	160	30
	4	160	30
	5	160	30
	6	160	30
	7	160	30
	8	160	30
	9	200	30
	10	200	30
Condexa PRO 70 P	2	160	30
	3	160	30
	4	160	30
	5	160	30
	6	200	30
	7	200	30
	8	200	30
	9	200	30
	10	250	30
Condexa PRO 100	2	160	30
	3	160	30
	4	160	30
	5	200	30
	6	200	30
	7	200	30
	8	250	30
	9	250	30
	10	250	30
Condexa PRO 115	2	160	30
	3	160	30
	4	200	30
	5	200	30
	6	250	30
	7	250	30
	8	250	30
	9	250	30
	10	250	30
Condexa PRO 135	2	160	30
	3	160	30
	4	200	30
	5	200	30
	6	250	30
	7	250	30
	8	250	30

ACCESSORIES

1. FRONT OR BACK-TO-BACK LAYOUT SELECTION
2. ACCESSORIES TO COMPLETE THE SYSTEM
3. ACCESSORIES
   - 3.1 Frame
   - 3.2 Injection pumps or shut-off valves for single boiler
   - 3.3 Connection ramps
   - 3.4 Water manifolds (delivery/return)-gas-condensate
   - 3.5 Manifolds and safety accessories
   - 3.6 Hydraulic separator or plate heat exchanger
   - 3.7 Secondary circuit management
   - 3.8 Sealed transformation kit
   - 3.9 Flue system
   - 3.10 Treatment system for neutralising condensate

		CONDEXA PRO							
Image	Description	35 P	50 P	57 P	70 P	90	100	115	135
ACCESSORIES TO COMPLETE THE SYSTEM									
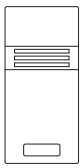	**External probe**: it contains a probe to be installed in external environment, model: NTC 10 kOhm@25°C, used for the climatic mode of operation.	●	●	●	●	●	●	●	●
	Primary probe: it contains a NTC bulb probe 10 kOhm @ 25 ° C. N.1 probe for each cascade system, to be wired in the Master boiler.	●	●	●	●	●	●	●	●
	Condensate discharge kit for in cascade boilers: it contains a flexible pipe for the condensate discharge of each single module (boiler/manifold connection) and a cable clamp. To be ordered for each boiler of the cascade system (q.ty = no. boilers)	●	●	●	●	●	●	●	●

Image	Description	CONDEXA PRO							
		35 P	50 P	57 P	70 P	90	100	115	135
Frame - FRONT configuration									
Quantity of frames to be ordered in function of the number of boilers installed									
	Frame kit for front cascades: it contains all the panels (and screws) needed to install the boiler support frame (this kit can be used for all Condexa PRO boiler range). The quantities to consider are indicated in the tables below	●	●	●	●	●	●	●	●
Frame - BACK-TO-BACK configuration									
Quantity of frames and conversion kits to be ordered according to the number of boilers installed									
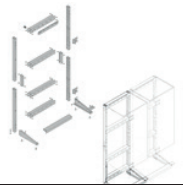	**Frame kit for front cascades**: it contains all the panels (and screws) needed to install the boiler support frame (this kit can be used for all Condexa PRO boiler range) .	●	●	●	●	●	●	●	●
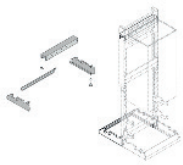	**Frame conversion kit for B2B cascades**: contains all the sheet metal (and screws) needed to build the support base of the frame for back-to-back installations (B2B). The quantities to be considered are shown in the tables below	●	●	●	●	●	●	●	●
Injection pumps or shut-off valves for single boiler For models 90-135 (not necessary for models 35-70 - pump already present on board)									
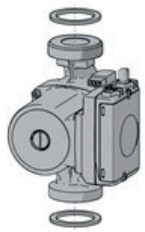	**Low consumption injection pump kit up to 90/100/115 kW** : to be ordered for each boiler of the cascade system (q.ty = n°boilers); pump to be installed inside the boiler, equipped with equipped with a connection cable to the boiler). Performance: High head for Condexa PRO 90-100 (370 mbar with DT=20°C). Standard head for Condexa PRO 115 (70 mbar with DT=20°C).					●	●	●	

IN LINE (FRONT)	
No. boilers	Frame qty
2	2
3	3
4	4
5	5
6	6
7	7
8	8
9	9
10	10

IN LINE (FRONT)	
No. boilers	Frame qty
2	2
3	3
4	4
5	5
6	6
7	7
8	8
9	9
10	10

BACK-TO-BACK		
No. boilers	Qty frame	Conversion kit q.ty
2	1	1
3	2	2
4	2	2
5	3	3
6	3	3
7	4	4
8	4	4
9	5	5
10	5	5

		CONDEXA PRO							
Image	Description	35 P	50 P	57 P	70 P	90	100	115	135
	Low consumption injection pump kit up to 115/135 kW: to be ordered for each boiler of the cascade system (q.ty = n°boilers); pump to be installed inside the boiler, equipped with equipped with a connection cable to the boiler). Performance: High head for Condexa PRO 90 –100 (620 mbar with DT=20°C) High head for Condexa PRO 115 (270 mbar with DT=20°C) Standard head for Condexa PRO 135 (10 mbar with DT=20°C).							●	●
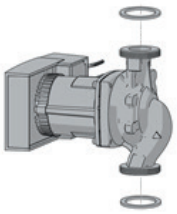	**Low consumption injection pump kit up to 135 kW** : to be ordered for each boiler of the cascade system (q.ty = n°boilers); pump to be installed outside (using dedicated pipes) the boiler, equipped with equipped with a connection cable to the boiler). Performance: High head for Condexa PRO 90 –100 (1050 mbar with DT=20°C) High head for Condexa PRO 115 (800 mbar with DT=20°C) High head for Condexa PRO 135 (570 mbar with DT=20°C)								●
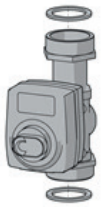	**2–way valve kit**: to be ordered for each boiler of the cascade system (qty=no.boilers); valve to be installed inside the boiler, complete with connection cable to the boiler. It can be installed on cascade system modules. It allows the hydraulic interception of the modules turned off. A general pump is required on the ring of the primary circuit					●	●	●	●
Connection pipes – FRONT configuration									
	Pipes without shut–off 35–135: kit suitable for Condexa PRO 35÷135 boilers in a cascade system with "front" configuration. The kit includes: • delivery and return pipes for connecting the thermal module to the hydraulic manifolds without any interception • gas supply pipe from the manifolds to the generator, with interception. Each kit connects 1 thermal module to the cascade system.	●	●	●	●	●	●	●	●
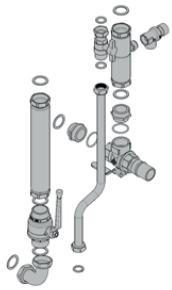	**Pipes with interception 35–135**: kit suitable for Condexa PRO 35÷135 boilers in a cascade system with "front" configuration. The kit includes: • delivery and return pipes for connecting the thermal module to the hydraulic manifolds, with hydraulic interception of the module • gas supply pipe from the manifolds to the generator, with interception. The hydraulic interception ensure service continuity during the ordinary and extraor–dinary maintenance operations on the single module. Each kit connects 1 thermal module to the cascade system.	●	●	●	●	●	●	●	●

		CONDEXA PRO							
Image	**Description**	**35 P**	**50 P**	**57 P**	**70 P**	**90**	**100**	**115**	**135**
	Pipes without interception 135 (external pump): kit suitable for Condexa PRO 135 boilers with high head pump, in a "front" cascade system. The kit includes: • delivery and return pipes for connecting the thermal module to the hydraulic manifolds without any interception • gas supply pipe from the manifolds to the generator, with interception. Each kit connects 1 thermal module to the cascade system.								●
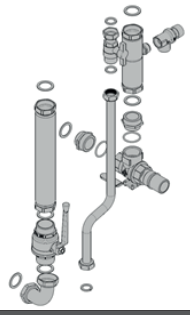	**Pipes with safety interception (external pump)**: kit suitable for Condexa PRO 135 boilers with high head pump, in a "front" cascade system. The kit includes: • delivery and return pipes for connecting thermal module to the hydraulic manifolds, with hydraulic interception of the module • gas supply pipe from the manifolds to the generator, with interception. Hydraulic interception ensure service continuity during the ordinary and extraordinary maintenance operations on the single module. Each kit connects 1 thermal modules to the cascade system.								●
Connection pipes - BACK-TO-BACK configutration									
	Pipes without shut-off 35-135: kit suitable for Condexa PRO 35÷135 boilers in a cascade system with "front" configuration. The kit includes: • delivery and return pipes for connecting the thermal module to the hydraulic manifolds without any interception • gas supply pipe from the manifolds to the generator, with interception. Each kit connects 1 thermal module to the cascade system.	●	●	●	●	●	●	●	●
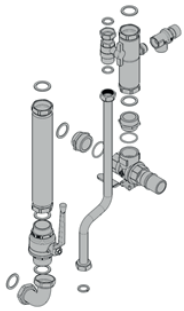	**Pipes with safety interception 35-135**:Kit suitable for Condexa PRO 35÷135 boilers in a "front" cascade system The kit includes: • delivery and return pipes for connecting the thermal module to the hydraulic manifolds, with hydraulic interception of the module • gas supply pipe from the manifolds to the generator, with interception. The hydraulic interception ensure service continuity during the ordinary and extraordinary maintenance operations on the single module. Each kit connects 1 thermal module to the cascade system.	●	●	●	●	●	●	●	●
	Pipes without interception 135 (external pump): kit suitable for Condexa PRO 135 boilers with high head pump, in a "front" cascade system. The kit includes: • delivery and return pipes for connecting the thermal module to the hydraulic manifolds without any interception • gas supply pipe from the manifolds to the generator, with interception. Each kit connects 1 thermal module to the cascade system.								●

		CONDEXA PRO							
Image	**Description**	**35 P**	**50 P**	**57 P**	**70 P**	**90**	**100**	**115**	**135**
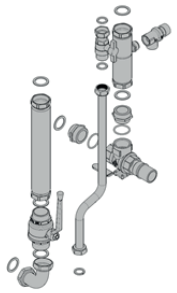	**Pipes with safety interception (external pump)**: kit suitable for Condexa PRO 135 boilers with high head pump, in a "front" cascade system. The kit includes: • delivery and return pipes for connecting thermal module to the hydraulic manifolds, with hydraulic interception of the module • gas supply pipe from the manifolds to the generator, with interception. Hydraulic interception ensure service continuity during the ordinary and extraordinary maintenance operations on the single module. Each kit connects 1 thermal modules to the cascade system.								●
	Pipes without safety interception 35–135: kit suitable for Condexa PRO 35÷135 boilers in a "front" cascade system or in the opposite side of the manifolds in a "back-to-back" system. The kit includes: • delivery and return pipes for connecting the thermal module to the hydraulic manifolds without any interception • gas supply pipe from the manifolds to the generator, with interception. Each kit connects 1 thermal module to the cascade system	●	●	●	●	●	●	●	●
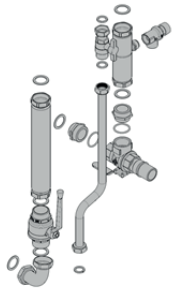	**Pipes with safety interception 35–135 (B2B)**: kit suitable for Condexa PRO 35÷135 boilers in a "front" cascade system or in the opposite side of the manifolds in a "back-to-back" system. The kit includes: • Delivery and return pipe for connecting the thermal module to the hydraulic manifolds, with hydraulic interception of the connected module • gas supply pipe from the manifolds to the generator, with interception. the hydraulic interception ensure the service continuity during ordinary and extraordinary operations on the single module. Each kit connects 1 thermal module to the cascade system.	●	●	●	●	●	●	●	●
	Pipes without safety interception 135: kit suitable for Condexa PRO 135 boilers with high head pump, in a "front" cascade system or in the opposite side of the manifolds in a "back-to-back" system. The kit includes: • delivery and return pipes for connecting the thermal module to the hydraulic manifolds without any interception • gas supply pipe from the manifolds to the generator, with interception. Each kit connects 1 thermal module to the cascade system								●

		CONDEXA PRO							
Image	**Description**	**35 P**	**50 P**	**57 P**	**70 P**	**90**	**100**	**115**	**135**
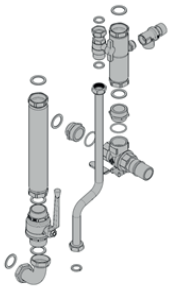	**Pipes with safety interception 135(external pump) (B2B)**: kit suitable for Condexa PRO 135 boilers in a "front" cascade system or in the opposite side of the manifolds in a "back-to-back" system. The kit includes: • delivery and return pipes for connecting of the thermal module to the hydraulic manifolds, with hydraulic interception • gas supply pipe from the manifolds to the generator, with interception. the hydraulic interception ensure the service continuity during ordinary and extraordinary operations on the single module. Each kit connects 1 thermal module to the cascade system.								●

hydraulic manifolds (delivery/return) - gas - condensate

Table of combination of boiler cascade collectors

Model	CONDEXA PRO 35 P	CONDEXA PRO 50 P	CONDEXA PRO 57 P	CONDEXA PRO 70 P	CONDEXA PRO 90	CONDEXA PRO 100	CONDEXA PRO 115	CONDEXA PRO 135
Boiler heat output kW	**35**	**45**	**57**	**68**	**90**	**97**	**112**	**131**
No. boilers	TOTAL CASCADE OUTPUT/DIAMETER H_2O COLLECTORS							
2	70/3 "	90/3 "	114/3 "	136/3 "	180/3 "	194/3 "	224/3 "	262/3 "
3	105/3 "	135/3 "	171/3 "	204/3 "	270/3 "	291/3 "	336/3 "	393/3 "
4	140/3 "	180/3 "	228/3 "	272/3 "	360/3 "	388/3 "	448/3 "	524/5 "
5	175/3 "	225/3 "	285/3 "	340/3 "	450/3 "	485/3 "	560/5 "	655/5 "
6	209/3 "	270/3 "	342/3 "	408/3 "	540/5 "	582/5 "	672/5 "	786/5 "
7	244/3 "	315/3 "	399/3 "	476/3 "	630/5 "	679/5 "	784/5 "	917/5 "
8	279/3 "	360/3 "	456/3 "	544/5 "	720/5 "	776/5 "	896/5 "	1048/5 "
9	314/3 "	405/3 "	513/5 "	612/5 "	810/5 "	873/5 "	1008/5 "	-
10	349/3 "	450/3 "	570/5 "	680/5 "	970/5 "	970/5 "	1120/5 "	-

NB: For the related pairing, refer to the tables in the Catalog.

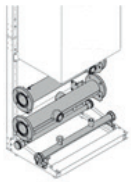	**3"manifolds kit for connecting 1 boiler in a cascade system: hydraulic manifolds with a length of 1 module, for cascaded systems of Condexa PRO models 35÷135. The kit is developed on a length in which it is possible to connect 2 modules (1+1) in a back-to-back configuration; it is possible to combine several manifold kits of this type for installations with a total power of 270 kW. Suitable for "back-to-back" configurations..** Kit consisting of: • No.2 Ø 3"hydraulic manifolds (delivery and return) insulated and with DN80 flanged connections; • No.1 Ø 2" gas manifold with 2" G.M. threaded connections • Condensate drain manifold • Complete set of tube-clamp collars, nuts and gaskets The closing caps are not included in the kit and must be provided separately with a special code.	●	●	●	●	●	●	●	●

		CONDEXA PRO							
Image	**Description**	**35 P**	**50 P**	**57 P**	**70 P**	**90**	**100**	**115**	**135**
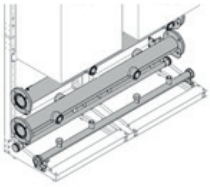	**3 "manifolds kit for connecting 2 boilers in a cascade system**: hydraulic manifolds with a length of 2 modules, for cascaded systems of Condexa PRO models 35 ÷ 135. The kit is developed on a length in which it is possible to connect up to 2 modules in a "front" or up to 4 modules (2+2) in a back-to-back configuration; it is possible to combine several manifold kits of this type for installations with a total power of 485 kW. Suitable for "front" or "back-to-back" configurations. Kit consisting of: • No.2 Ø 3"hydraulic manifolds (delivery and return) insulated and with DN80 flanged connections; • No.1 Ø 2" gas manifold with 2" G.M. threaded connections • Condensate drain manifold • Complete set of tube-clamp collars, nuts and gaskets The closing caps are not included in the kit and must be provided separately with a special code.	●	●	●	●	●	●	●	●
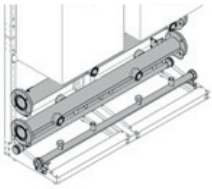	**3 "manifolds kit for connecting 3 boilers in a cascade system**: hydraulic manifolds with a length of 3 modules, for cascaded systems of Condexa PRO models 35÷135. The kit is developed on a length in which it is possible to connect up to 2 modules in a "front" or up to 6 modules (3+3) in a back-to-back configuration; it is possible to combine several manifold kits of this type for installations with a total power of 485 kW. Suitable for "front" or "back-to-back" configurations. Kit consisting of: • No.2 Ø 3"hydraulic manifolds (delivery and return) insulated and with DN80 flanged connections; • No.1 Ø 2" gas manifold with 2" G.M. threaded connections • Condensate drain manifold • Complete set of tube-clamp collars, nuts and gaskets The closing caps are not included in the kit and must be provided separately with a special code.	●	●	●	●	●	●	●	●
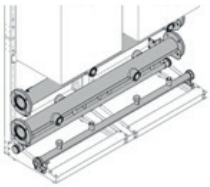	**5" manifolds kit for connecting 2 boilers in a cascade system**: hydraulic manifolds with a length of 2 modules, for cascaded systems of Condexa PRO models 35÷135. The kit is developed on a length in which it is possible to connect up to 2 modules in a "front" or up to 4 modules (2+2) in a back-to-back configuration; it is possible to combine several manifold kits of this type for installations with a total power of 1120 kW. Suitable for "front" or "back-to-back" configurations. Kit consisting of: • No.2 Ø 5" hydraulic manifolds (delivery and return) insulated and with DN125 flanged connections; • 1 Ø 3"gas manifold with DN80 flanged connections; • Condensate drain manifold • Complete set of tube-clamp collars, nuts and gaskets The closing caps are not included in the kit and must be provided separately with a special code.			●	●	●	●	●	●

		CONDEXA PRO							
Image	**Description**	**35 P**	**50 P**	**57 P**	**70 P**	**90**	**100**	**115**	**135**
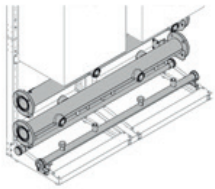	**5" manifolds kit for connecting 3 boilers in a cascade system**: hydraulic manifolds with a length of 3 modules, for cascaded systems of Condexa PRO models 35÷135. The kit is developed on a length in which it is possible to connect up to 3 modules in a "front" or up to 6 modules (3+3) in a back-to-back configuration; it is possible to combine several manifold kits of this type for installations with a total power of 1120 kW. Suitable for "front" or "back-to-back" configurations. Kit consisting of: • No.2 Ø 5" hydraulic manifolds (delivery and return) insulated and with DN125 flanged connections; • 1 Ø 3"gas manifold with DN80 flanged connections; • Condensate drain manifold • Complete set of tube-clamp collars, nuts and gaskets. The closing caps are not included in the kit and must be provided separately with a special code.			●	●	●	●	●	●
	Closing caps kit 3 ": set of flanges and caps for 3 "manifolds The kit closes the hydraulic manifolds on the opposite side to that of connection with the plant. It Includes: • No.2 DN80 PN6 blind flanges for 3" delivery/ return water manifolds • No.1 threaded cap for 2" gas manifold • No.1 cap for collector condensate drain • Gaskets • Fixing bolts	●	●	●	●	●	●	●	●
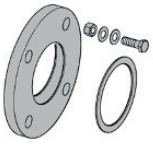	**3" Flange kit**: DN80 PN6 (to weld) flat counter-flange for connection to 3" manifolds The kit includes: • DN80 PN6 flange • Gasket • Fixing bolts	●	●	●	●	●	●	●	●
	Closing caps kit 5": set of flanges and caps for 5" manifolds The kit closes the hydraulic manifolds on the opposite side to that of connection with the plant. It Includes: • No.2 DN125 PN6 blind flanges for 5" delivery/ return water manifolds • No.1 DN80 PN6 blind flanges for 3" gas manifold • No.1 cap for collector condensate drain • Gaskets			●	●	●	●	●	●
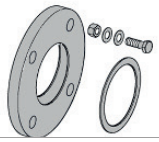	**5" Flange kit PN6 DN125**: DN125 PN6 (to weld) flat counter-flange for connection to 5" manifolds • DN125 PN6 flange • Gasket • Fixing bolts			●	●	●	●	●	●
	Cover with insulation for cascade collectors/ pipes: it covers the area below the Condexa PRO 35÷135 thermal modules for FRONT and BACK-BACK cascade systems The kit is installed both with 3" and 5" manifolds, increasing the thermal insulation of the hydraulic unit below the module. Same aestetichs of the boiler	●	●	●	●	●	●	●	●

Image	Description	CONDEXA PRO							
		35 P	50 P	57 P	70 P	90	100	115	135
Manifolds and safety accessories.									

Safety valves selection table

Total cascade power output (kW)	0-460	461-580	581-920	921-1160
(N°) Diameter safety valve	1 x ¾"	1 x 1"	2 x ¾ "	2 x 1"
	1 x cod. 20023104	1 x cod. 20023106	2 x cod. 20023104	2 x cod. 20023106

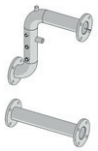	**Manifold kit for housing 3" safety devices**:3" delivery and return manifold for connection to hydraulic separator or plate heat exchanger. The delivery manifold is preparated with the connections for housing safety devices. DN80 PN6 flanged connections.	●	●	●	●	●	●	●	●
	Manifold kit for housing 5" safety devices:3" delivery and return manifold for connection to hydraulic separator or plate heat exchanger. The delivery manifold is preparated with the connections for housing safety devices. DN125 PN6 flanged connections.			●	●	●	●	●	●
	Primary circuit pump up to 270 kW: circulation pump kit for primary circuit for cascade systems up to 270 kW. The kit includes: • delivery manifold (with housing con safety devices) • WILO STRATOS 65 /1-9 230V single-body primary circulator. Safety devices are not included in the kit and have to be provided separately with specific codes. DN80 PN6 (3") flanged connections.	●	●	●	●	●	●	●	●
	Primary circuit pump kit up to 485 kW: circulation pump kit for primary circuit for cascade systems up to 485 kW. The kit includes: • delivery manifold (with housing con safety devices) • RIELLO VegA RMDA 65-90 230V single-body primary circulator. Safety devices are not included in the kit and have to be provided separately with specific codes. DN80 PN6 (3") flanged connections.	●	●	●	●	●	●	●	●
	Primary circuit pump kit up to 580 kW: circulation pump kit for primary circuit for cascade systems up to 580 kW. The kit includes: • delivery manifold (with housing con safety devices) • RIELLO VegA RMDA 65-90 230V single-body primary circulator. Safety devices are not included in the kit and have to be provided separately with specific codes. DN125 PN6 (5") flanged connections.			●	●	●	●	●	●
	Primary circuit pump kit up to 1120 kW: circulation pump kit for primary circuit for cascade systems up to 1120 kW. The kit includes: • delivery manifold (with housing con safety devices) • RIELLO VegA RMDA 80-90 230V single-body primary circulator. Safety devices are not included in the kit and have to be provided separately with specific codes. DN125 PN6 (5") flanged connections.			●	●	●	●	●	●

		CONDEXA PRO							
Image	**Description**	**35 P**	**50 P**	**57 P**	**70 P**	**90**	**100**	**115**	**135**
	Primary circuit twin pump up to 270 kW: circulation pump kit for primary circuit for cascade systems up to 270 kW. The kit includes: • delivery manifold (with housing con safety devices) • WILO STRATOS D 65 / 1-12 230V twin primary circulator . Safety devices are not included in the kit and have to be provided separately with specific codes. DN80 PN6 (3") flanged connections.	●	●	●	●	●	●	●	●
	Primary circuit twin pump up to 485 kW: circulation pump kit for primary circuit for cascade systems up to 485 kW. The kit includes: • delivery manifold (with housing con safety devices) • RIELLO VegA RGDA 65-90 230V twin primary circulator . Safety devices are not included in the kit and have to be provided separately with specific codes. DN80 PN6 (3") flanged connections.	●	●	●	●	●	●	●	●
	Primary circuit twin pump up to 580 kW: circulation pump kit for primary circuit for cascade systems up to 580 kW. The kit includes: • delivery manifold (with housing con safety devices) • RIELLO VegA RGDA 65-90 230V twin primary circulator . Safety devices are not included in the kit and have to be provided separately with specific codes. DN125 PN6 (5") flanged connections.			●	●	●	●	●	●
	Primary circuit twin pump up to 1120 kW: circulation pump kit for primary circuit for cascade systems up to 1120 kW. The kit includes: • delivery manifold (with housing con safety devices) • RIELLO VegA RGDA 80-90 230V twin primary circulator. Safety devices are not included in the kit and have to be provided separately with specific codes. DN125 PN6 (5") flanged connections.			●	●	●	●	●	●
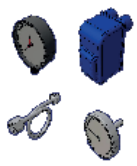	**Safety kit**: set of safety devices. The kit includes: • Thermometer • Pressure gauge • Safety pressure switch Notes: • The kit does not include safety valve and fuel shut-off valve, to be ordered separately in relation to the maximum power of the system • Others safety devices (minimum pressure switch, flowmeter, safety thermostat and delivery temperature regolation) are located inside each boiler	●	●	●	●	●	●	●	●
	Safety valve up to 40 kW (5,4 bar ØG.¾'' F) Setting pressure: 5.4 bar Maximum discharge capacity: 460 kW	●	●	●	●	●	●	●	●

		CONDEXA PRO							
Image	**Description**	**35 P**	**50 P**	**57 P**	**70 P**	**90**	**100**	**115**	**135**
	Safety valve up to 580 kW (5.4 bar 1 "F): ø1"G safety valve. Setting pressure: 5.4 bar Maximum discharge capacity: 580 kW			●	●	●	●	●	●
	Fuel shut-off valve (VIC) – ø G.1"-TS=97°C: 1" positive action fuel shut-off valve (VIC) with manual reset. Thermostatic element with expansion of liquid with 97°C cut-off temperature (±3 °C): capillary lenght 5 mt. Sensor sheath connection 1/2 "M (complete with 1/2" F x 3/4 "M Nipple). Operating limit: 131 kW with gas supply pressure=20 mbar. Conforming to the INAIL standard: • DM 1/12/1975 Collection R (ed. June '82) and subsequent updates • PED 97/23 / CEE, ATEX 94/9 / CEE approved	●	●	●	●	●	●	●	●
	Fuel shut-off valve (VIC) – ø G.1"½-TS=97°C: 1"½ positive action fuel shut-off valve (VIC) with manual reset. Thermostatic element with expansion of liquid with 97°C cut-off temperature (±3 °C): capillary lenght 5 mt. Sensor sheath connection 1/2 "M (complete with 1/2" F x 3/4 "M Nipple). Operating limit: 230 kW with gas supply pressure=20 mbar. Conforming to the INAIL standard: • DM 1/12/1975 Collection R (ed. June '82) and subsequent updates • PED 97/23 / CEE, ATEX 94/9 / CEE approved	●	●	●	●	●	●	●	●
	Fuel shut-off valve (VIC) – ø G.2"-TS=97°C: 2" positive action fuel shut-off valve (VIC) with manual reset. Thermostatic element with expansion of liquid with 97°C cut-off temperature (±3 °C): capillary lenght 5 mt. Sensor sheath connection 1/2 "M (complete with 1/2" F x 3/4 "M Nipple). Operating limit: 580 kW with gas supply pressure=20 mbar. Conforming to the INAIL standard: • DM 1/12/1975 Collection R (ed. June '82) and subsequent updates • PED 97/23 / CEE, ATEX 94/9 / CEE approved	●	●	●	●	●	●	●	●
	Fuel shut-off valve (VIC) up to 1150 kW: 3" positive action fuel shut-off valve (VIC) with manual reset. Thermostatic element with expansion of liquid with 97°C cut-off temperature (±3 °C): capillary lenght 5 mt. Sensor sheath connection 1/2 "M (complete with 1/2" F x 3/4 "M Nipple). Operating limit: 1150 kW with gas supply pressure=20 mbar. Conforming to the INAIL standard: • DM 1/12/1975 Collection R (ed. June '82) and subsequent updates • PED 97/23 / CEE, ATEX 94/9 / CEE approved	●	●	●	●	●	●	●	●

		CONDEXA PRO							
Image	**Description**	**35 P**	**50 P**	**57 P**	**70 P**	**90**	**100**	**115**	**135**
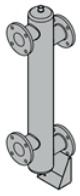	**5'' hydraulic separator kit – up to 485 kW**: separator with 5'' of body and 3'' of hydraulic connections diameter, flanged DN80 PN6 . It allows the hydraulic separation between the primary circuit and the secondary circuit, balancing the differences in flow between the circuits. The hydraulic separator is necessary for the systems where a "zero" flow rate can occur.	●	●	●	●	●	●	●	●
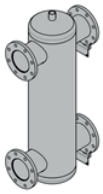	**10'' hydraulic separator kit – up to 580 kW**: separator with 10'' of body and 5'' of hydraulic connections diameter, flanged DN125 PN6 . It allows the hydraulic separation between the primary circuit and the secondary circuit, balancing the differences in flow between the circuits. The hydraulic separator is necessary for the systems where a "zero" flow rate can occur.			●	●	●	●	●	●
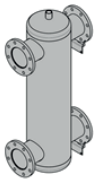	**10'' hydraulic separator – up to 1120 kW**: separator with 10'' of body and 5'' of hydraulic connections diameter, flanged DN125 PN6 . It allows the hydraulic separation between the primary circuit and the secondary circuit, balancing the differences in flow between the circuits. The hydraulic separator is necessary for the systems where a "zero" flow rate can occur.				●	●	●	●	●
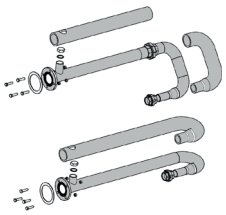	**Fittings kit for plate heat exchanger (DN80 PN6 manifold side, 3''/DN50 G 2'' PHE side)**: kit for ambidextrous connection of the safety manifold to the SP 35 – DN50 plate heat exchanger series. The kit includes: • Delivery manifold with insulation (includes the unit to connect the ACS tank circulation pump) • Return manifold with insulation (includes the unit to connect the ACS tank circulation pump) • Gaskets • Plate exchanger support frame with adjustable feet	●	●	●	●	●	●	●	●
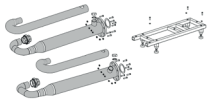	Fittings kit for plate heat exchanger (DN125 PN6 manifold side, 5''/DN65 G 2''1/2 PHE side): kit for ambidextrous connection of the safety manifold to the SP 40 – DN65 plate heat exchanger series. The kit includes: • Delivery manifold with insulation (includes the unit to connect the ACS tank circulation pump) • Return manifold with insulation (includes the unit to connect the ACS tank circulation pump) • Gaskets • Plate exchanger support frame with adjustable feet			●	●	●	●	●	●
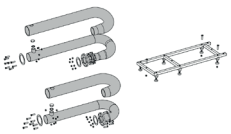	Fittings kit for plate heat exchanger (DN125 PN6 manifold side, 5''/DN100 PN16 PHE side): kit for ambidextrous connection of the safety manifold to the SP 60 – DN100 plate heat exchanger series. The kit includes: • Delivery manifold with insulation (includes the unit to connect the ACS tank circulation pump) • Return manifold with insulation (includes the unit to connect the ACS tank circulation pump) • Gaskets • Plate exchanger support frame with adjustable feet					●	●	●	●

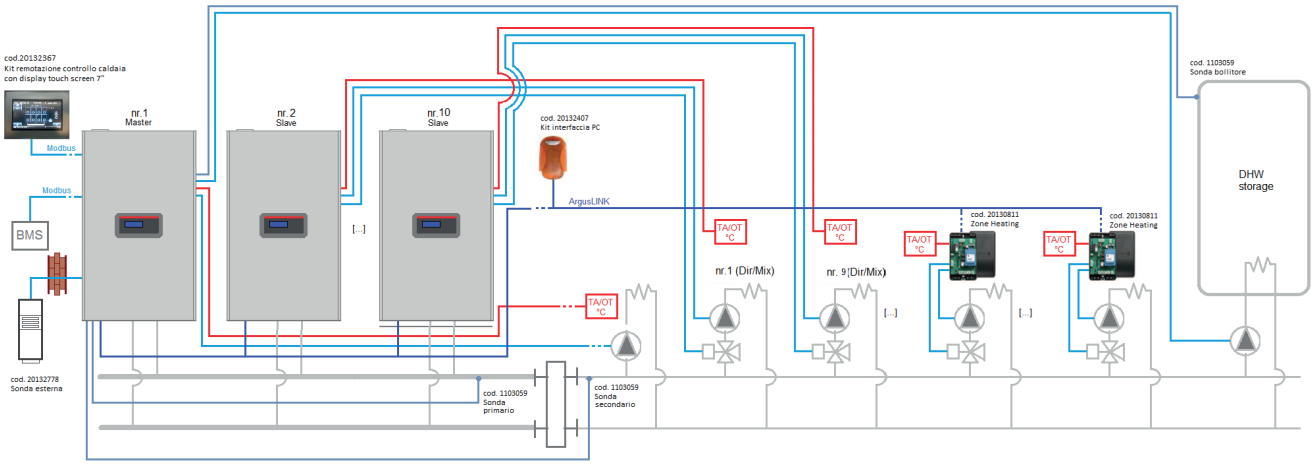

Image	Description	CONDEXA PRO 35 P	50 P	57 P	70 P	90	100	115	135
Secondary circuit management									
	Secondary/tank probe: NTC probe for temperature control both for the tank circuit and for the heating circuit. Cable length: 2200 mm.	●	●	●	●	●	●	●	●
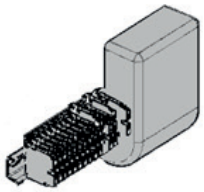	Electronic management kit for single direct or additional mixed zone (max 16): kit for the management of additional heating zone, direct or mixed. It consists of an electronic control device completely wired to the terminal board, installed on a DIN bar so that it can be installed in a box in the electrical control panel in the central heating. The electronic module is connected to the boiler board by means of a communication bus and allows the manage-ment of the zone with a dedicated climatic curve. Features • Direct or mixed zone control • Three way valve management • Zone circulation pump control • Input for TA or OT probe	●	●	●	●	●	●	●	●
Sealed combustion transformation kit (type C)									
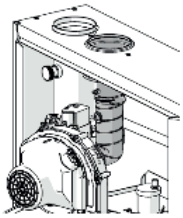	Type C/35-70 conversion kit: kit used for sealed combustion (type C) for 35÷70 Condexa PRO models. In cases where the boiler must be made watertight with respect to the environment. It is not mandatory in cases falling within the DM 12/04/1996. This accessory allows the connection of the boiler to the split ø80 mm flue discharge/ air duct. Composed by: ø80 mm fitting for combustion air duct connection pipe with fan connection air duct pressure detection tube	●	●	●	●				
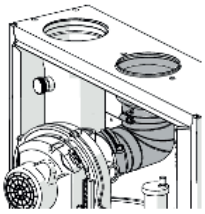	Type C/90-135 conversion kit: kit used for sealed combustion (type C) for 90÷135 Condexa PRO models. In cases where the boiler must be made watertight with respect to the environment. It is not mandatory in cases falling within the DM 12/04/1996. This accessory allows the connection of the boiler to the split ø80 mm flue discharge/ air duct. Composed by: ø110 mm fitting for combustion air duct connection pipe with fan connection air duct pressure detection tube					●	●	●	●

Image	Description	CONDEXA PRO 35 P	50 P	57 P	70 P	90	100	115	135
Flue system									

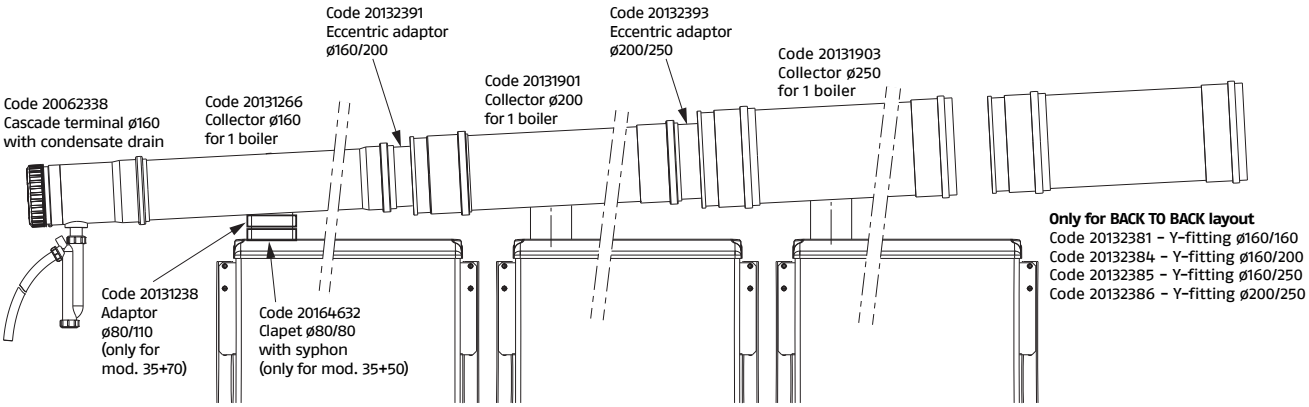

FRONT configuration - max 10 boilers

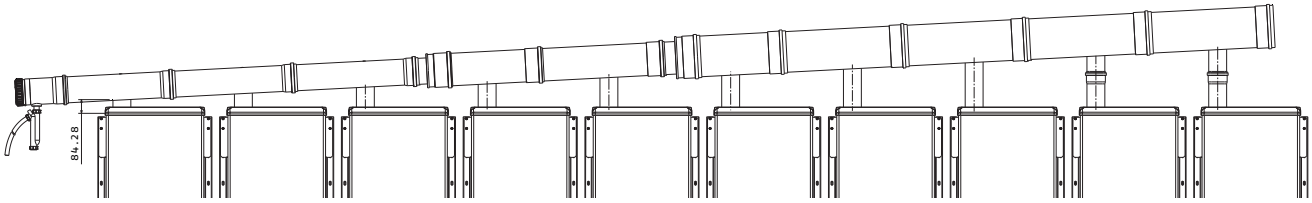

BACK-TO-BACK configuration - max 5+5 boilers

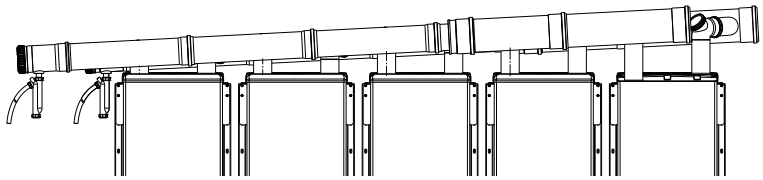

Table for selection of flue gas collector in relation to nr. boilers on a single manifold

Model	CONDEXA PRO 35 P	CONDEXA PRO 50 P	CONDEXA PRO 57 P	CONDEXA PRO 70 P	CONDEXA PRO 90	CONDEXA PRO 100	CONDEXA PRO 115	CONDEXA PRO 135
Boiler heat output kW	**35**	**45**	**57**	**68**	**90**	**97**	**112**	**131**
No. boilers	FLUE/AIR COLLECTORS DIAMETER							
1ª	Ø160	Ø160	Ø160	Ø160	Ø160	Ø160	Ø160	Ø160
2ª	160	160	160	160	160	160	160	160
3ª	160	160	160	160	160	160	160	160
4ª	160	160	160	160	160	160	160	200
5ª	160	160	160	160	200	200	200	200
6ª	160	160	160	160	200	200	200	250
7ª	160	160	160	200	200	200	250	250
8ª	160	160	200	200	250	250	250	250
9ª	160	160	200	200	250	250	250	-
10ª	160	200	200	200	250	250	250	-

NB: For the related pairing, refer to the tables in the Catalog.

		CONDEXA PRO							
Image	**Description**	**35 P**	**50 P**	**57 P**	**70 P**	**90**	**100**	**115**	**135**
Fumes exhaust systems for models 35-70									
	Adapter ø80 / ø110: adaptation cup (reduction of flue discharge diameter)	●	●	●	●				
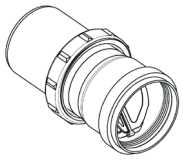	**Clapet with siphon DN 80:** Smoke-exhaust flue non-return valve dedicated to the Condexa PRO 35P and 50P models	●	●						
Flue exhaust systems for all models 35-135 - suction/discahrge system with collectors ø160 / 200/250 mm									
	Cascade terminal Ø160 with condensate drain	●	●	●	●	●	●	●	●
	Collector Ø160 for 1boiler	●	●	●	●	●	●	●	●
	Eccentric adapter ø160/200	●	●	●	●	●	●	●	●
	Collector Ø200 for 1boiler		●	●	●	●	●	●	●
	Eccentric adapter ø200/250					●	●	●	●
	Collector Ø250 for 1boiler					●	●	●	●

		CONDEXA PRO							
Image	**Description**	**35 P**	**50 P**	**57 P**	**70 P**	**90**	**100**	**115**	**135**
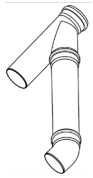	**Y-fitting Ø160/160**	●	●	●	●	●	●	●	●
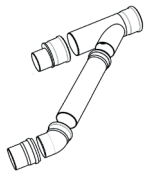	**Y-fitting Ø160/200**		●	●	●	●	●	●	●
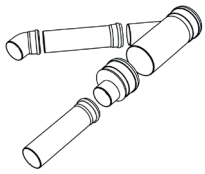	**Y-fitting Ø160/250**					●	●	●	●
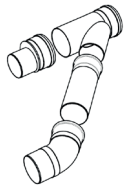	**Y-fitting Ø200/250**					●	●	●	●
Treatment systems for neutralising condensate									
	HN2 type condensate neutraliser for condensing gas boilers up to 280 kW:HN3 type condensate neutraliser for condensing gas boilers up to 270 kW. The system allows to increase the pH of the condensate deriving from the exhaust fumes of condensing boilers to values between 6.5 and 9 to allow their disposal through the common sewer system. The kit is suitable for those systems equipped with a condensate drain in the thermal plant located higher than the condensate discharge of the boiler. The maximum head that the pump can win is given by its own maximum head, less the resistance offered by the discharge pipe. The pump is controlled by an electrical level contact. The electrical connections have an IP54 electrical protection rating.	●	●	●	●	●	●	●	●
	HN3 type condensate neutraliser for condensing gas boilers from 280 up to 750 kW. HN3 type condensate neutraliser for condensing gas boilers from 270 up to 750 kW. The system allows to increase the pH of the condensate deriving from the exhaust fumes of condensing boilers to values between 6.5 and 9 to allow their disposal through the common sewer system.The kit is suitable for those systems equipped with a condensate drain in the thermal plant located higher than the condensate discharge of the boiler. The maximum head that the pump can win is given by its own maximum head, less the resistance offered by the discharge pipe. The pump is controlled by an electrical level contact. The electrical connections have an IP54 electrical protection rating.	●	●	●	●	●	●	●	●

		CONDEXA PRO							
Image	**Description**	**35 P**	**50 P**	**57 P**	**70 P**	**90**	**100**	**115**	**135**
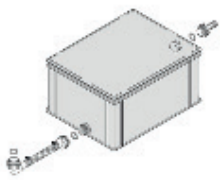	**N2 neutralizer kit up to 450 kW**: N2 type condensate neutraliser for condensing gas boilers up to 450 kW. The system allows to increase the pH of the condensate deriving from the exhaust fumes of condensing boilers to values between 6.5 and 9 to allow their disposal through the common sewer system. The kit is designed for systems equipped with a condensate drain trap in the thermal plant located lower than the boiler condensate drain and which therefore has a natural slope. Therefore, they do not require a pump and relative electrical connections.	●	●	●	●	●	●	●	●
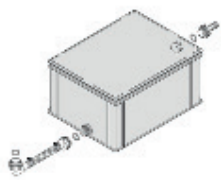	**N3 neutralizer kit from 450 up to 1500 kW**: N3 type condensate neutraliser for condensing gas boilers from 450 kW up to 1500 kW. The system allows to increase the pH of the condensate deriving from the exhaust fumes of condensing boilers to values between 6.5 and 9 to allow their disposal through the common sewer system. The kit is designed for systems equipped with a condensate drain trap in the thermal plant located lower than the boiler condensate drain and which therefore has a natural slope. Therefore, they do not require a pump and relative electrical connections.			●	●	●	●	●	●
COMPLEMENTS FOR MAINTENANCE AND SERVICE for all models 35-135 – for stand-alone boilers and cascade systems									
	PC interface kit: accessory dedicated to the service which consists of a connection interface (and in the relative PC program) to connect the PC to the boilers directly on the communication BUS. It allows diagnosis to be made based on the generator operating history and its calibration (possibility of accessing all parameters and changing them in real time) PC interface kit: accessory dedicated to SERVICE which consists of a connection interface (and in the related PC program) to connect the PC to the boilers directly on the communication BUS. It allows diagnosis to be made based on the generator operating history and its calibration (possibility of accessing all the parameters and changing them in real time).	●	●	●	●	●	●	●	●

90-100-115 kW models

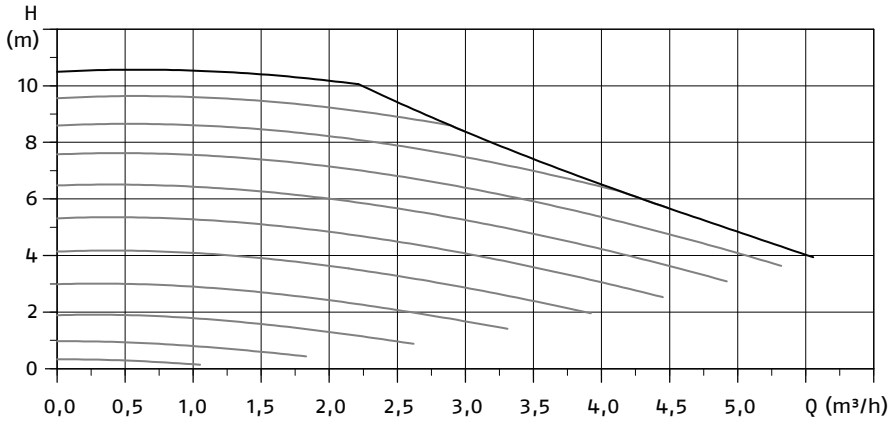

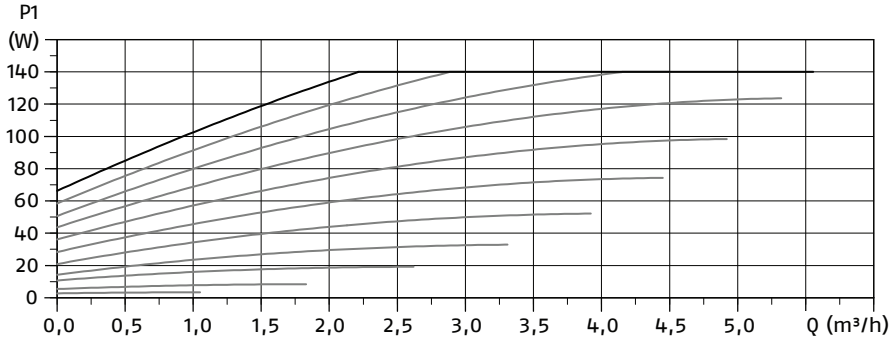

115 kW /135kW low head models

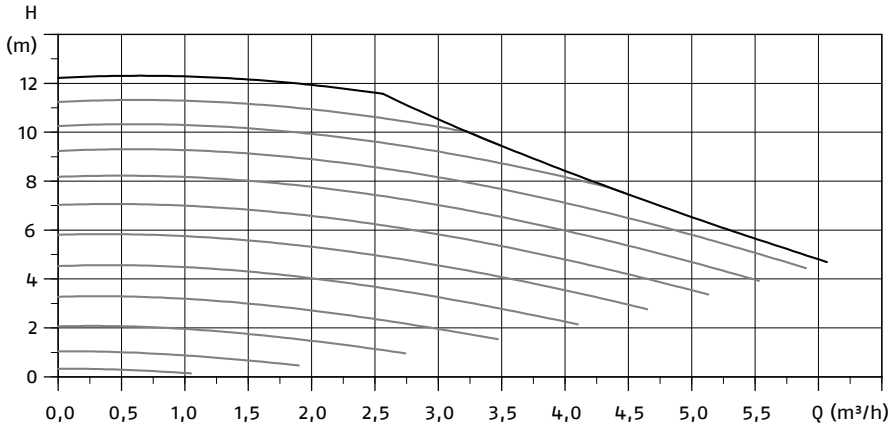

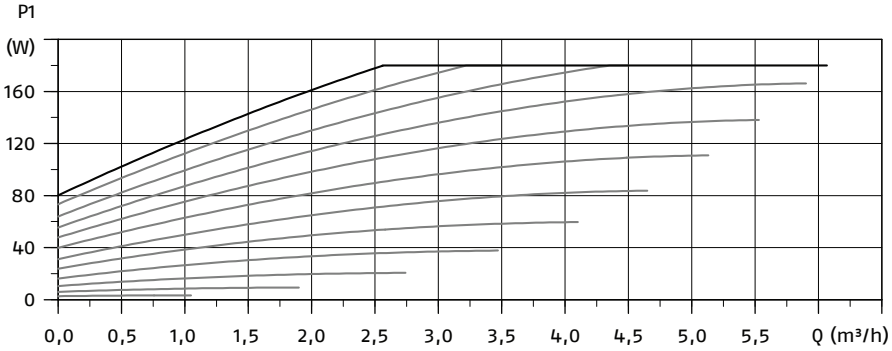

135 kW high head models

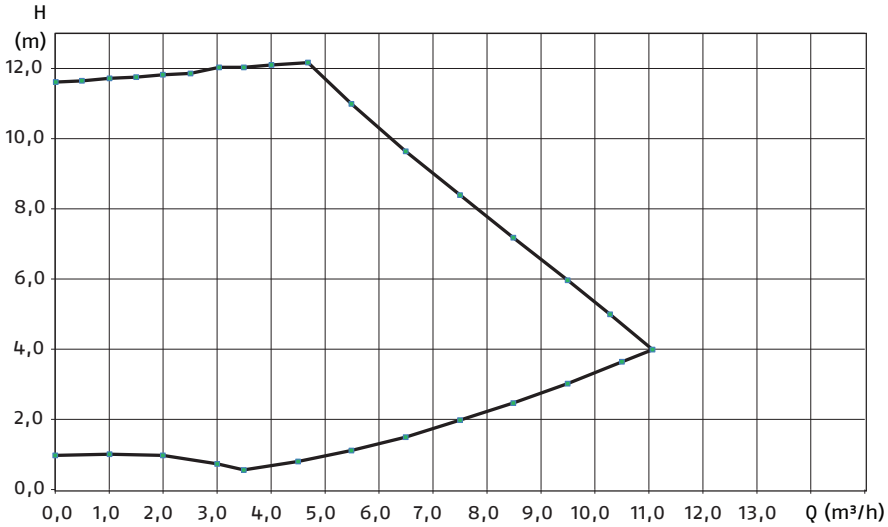

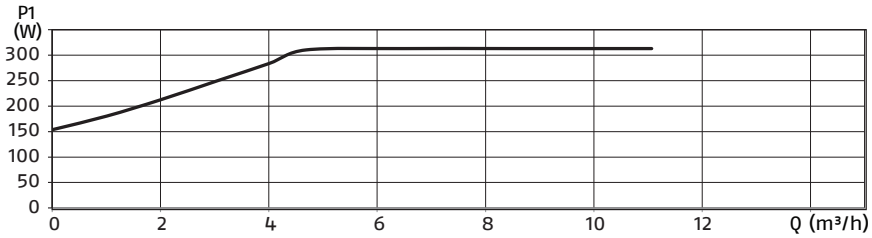

Primary circuit pump kit up to 270 kW

The kit must be used in combination with 2-way valves and includes the socket for housing the safety devices and the primary circuit circulator (single or twin).
Pipes with flanged connection DN 80 PN6.

Single pump kit

Curves WILO STRATOS 65/1 - 9

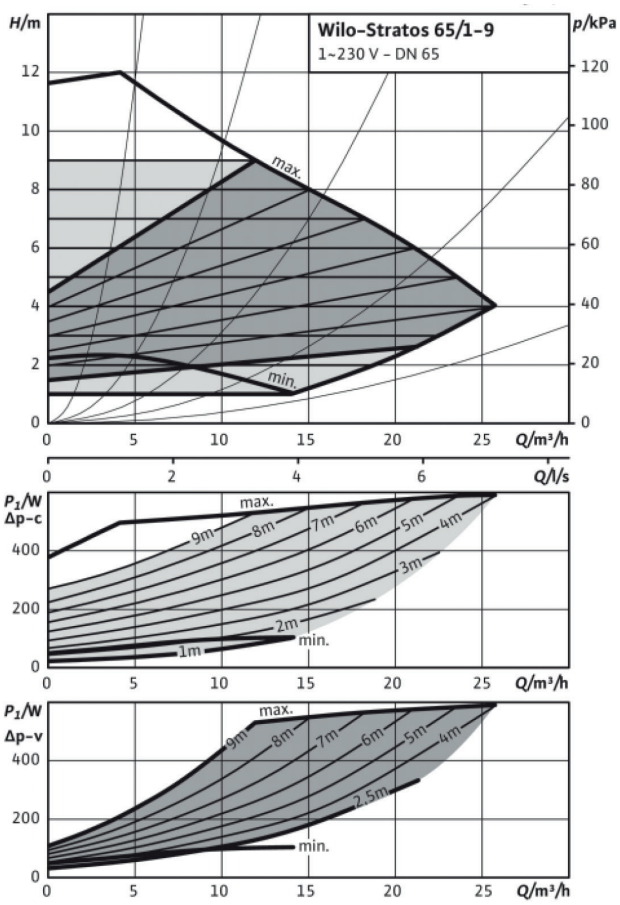

Twin pump kit

Curves WILO STRATOS D 65/1 - 12

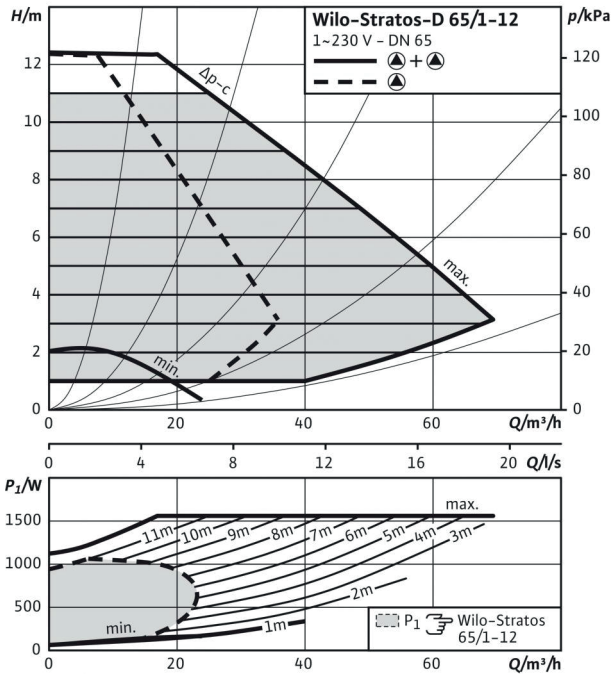

Starting frequency:
- Activation/deactivation with mains voltage ≤ 20/24 h
- Activation/deactivation with communication module (1 for each electric motor) ≤ 20/h

Primary circuit pump kit up to 485 kW and 580 kW

The kit must be used in combination with 2-way valves and includes the socket for housing the safety devices and the primary circuit circulator (single or twin).
Pipes with DN 80 PN6 flange connection for the version up to 485 kW and DN125 PN6 for the 580 kW version.

Single pump kit

VEGA RMDA 65-90

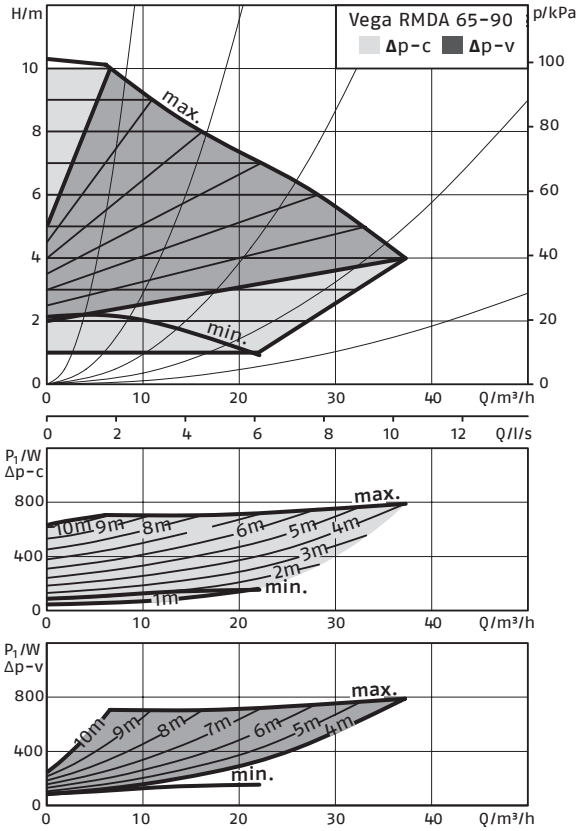

Twin pump kit

VEGA RGDA 65-90

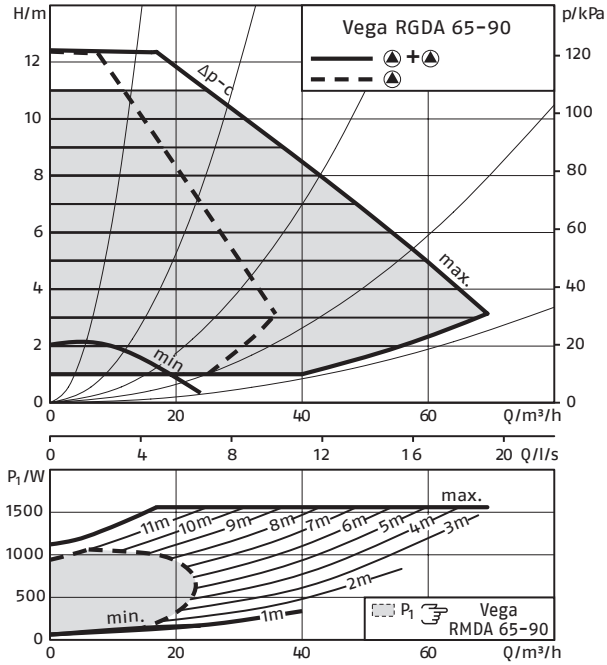

Starting frequency:
- Activation/deactivation with mains voltage ≤ 20/24 h
- Activation/deactivation with communication module (1 for each electric motor) ≤ 20/h

Primary circuit pump kit up to 1120 kW

The kit must be used in combination with 2-way valves and includes the socket for housing the safety devices and the primary circuit circulator (single or twin).
Pipes with flanged connection DN 125 PN6.

Single pump kit

VEGA RMDA 80-90

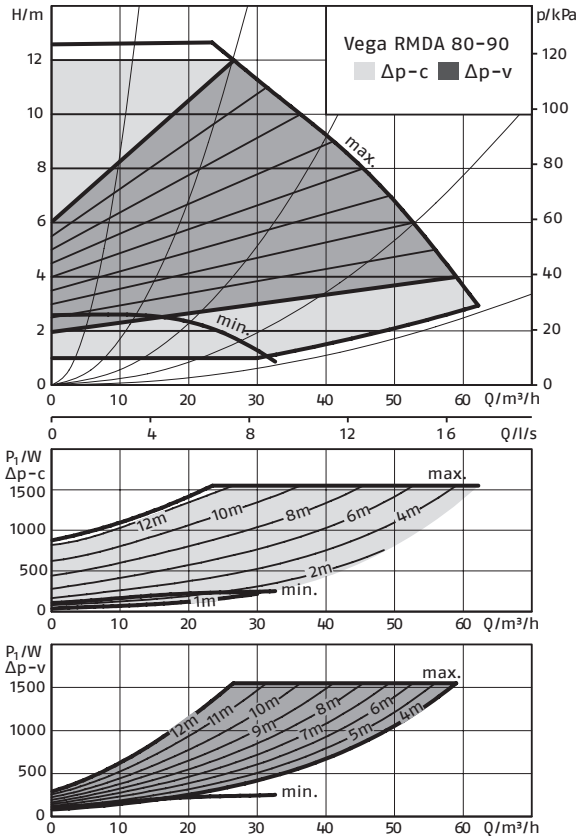

Twin pump kit

VEGA RGDA 80-90

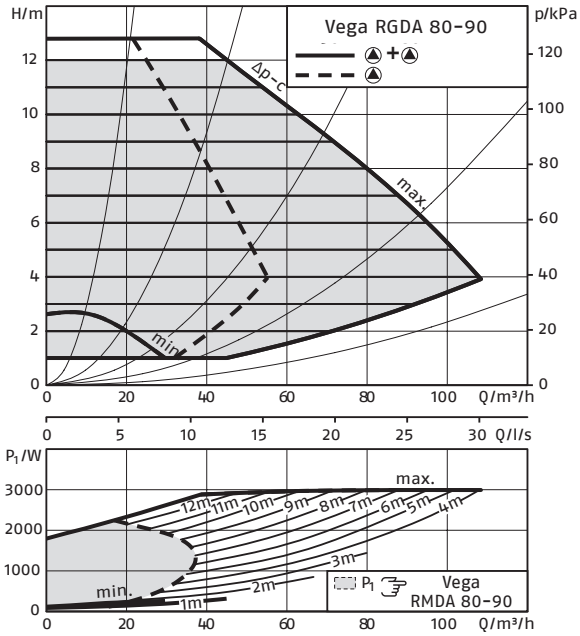

Starting frequency:
- Activation/deactivation with mains voltage ≤ 20/24 h
- Activation/deactivation with communication module (1 for each electric motor) ≤ 20/h

CONFIGURATION OF THE MAIN BLOCK DIAGRAMS

Optimal use of the modules in cascade occurs by placing a hydraulic separator (available as an accessory) between the primary system (thermal modules in cascade for thermal generation) and the secondary system (users, such as heat distribution systems, DHW production). This device allows a different flow rate to be compensated between the primary and secondary systems.

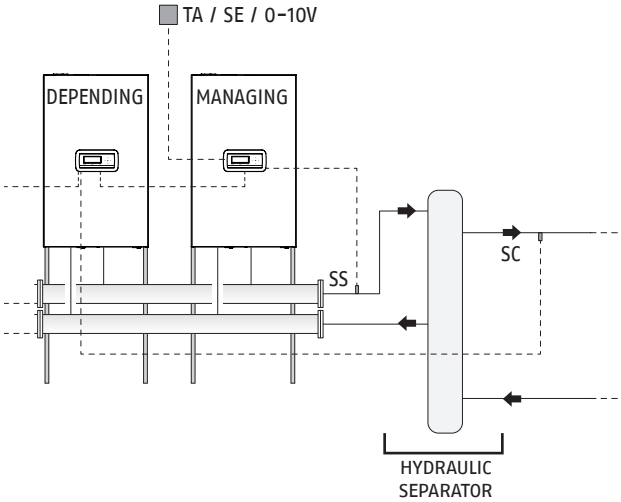

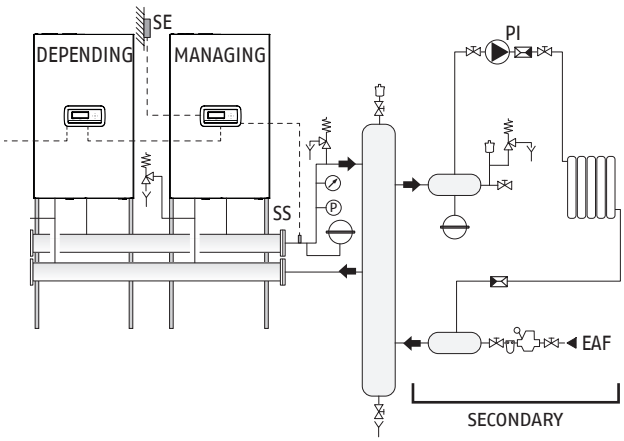

The secondary system can be configured using the following accessories:

- Secondary sensor (SC): This is required in order to manage the setpoint, and therefore the required temperature, downstream of the hydraulic separator. The secondary sensor is connected to the controller of the first "Depending" module.
- Hot water tank sensor (SB): This is required in order to manage the production of DHW in combination with a hot water tank circulator (PB). The hot water tank sensor is connected to the controller of the "Managing" module.

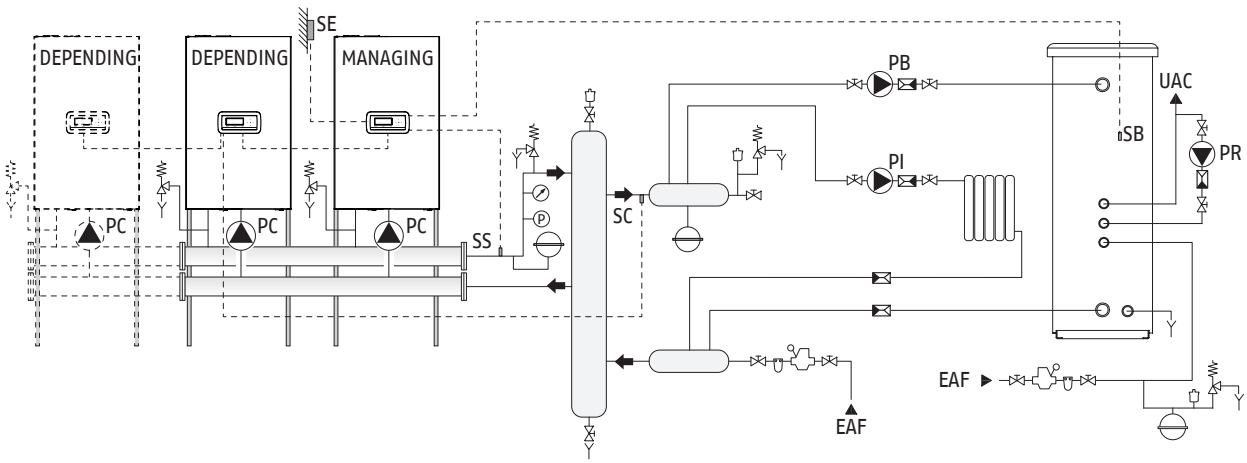

- Zone sensor (S2): This is required to adjust and control an additional direct zone managed by the "Depending" thermal module in combination with the zone circulator (P2). The zone sensor is used to adjust and control an additional mixed zone in combination with the zone circulator (P2) and the mixer valve (V2). The zone sensor (S2), circulator (P2) and the mixer valve (if present) (V2) must be connected to the "Depending" thermal module, which communicates via bus with the "Managing" thermal module.

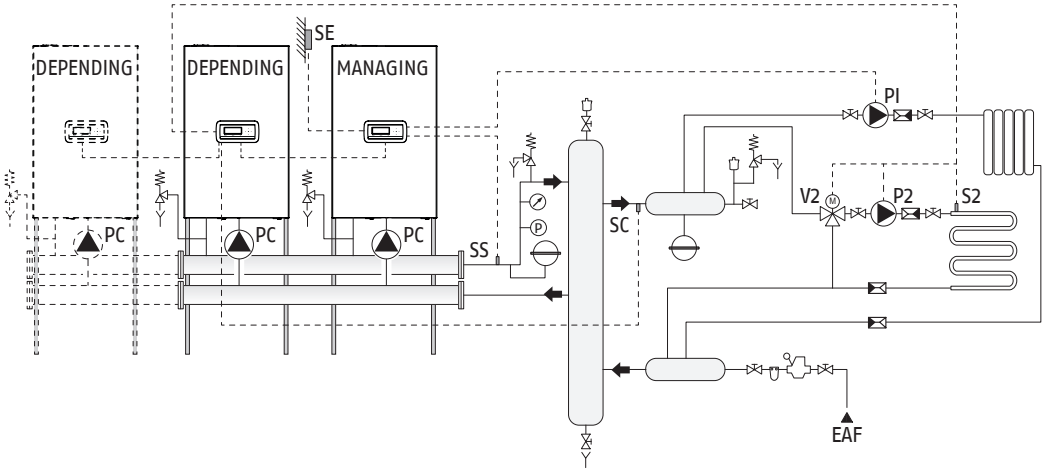

- Zone sensor (S3): This is required to adjust and control an additional direct zone in combination with an electronic device for zone management (ZM) and the zone circulator (P3). The zone sensor is used to adjust and control an additional mixed direct zone in combination with an electronic device for zone management (ZM), the zone (P3) circulator and the mixer valve (V3). The zone sensor (S3), the circulator (P3) and the mixer valve (if present) (V3) must be connected to the electronic device for zone management (ZM), which communicates via Bus with the "Managing" thermal module.

To make the electrical connections, refer to the wiring diagrams of the selected system.
For the Bus connection mode, refer to the section "System management".

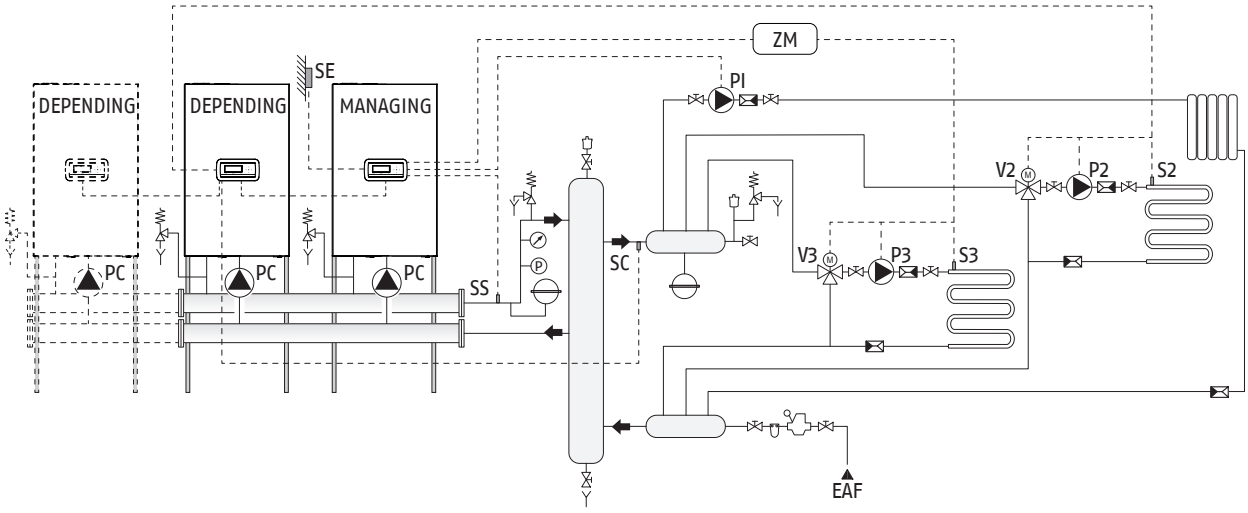

DESCRIPTION FOR SPECIFICATIONS

Condexa PRO is a pre-mixed condensing thermal module, consisting of a modulating thermal element.
It is available in 8 models, starting from 35 kW up to 131kW.
The optimal combustion management allows high efficiency up to over 109%, value calculated on the PCI, in the condensation regime, and low polluting emissions – Class 6 according to UNI EN 15502-1.
The thermal module is designed for open chamber operation, but can be converted to a sealed chamber using the appropriate accessory.
The standard configuration device is intended for indoor installation ensuring IPX4D protection degree.
It is possible to install Condexa PRO appliances in cascade up to a maximum power of 1.12 MW.
The main technical features of the appliance are:

- Premixing burner with constant air-gas ratio;
- Heat exchanger with patented geometries, consisting of two smooth concentric stainless steel tubes, each having a pentagonal section inside and a circular outside, designed to maximize the exchange surface, offer maximum corrosion resistance and the possibility of working with high δT (up to 40°C) reducing set-up times;
- Module power from 35 to 131 kW, with possible cascades of modules with the same power
- Maximum fumes outlet temperature 100°C;
- Microprocessor management and control with self-diagnosis shown through display and recording of the main errors;
- Anti-freeze function;
- External probe that enables climatic operation (accessory);
- Condensate drain syphon to avoid backflow of exhaust fumes into the environment (standard for 35 P and 50 P, accessory for other models)
- Predisposition for room thermostat/heat request on high and low temperature zones;
- Possibility to manage both a heating circuit and a circuit for the production of domestic hot water with storage;
- High efficiency and high residual head circulator for models up to 70 kW; for the other models, a circulator is available as an optional accessory.

SAFETY DEVICES

All the functions of the device are electronically controlled by a card approved to perform safety functions by means of a dual processor technology. Any anomaly causes the appliance stop and the gas valve automatic shutdown.

The following are installed on the water circuit:

- Safety thermostat;
- Flowmeter capable of continuously checking the flow rate of the primary circuit and causing the appliance to stop in the event of insufficient flow;
- Temperature probes on the flow and return that continuously measure the temperature difference between the incoming and outgoing fluid and allow the control to intervene;
- Minimum pressure switch.

The following are installed on the combustion circuit:

- Gas solenoid valve in class B + C, with pneumatic compensation of the gas flow according to the suction air flow rate;
- Ionization electrode for detection;
- Flue temperature probe;
- Smoke-exhaust flue non-return valve to avoid backflow in central heating (mandatory optional for 35 P, 50 P models, standard fot other models).

The triggering of safety devices indicates the malfunction of a potentially hazardous thermal module. Therefore, contact Technical Assistance Service immediately. After a brief pause, it is possible to try and restart the appliance (see Paragraph "Initial startup").

Safety devices must be replaced by Technical Assistance Service, using only original parts. Refer to the spare parts catalogue supplied with the appliance. After making the repair, check that the appliance is working properly.

The appliance must not be put in service, even temporarily, when tampered safety devices are not in operation or have been tampered with.

The Condexa PRO thermal modules comply with:

- Regulation (EU) 2016/426
- Directive 92/42/EEC on efficiency requirements and Annex E and Pres. Republic Decree n. 412, 26 August 1993 (****)
- Electromagnetic Compatibility Directive 2014/30/EU
- Low Voltage Directive 2014/35/EU
- Ecodesign Directive 2009/125/CE for energy-related products
- Regulation (EU) 2017/1369 Energy labelling
- Delegated Regulation (EU) No. 811/2013;
- Delegated Regulation (EU) No. 813/2013;
- Standard for gas-fired heating boilers – General requirements and tests – EN 15502-1
- Specific standard for type C appliances and type B2, B3 and B5 appliances of nominal heat input not exceeding 1000 kW – EN 15502-2/1
- SSIGA G1 gas directive
- AICAA Fire regulations
- CFST LPG directive part 2;
- Various cantonal and communal provisions on air quality and energy saving.

The Condexa PRO thermal module is supplied on a pallet, packed and protected by cardboard.
Inserted in a plastic bag placed inside the packaging, the following material is provided:

- Instruction booklet
- LPG conversion kit
- Bracket for wall fixing with dowels (n°4 dowels, d = 10mm, suitable for concrete, bricks, compact stone, perforated concrete block walls);
- Hydraulic test certificate
- Energy Label (for models <70kW).

RIELLO SpA – 37045 Legnago (VR)
Phone +39 0442 630111 – Fax +39 0442 630371
www.riello.com

The manufacturer strives to continuously improve all products. Appearance, dimensions, technical specifications, standard equipment and accessories are therefore liable to modification without notice.

RIELLO