BIOGAS BURNERS

PRODUCT OVERVIEW

Burners for BIOGAS combustion

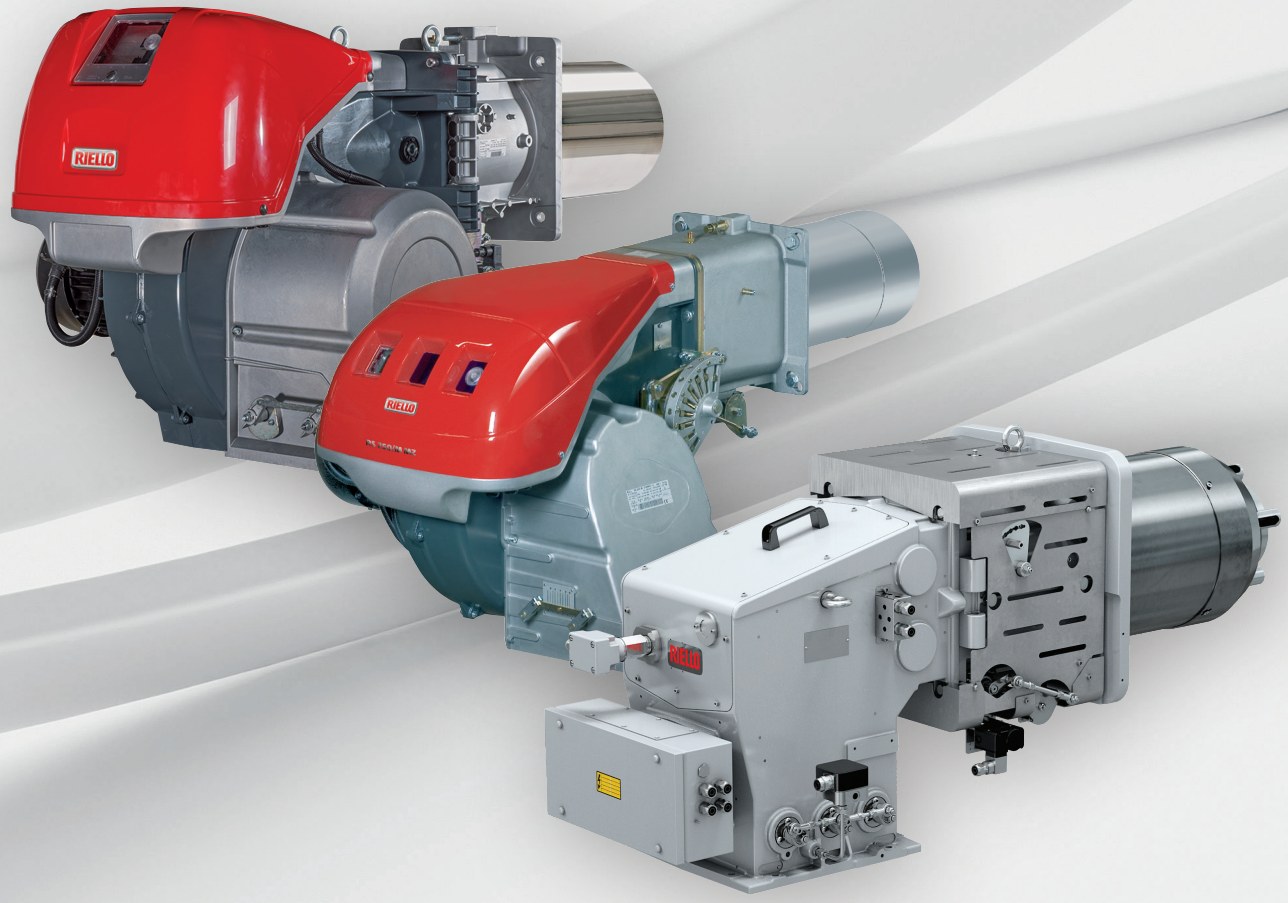

A Carrier Company

RIELLO
Energy For Life

www.riello.com

RIELLO
RS AND DB SERIES
BURNERS FOR BIOGAS

Biogas is a renewable energy source, produced from organic raw materials coming, for example, from agricultural, such as manure or vegetable waste, from municipal waste and food waste.
Biogas is an important resource because it allows the development of a circular economy, based on the recycling of natural organic materials.
The combustion of Biogas generates no net carbon dioxide and it can represent an important support in achieving the European targets of decarbonization.

MONOBLOCK BURNERS
RS SERIES

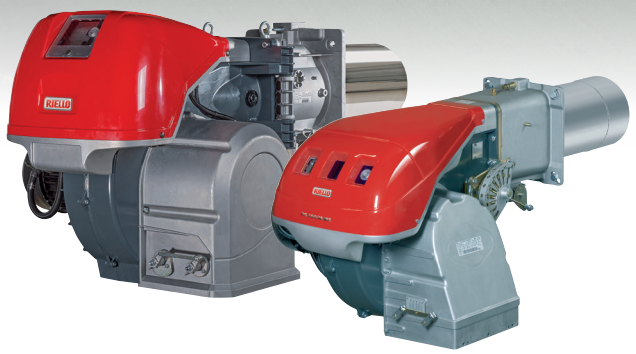

RS 310-810
1200÷6200 kW

RS 25-250
125÷2100 kW

DUAL-BLOCK BURNERS
DB SERIES

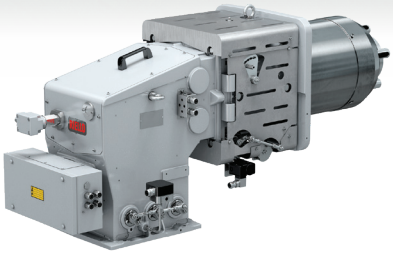

DB 4-6
1000÷6100 kW

RIELLO BIOGAS BURNERS, AN IMPORTANT MILESTONE FOR ENVIRONMENTAL SUSTAINABILITY

FOR MANY YEARS, RIELLO HAS BEEN INVOLVED IN SUPPLYING SOLUTIONS FOR COMBUSTION OF BIOGAS, ACTIVELY SUPPORTING THE DIFFUSION OF THIS RENEWABLE ENERGY SOURCE.

Specific models of RIELLO burners are suitable for combustion of a single source Biogas or for combustion of fuels from a dual source, Biogas and Natural gas; all the models are also suitable for combustion of Biomethane.
The burners of RS and DB series are the core of RIELLO's offer for Biogas combustion; covering a wide power output range, they are suitable with Mechanical Cam, for a simple management, or Electronic Cam in order to obtain a perfect output control.
The Biogas burners are derived from the standard products, so keeping the same reliability and robustness, but equipped with the needed solutions and upgrades to made them an ideal proposal for the renewable green gasses; they are developed based on European Standards indications and are conforming to the European Directives for EMC, Low Voltage and Machinery.
R**hey are designed for combustion of Biogas only or with a choice of Biogas or an alternative fuel.**
A selection of appropriate Gas Valve, suitable for the Biogas biochemical characteristics, complete the RIELLO offer on this application segment.
A team of Engineers is dedicated to support our customers in the selection of the right products and in the customization of the standard burners; for more information, please contact RIELLO Burners Commercial and Technical Department, our Application Engineers will be pleased to help you.

THE BIOGAS BURNERS ARE SPECIFICALLY DESIGNED FOR THIS RENEWABLE FUEL, FOR WHICH THE STANDARD MODELS ARE NOT SUITABLE. FOR REQUESTS ABOUT THE CODES OF BIOGAS BURNERS, PLEASE CONTACT RIELLO COMMERCIAL AND TECHNICAL DEPARTMENT: OUR APPLICATION ENGINEERS WILL BE PLEASED TO HELP YOU!

USE OF RENEWABLE ENERGY SOURCE

CLEAN COMBUSTION

MODULATING OPERATION

LONG OPERATION LIFE

EASY INSTALLATION

CUSTOMIZED SOLUTION

SUGGESTED MATCHING

OF FUEL – POWER OUTPUT – BURNERS RANGE

BURNERS RANGE (1)		POWER OUTPUT KW (2)	OPERATION	SINGLE SOURCE BIOGAS	DUAL SOURCE (3) BIOGAS / NATURAL GAS
Monoblock Standard combustion	R40 FS 10÷20	40÷170	One stage	•	
	RS 34÷250/M MZ	125÷2100	Mechanical cam	•	
	RS 34÷250/E-EV MZ	125÷2100	Electronic cam	•	
	RS 310÷610/M MZ	1300÷4900	Mechanical cam	•	
	RS 310÷610/E-EV MZ	1300÷4900	Electronic cam	•	
Monoblock Low NOx combustion	RS 25÷200/M BLU	125÷1900	Mechanical cam	•	
	RS 25÷200/E-EV BLU	125÷1900	Electronic cam	•	•
	RS 310÷810/M BLU	1200÷6200	Mechanical cam	•	
	RS 310÷810/E-EV BLU	1200÷6200	Electronic cam	•	•
Dual Block Low NOx combustion	DB 4÷6 SM BLU	2500÷6100	Mechanical cam	•	
	DB 4÷6 SE-SEV BLU	2500÷6100	Electronic cam	•	•

(1) Please see details about the various burners models in the following pages
(2) For eventual needs of higher power output, please contact RIELLO's Commercial and Technical Department, our Application Engineers will be pleased to help you
(3) Specific burners models are also suitable for combustion of Biogas and Liquid fuel (typically gasoil, biodiesel or blends) please contact RIELLO's Commercial and Technical Department, our Application Engineers will be pleased to help you

FOR REQUESTS OF ADDITIONAL INFORMATION, DIFFERENT BURNERS CONFIGURATIONS AND BURNERS CODES, PLEASE CONTACT RIELLO BURNERS COMMERCIAL AND TECHNICAL DEPARTMENT, OUR APPLICATION ENGINEERS WILL BE PLEASED TO HELP YOU

RIELLO 40 FS 10÷20

FOR SINGLE FUEL USE

The RIELLO 40 FS series of burners for Biogas combustion, is a range of robust products developed to respond to any request for light commercial applications. The series is made up of two different models, with a firing range from 40 to 170 kW, equipped with a digital control box, with status indicator and diagnostic functions. The One stage power control of RIELLO 40 FS series, enable a simple and reliable operation, while the high-quality level guarantees safe working and reliability.
In developing these burners, special attention was paid to reducing noise, to the easiness of installation and adjustment, to obtaining a reduced size in order to fit the various boiler and applications available on the market.

MAIN FEATURES

- **Fuel:** BIOGAS or BIOMETHANE
- **Emission:** Standard
- **Firing range:** 40÷170 kW
- **Operation:** One stage

For the GAS TRAIN selection please referrer to the RIELLO's Engineers, they will be pleased to support the selection process in function of BIOGAS characteristics and available pressure.

MODEL	HEAT OUTPUT	OPERATION	ELECTRICAL SUPPLY	FUEL	
	kW		Ph/V/Hz	Biogas	Biomethane
R40 FS10	40÷90	One stage	1/230/50	•	•
R40 FS20	80÷170	One stage	3/400/50	•	•

For requests of additional information, different burners configurations and burners codes, please contact RIELLO Burners Commercial and Technical Department, our Application Engineers will be pleased to help you.

RS 34÷250/M MZ
RS 34÷250/E-EV MZ

FOR SINGLE FUEL USE

The RS 34÷250 series of burners for Biogas combustion, covers a firing range from 130 to 2100 kW, and it has been designed for use in various applications, such as hot water boilers, steam boilers, diathermic oil boilers, hot air generators.
Operation is modulating with the installation of a PID logic regulator and respective probes.
The RS 34÷250/M burners are equipped with the RIELLO RFGO digital control box, with diagnostic functions and indication of operating status.
The RS 34÷250/E-EV burners are equipped with a Digital Burner Management System, which can manage the air-fuel ratio by independent servomotors in order to obtain a perfect output control.
The RS /EV models are available to operate with the motor speed variation technology based on the control of a Frequency Inverter, in order to optimize the energy consumption.
All the models are equipped with UV flame sensor to assure a safe operation on all modulation range.

MAIN FEATURES

- **Fuel:** BIOGAS or BIOMETHANE
- **Emission:** Standard
- **Firing range:** 130÷2100 kW
- **Operation:**
  /M Modulating with Mechanical Cam
  /E Modulating with Electronic Cam
  /EV Modulating with Electronic cam predisposed for variable speed (with inverter)

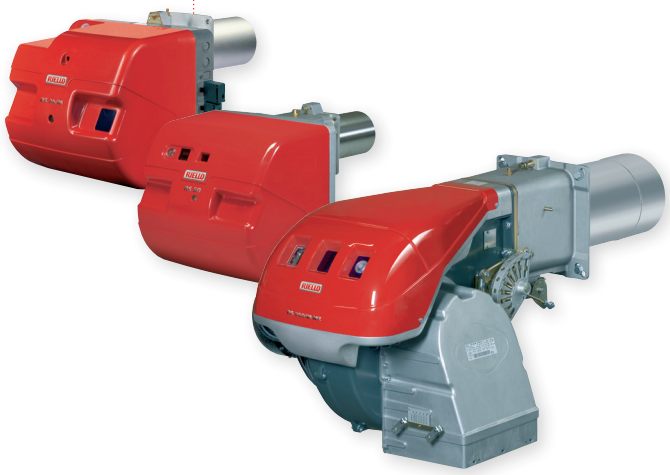

For the GAS TRAIN selection please referrer to the RIELLO's Engineers, they will be pleased to support the selection process in function of BIOGAS characteristics and available pressure.

MODEL	HEAT OUTPUT	OPERATION (1)			ELECTRICAL SUPPLY	FUEL	
	kW				Ph/V/Hz	Biogas	Biomethane
RS 34	45/125÷300	/M	/E		1/230/50	●	●
RS 44	80/203÷430	/M	/E		1/230/50 or 3/230-400/50	●	●
RS 50	80/285÷490	/M	/E		3/230-400/50	●	●
RS 64	150/400÷660	/M	/E		3/230-400/50	●	●
RS 70	150/470÷720	/M	/E		3/230-400/50	●	●
RS 100	150/700÷1040	/M	/E		3/230-400/50	●	●
RS 130	254/920÷1240	/M	/E		3/230-400/50	●	●
RS 150	300/900÷1440	/M			3/400/50	●	●
RS 190	470/1279÷1780	/M	/E	/EV	3/400/50	●	●
RS 250	600/1250÷2100	/M	/E	/EV	3/400/50	●	●

(1) **/M** Modulating Mechanical Cam | **/E** Modulating Electronic Cam | **/EV** Modulating Electronic Cam, Variable Speed Drive (VSD)

For requests of additional information, different burners configurations and burners codes, please contact RIELLO Burners Commercial and Technical Department, our Application Engineers will be pleased to help you.

RS 310÷610/M MZ
RS 310÷610/E-EV MZ

FOR SINGLE FUEL USE

The RS 310÷610 series of burners for Biogas combustion, covers a firing range from 1300 to 4900 kW, and it has been designed for use in various applications, such as hot water boilers, steam boilers, diathermic oil boilers, hot air generators.
Operation is modulating with the installation of a PID logic regulator and respective probes.
The RS 310÷610/M burners are equipped with the RIELLO RFGO digital control box, with diagnostic functions and indication of operating status.
The RS 310÷610/E-EV burners are equipped with a Digital Burner Management System, which can manage the air-fuel ratio by independent servomotors in order to obtain a perfect output control.
The RS /EV models are available to operate with the motor speed variation technology based on the control of a Frequency Inverter, in order to optimize the energy consumption.
All the models are equipped with UV flame sensor to assure a safe operation on all modulation range.

MAIN FEATURES

- **Fuel:** BIOGAS or BIOMETHANE
- **Emission:** Standard
- **Firing range:** 1300÷4900 kW
- **Operation:**
  /M Modulating with Mechanical Cam
  /E Modulating with Electronic Cam
  /EV Modulating with Electronic cam predisposed for variable speed (with inverter)

For the GAS TRAIN selection please referrer to the RIELLO's Engineers, they will be pleased to support the selection process in function of BIOGAS characteristics and available pressure.

MODEL	HEAT OUTPUT	OPERATION (1)			ELECTRICAL SUPPLY	FUEL	
	kW				Ph/V/Hz	Biogas	Biomethane
RS 310	600/1300÷3050	/M	/E	/EV	3/400/50	●	●
RS 410	800/2000÷3800	/M	/E	/EV	3/400/50	●	●
RS 510	800/2200÷4280	/M	/E	/EV	3/400/50	●	●
RS 610	820/2400÷4900	/M	/E	/EV	3/400/50	●	●

(1) **/M** Modulating Mechanical Cam | **/E** Modulating Electronic Cam | **/EV** Modulating Electronic Cam, Variable Speed Drive (VSD)

For requests of additional information, different burners configurations and burners codes, please contact RIELLO Burners Commercial and Technical Department, our Application Engineers will be pleased to help you.

RS 25÷200/M BLU
FOR SINGLE FUEL USE

RS 25÷200/E-EV BLU
FOR SINGLE FUEL OR DUAL FUEL USE

The RS 25÷200 series of burners, covers a firing range from 125 to 1900 kW, and it has been designed for use in various applications, such as hot water boilers, steam boilers, diathermic oil boilers, hot air generators.
They are designed for combustion of Biogas only and of Biogas and an alternative fuel; combustion of the two fuels is alternately and not contemporary and the fuel change need the burner re-start. The Low NOx combustion head allow to comply the emission requirement of operating standard with both fuels Biogas and Methane natural gas. Operation is modulating with the installation of a PID logic regulator and respective probes.
The RS 25÷200/E-EV burners are equipped with a Digital Burner Management System, which can manage the air-fuel ratio by independent servomotors, based on a specific adjustment curve per each fuel, and allows both, local and remote gas selection. The RS /EV models are available to operate with the motor speed variation technology based on the control of a Frequency Inverter, in order to optimize the energy consumption.
All the models are equipped with UV flame sensor and the burners for dual fuel are also equipped with a double max pressure switch (based on power output) to assure a safe operation on all modulation range.

MAIN FEATURES

- **Fuel:** BIOGAS or BIOMETHANE or METHANE or COMBINATION OF TWO OF THEM
- **Emission:** Low NOx
- **Firing range:** 125÷1900 kW
- **Operation:**
  /M Modulating with Mechanical Cam
  /E Modulating with Electronic Cam
  /EV Modulating with Electronic cam predisposed for variable speed (with inverter)

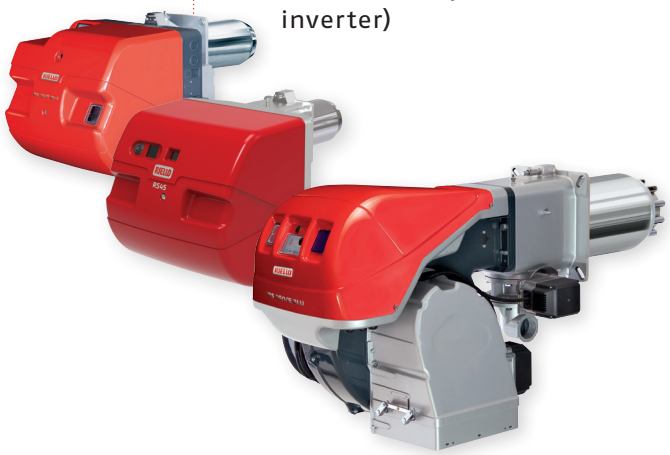

For the GAS TRAIN selection please referrer to the RIELLO's Engineers, they will be pleased to support the selection process in function of BIOGAS characteristics and available pressure.

MODEL	HEAT OUTPUT	OPERATION (1)			ELECTRICAL SUPPLY	FUEL		
	kW				Ph/V/Hz	Biogas	Biomethane	Methane
RS 25	45/125÷290	/M	/E	/EV	1/230/50	●	●	●
RS 35	72/202÷370	/M	/E	/EV	1/230/50	●	●	●
RS 45	90/190÷430	/M	/E	/EV	1/230/50	●	●	●
RS 55	100/300÷530	/M	/E	/EV	3/230-400/50	●	●	●
RS 68	150/350÷670	/M	/E	/EV	3/230-400/50	●	●	●
RS 120	300/600÷1000	/M	/E	/EV	3/230-400/50	●	●	●
RS 160	300/930÷1450	/M	/E	/EV	3/400/50	●	●	●
RS 200	570/1375÷1860	/M	/E	/EV	3/400/50	●	●	●

(1) **/M** Modulating Mechanical Cam | **/E** Modulating Electronic Cam | **/EV** Modulating Electronic Cam, Variable Speed Drive (VSD)

For requests of additional information, different burners configurations and burners codes, please contact RIELLO Burners Commercial and Technical Department, our Application Engineers will be pleased to help you.

RS 310÷810/M BLU

FOR SINGLE FUEL USE

RS 310÷810/E-EV BLU

FOR SINGLE FUEL OR DUAL FUEL USE

The RS 310÷810 series of burners, covers a firing range from 1200 to 6200 kW, and it has been designed for use in various applications, such as hot water boilers, steam boilers, diathermic oil boilers, hot air generators.
They are designed for combustion of Biogas only and of Biogas and an alternative fuel; combustion of the two fuels is alternately and not contemporary and the fuel change need the burner re-start.
The Low NOx combustion head allow to comply the emission requirement of operating standard with both fuels Biogas and Methane natural gas.
Operation is modulating with the installation of a PID logic regulator and respective probes.
The RS 310÷810/E-EV burners are equipped with a Digital Burner Management System, which can manage the air-fuel ratio by independent servomotors, based on a specific adjustment curve per each fuel, and allows both, local and remote gas selection.
The RS /EV models are available to operate with the motor speed variation technology based on the control of a Frequency Inverter, in order to optimize the energy consumption.
All the models are equipped with UV flame sensor and the burners for dual fuel are also equipped with a double max pressure switch (based on power output) to assure a safe operation on all modulation range.

MAIN FEATURES

- **Fuel:** BIOGAS or BIOMETHANE or METHANE or COMBINATION OF TWO OF THEM
- **Emission:** Low NOx
- **Firing range:** 1200÷6200 kW
- **Operation:**
  /M Modulating with Mechanical Cam
  /E Modulating with Electronic Cam
  /EV Modulating with Electronic cam predisposed for variable speed (with inverter)

For the GAS TRAIN selection please referrer to the RIELLO's Engineers, they will be pleased to support the selection process in function of BIOGAS characteristics and available pressure.

MODEL	HEAT OUTPUT	OPERATION (1)			ELECTRICAL SUPPLY	FUEL		
	kW				Ph/V/Hz	Biogas	Biomethane	Methane
RS 310	400/1200 ÷2800	/M	/E	/EV	3/400/50	●	●	●
RS 410	500/1500 ÷3450	/M	/E	/EV	3/400/50	●	●	●
RS 510	680/1800 ÷4070	/M	/E	/EV	3/400/50	●	●	●
RS 610	1000/2200 ÷4850	/M	/E	/EV	3/400/50	●	●	●
RS 810	1200/3500 ÷6200	/M	/E	/EV	3/400/50	●	●	●

(1) **/M** Modulating Mechanical Cam | **/E** Modulating Electronic Cam | **/EV** Modulating Electronic Cam, Variable Speed Drive (VSD)

For requests of additional information, different burners configurations and burners codes, please contact RIELLO Burners Commercial and Technical Department, our Application Engineers will be pleased to help you.

DB 4÷6 SM BLU

FOR SINGLE FUEL USE

DB 4÷6 SE-SEV BLU

FOR SINGLE FUEL OR DUAL FUEL USE

The DB 4÷6 series of Dual-block burners, covers a firing range from 1000 to 6100 kW, and it has been designed for use in various applications, such as hot water boilers, steam boilers, diathermic oil boilers, hot air generators.
They are designed for combustion of Biogas only and of Biogas and an alternative fuel; combustion of the two fuels is alternately and not contemporary and the fuel change need the burner re-start.
The Low NOx combustion head allow to comply the emission requirement of operating standard with both fuels Biogas and Methane natural gas.
Operation is modulating with the installation of a PID logic regulator and respective probes.
The DB 4÷6 SE-SEV burners are equipped with a Digital Burner Management System, which can manage the air-fuel ratio by independent servomotors, based on a specific adjustment curve per each fuel, and allows both, local and remote gas selection.
The RS /EV models are available to operate with the motor speed variation technology based on the control of a Frequency Inverter, in order to optimize the energy consumption.
All the models are equipped with UV flame sensor and the burners for dual fuel are also equipped with a double max pressure switch (based on power output) to assure a safe operation on all modulation range.

MAIN FEATURES

- **Fuel:** BIOGAS or BIOMETHANE or METHANE or COMBINATION OF TWO OF THEM
- **Emission:** Low NOx
- **Firing range:** 1000÷6100 kW
- **Operation:**
  /M Modulating with Mechanical Cam
  /E Modulating with Electronic Cam
  /EV Modulating with Electronic cam predisposed for variable speed (with inverter)

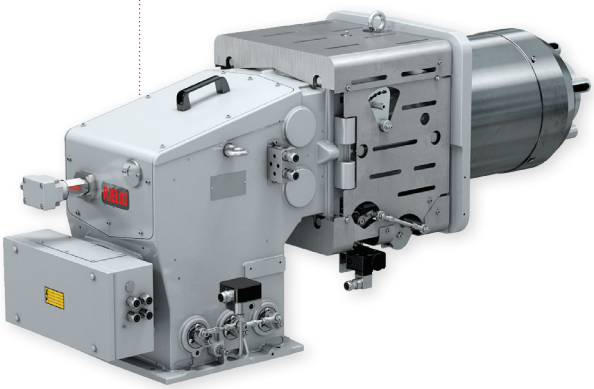

For the GAS TRAIN selection please referrer to the RIELLO's Engineers, they will be pleased to support the selection process in function of BIOGAS characteristics and available pressure.

MODEL	HEAT OUTPUT	OPERATION (1)			ELECTRICAL SUPPLY	FUEL		
	kW				Ph/V/Hz	Biogas	Biomethane	Methane
DB 4	1000/2500÷3900	/M	/E	/EV	1/230/50	●	●	●
DB 6	1400/4000÷6100	/M	/E	/EV	3/400/50	●	●	●

(1) **/M** Modulating Mechanical Cam | **/E** Modulating Electronic Cam | **/EV** Modulating Electronic Cam, Variable Speed Drive (VSD)

For requests of additional information, different burners configurations and burners codes, please contact RIELLO Burners Commercial and Technical Department, our Application Engineers will be pleased to help you.

BIOGAS BURNERS
GENERAL REQUIREMENTS

THE BIOCHEMICAL CHARACTERISTICS OF BIOGAS CAN HAVE A HIGH VARIABILITY, DEPENDING ON VARIOUS REASONS RELATED TO HIS PRODUCTION; BASED ON THAT, RIELLO CAN PROVIDE DIFFERENT SOLUTIONS FOR DIFFERENT NEEDS.

In order to support our customers and with the aim of providing a quick response to various needs of information, here below is shown a quick guide to the basic characteristics that can allow the access of a standard solution for Biogas combustion.

For the GAS TRAIN selection please referrer to the RIELLO's Engineers, they will be pleased to support the selection process in function of BIOGAS characteristics and available pressure.

COMPOSITION	VALUE	NOTE
Fuel	Dry dehydrated biogas	
Methane content (CH_4)	65% minimum	**Please referrer to the RIELLO's Application Engineers for combustion of Biogas with Methane content (CH4) lower than 65% (i.e. 50%-55%); the feasibility is highly dependent from the particularity of the application and must be properly assessed.**
Carbon Dioxide content (CO2)	35% maximum	
Hydrogen Sulfide content (H2S)	< 0,1%	Maximum percentage content in dry volume. A H2S content higher than 0,1% requires the use of special gas valves.
Relative humidity	< 60%	
Dew point	< -10°C	
PCI	6.46 kWh/Nm³	It is acceptable a difference in the chemical composition as to lead to a variability of maximum 5% of the calorific value.

IF THE OPERATING CONDITIONS ARE DIFFERENT FROM THE ABOVE, PLEASE ASK FOR A SUPPORT, AS VARIATIONS OF THE BIOGAS CHARACTERISTICS COULD AFFECT THE BURNER SIZING AND RELATED ACCESSORIES.

BIOGAS BURNERS
PRE-SALES AND APPLICATION ENGINEERING

SINCE BIOGAS IS BECOMING A MORE AND MORE POPULAR FUEL, RIELLO WANTS TO SUPPORT HIS CUSTOMERS IN THE PRODUCT SELECTION PROCESS, IN ORDER TO ASSURE THE HIGHER LEVEL OF SATISFACTION.

In the Application Engineering department, a dedicated team works in cooperation with the sales network to perform application matching and burners integration, optimizing performance to help our Customers achieving the competitive advantage they need.
We can offer a great support in terms of burner application consulting, analysis for product re-engineering, job development, integrated system proposals and assistance for international standards compliance.
When needed, Training, Start-up, Commissioning and After-sale assistance are also performed by headquarter expert engineers.

For additional information, please contact RIELLO Burners Commercial and Technical Department, our Application Engineers will be pleased to help you.

REVAMPING OF EXISTING INSTALLATIONS

In some cases, there is a need to convert an existing combustion plant, already equipped with RIELLO burners, to Biogas combustion.
With the support of RIELLO's Engineers, it is possible to make a feasibility analysis, in order to identify the possible solutions having an estimation of costs breakdown.

BIOGAS DUAL FUEL BURNERS

Specific burners models are also suitable for combustion of Biogas and Liquid fuel (typically gasoil, biodiesel or blends) please see the table below for the available range and estimated power output and contact RIELLO's Application Engineers to help you in the selection of the right products and for the customization of the standard burners.

BURNERS RANGE		POWER OUTPUT KW	OPERATION	DUAL FUEL BIOGAS/LIQUID FUEL
Monoblock Standard combustion	RLS 28÷250/M	125÷2000	Mechanical cam	•
	RLS 70÷130/E	465÷1150	Electronic cam	•
Monoblock Low NOx combustion	RLS 68÷160/M MX	350÷1500	Mechanical cam	•
	RLS 68÷160/E MX	350÷1500	Electronic cam	•
	RLS 310÷610/M MX	1200÷4900	Mechanical cam	•
	RLS 310÷610/E MX	1200÷4900	Electronic cam	•
Dual Block Low NOx combustion	DB 4÷6 LSM C13	2500÷6100	Mechanical cam	•
	DB 4÷6 LSE C13	2500÷6100	Electronic cam	•

REQUEST FOR INFORMATION

Customer ..... **Ref.** ..... **Riello project ref.** .....

Boiler model: ..... **Manufacturer:** ..... **Year:** .....

☐ Hot water ☐ Superheated water ☐ Thermal oil ☐ Hot air-Indirect generator
☐ High pressure steam ☐ Low pressure steam ☐ Superheated steam ☐ Hot air-direct generator

Max working press. ☐ bar Max working temp. ☐ °C Steam ☐ kg/h

Boiler Design

Firetube ☐ 3-pass ☐ Reverse flame ☐ Twin Chamber/Twin Burner ☐ Single Chamber/Twin Burner
Watertube ☐ D-shape ☐ Heat recovery ☐ Rapid ☐ Vertical

Preheating comburent air ☐ Yes ☐ No

Comburent Air Temp. ☐ °C
Boiler Efficiency ☐ %

Boiler output	☐ kW	☐ kcal/h	☐ btu/h
Burner ouput	☐ kW	☐ kcal/h	☐ btu/h

Combustion Chamber Data

Back pressure ☐ mbar ☐ mm W.C. ☐ mm Hg

Length	☐ mm	High	☐ mm	Refractory Hole Diameter	☐ mm
Diameter	☐ mm	Width	☐ mm	Refractory Hole Lenght	☐ mm

Fuel

☐ Natural gas ☐ LPG ☐ Town gas ☐ Biogas ☐ .....
☐ Light oil ☐ Heavy oil ☐ Kerosene ☐ Biodiesel ☐ .....

Biogas composition

Dry dehydrated biogas	☐ YES	☐ NO
Methane content (CH_4)	☐ %	
Carbon Dioxide content (CO_2)	☐ %	
Hydrogen Sulfide content (H_2S)	☐ %	
Relative humidity	☐ %	
Dew point	☐ °C	
PCI	☐ kWh/Nm³	

Gas Supply

Lower calorific value	☐ kWh/Nmc	☐ kcal/Nmc	☐ Btu/ft3
Gas supply pressure	☐ mbar	☐ mm W.C.	☐ PSI

Oil Supply

Min Viscosity	☐ cSt	☐ °E	☐ °C
Max Viscosity	☐ cSt	☐ °E	☐ °C
Lower Calorific Value	☐ kWh/kg	☐ kcal/kg	☐ Btu/lb
Temperature	☐ °C		☐
Pressure	☐ bar		

Burner Site Installation

Country ..... Town ..... ☐ Indoor
Altitude ☐ m a.s.l. Environment Temp. ☐ °C ☐ Outdoor

Electrical Power supply

Main 3- phase	☐ V	☐ Hz
Aux 1- phase	☐ V	☐ Hz

Burner Control Options

☐ Single-block ☐ Dual-block ☐ One stage ☐ Two stage ☐ Modulating
☐ Mechanical cam ☐ Electronic cam-Siemens ☐ Electronic cam-Lamtec ☐ FGR
☐ O2 control ☐ CO control ☐ Inverter

Flame Control Options

☐ Standard flame safeguard (FS1) ☐ Self-Check flame safeguard (FS2)

Oil pumping skid for dual-block

☐ Single pump ☐ Double pump ☐ Single filter ☐ Double filter
☐ Electrical Oil Preheater ☐ Steam Oil Preheater ☐ Steam + Electrical Oil Preheater

Gas train

☐ Regulating gas train ☐ Safety gas train ☐ Leakage control ☐ Filter

Approval/Compliance

☐ European Standards EN267/EN676 ☐ ATEX
☐ North American Standards UL296/UL795 ☐ .....

Max NOx emission value

☐ ppm ☐ mg/kWh ☐ mg/Nm³ @ ☐ % O_2

Other requirements

Date ..... **Signature** .....

RIELLO
ENERGY FOR A HEALTHY LIFE

LOW EMISSIONS AND EFFICIENT USE OF RESOURCES

RIELLO provides safe, sustainable, and smart solutions for the residential and light commercial sectors and develops high-performance, efficient and low-emission technologies for industries.
It innovates, facing the challenges of the present and sensing those of the future, with an attentive eye to its surroundings, transforming the energy sources into comfort.
It is sustainability that guides RIELLO in the way it operates, designs, and builds state-of-the-art systems. The objective is to improve the quality of life, making the planet a better place to live today and for future generations. RIELLO stands for efficient use of resources and careful product design. This philosophy is reflected in the RIELLO 4 Green program. It embraces the concept of well-being with a 360° approach, translating it into good business practices and into the offer of a wide range of systems and technologies that integrate different energies efficiently, reducing consumption and leveraging the potentialities of IoT.

100 YEARS EXPERIENCE IN COMBUSTION TECHNOLOGY

Each RIELLO burner is the result of a long experience in design and manufacture, coupled with leading technology and flexible burner design. RIELLO has always believed and invested in the search for new materials and in the development of more advanced combustion technology. The RS SERIES for BIOGAS combustion, is part of the new generation of products developed for the efficient use of different energies resources.

OUR PRESENCE

RIELLO, World Leader in the production of gas, oil, dual fuel and Low Nox burners (with capacity from 5 kW to 48 MW) deliver unbeatable performance across the full range of residential and commercial heating applications, as well as in industrial processes.
The RIELLO Combustion Research Centre, represents one of the most modern facilities in Europe and one of the most advanced in the world for the development of the combustion technology.
Today, the company's presence on worldwide markets is distinguished by a well-structured and efficient sales network, alongside many important Training Centres located in various countries to meet its customers' needs.

With headquarter in Legnago (Northern Italy), RIELLO has been manufacturing premium quality burners for 100 years. The manufacturing plant is equipped with the most innovative systems of assembling lines and modern manufacturing cells for a quick and flexible response to the market.

RIELLO

RIELLO S.p.A.
37045 Legnago (VR)
tel. +39 0442 630111
fax +39 0442 630371
www.riello.com

Since the Company is constantly engaged in the production improvement, the aesthetic and dimensional features, the technical data, the equipment and the accessories can be changed.

Code P00046EN00 09/2022