GB

Dual fuel light oil/ gas burners

Progressive two-stage or modulating operation gas side/
two-stage light oil side

CODE	MODEL	TYPE
20147784	RLS 68/M MX FS1	779T
20147785	RLS 68/M MX FS1	779T
20147786	RLS 120/M MX FS1	780T
20147788	RLS 120/M MX FS1	780T

20148266 (5) - 03/2022

Translation of the original instructions

1 Declarations ... 3

2 Information and general warnings ... 5
2.1 Information about the instruction manual ... 5
2.2 Guarantee and responsibility ... 6

3 Safety and prevention ... 7
3.1 Introduction ... 7
3.2 Personnel training ... 7

4 Technical description of the burner ... 8
4.1 Burner designation ... 8
4.2 Models available ... 8
4.3 Burner categories - Countries of destination ... 9
4.4 Technical data ... 9
4.5 Electrical data ... 9
4.6 Packaging - Weight ... 10
4.7 Maximum dimensions ... 10
4.8 Firing rate ... 11
4.9 Test boiler ... 11
4.10 Commercial boilers ... 12
4.11 Burner equipment ... 12
4.12 Burner description ... 13
4.13 Electrical panel description ... 14
4.14 Control box RFGO-A22 ... 15
4.15 Servomotor (SQN31...) ... 16
4.16 Calibration of the thermal relay ... 17
4.17 Motor rotation ... 17

5 Installation ... 18
5.1 Notes on safety for the installation ... 18
5.2 Handling ... 18
5.3 Preliminary checks ... 18
5.4 Operating position ... 19
5.5 Preparing the boiler ... 19
5.6 Securing the burner to the boiler ... 20
5.7 Electrode position ... 20
5.8 Choice of nozzles for the 1st and 2nd stage ... 21
5.9 Nozzle installation ... 22
5.10 Combustion head adjustment ... 23
5.11 Light oil supply ... 24
5.12 Gas supply ... 27
5.13 Electrical connections ... 30

6 Start-up, calibration and operation of the burner ... 31
6.1 Notes on safety for the first start-up ... 31
6.2 Servomotor adjustment ... 31
6.3 Adjustments prior to ignition (light oil) ... 31
6.4 Burner start-up (light oil) ... 32
6.5 Burner ignition (light oil) ... 32
6.6 Burner adjustment (light oil) ... 32
6.7 Adjustments prior to ignition (gas) ... 33
6.8 Burner start-up (gas) ... 33

6.9 Burner ignition (gas) ... 33
6.10 Burner adjustment (gas) ... 34
6.11 Change of fuel ... 35
6.12 Pressure switch adjustment ... 36
6.13 Operation sequence of the burner (gas) ... 37
6.14 Final checks (with burner operating) ... 38

7 Maintenance ... 39
7.1 Notes on safety for the maintenance ... 39
7.2 Maintenance programme ... 39
7.3 Opening the burner ... 42
7.4 Closing the burner ... 42

8 LED indicator and special function ... 43
8.1 Description of LED lamps ... 43
8.2 Check mode function ... 43
8.3 Flame control lock-out or emergency stop condition ... 43
8.4 LED lamps: burner operating status ... 44

9 Problems - Causes - Remedies signalled by LED indicators ... 45

A Appendix - Accessories ... 50

B Appendix - Electrical panel layout ... 51

1 Declarations

Declaration of Conformity in accordance with ISO / IEC 17050-1		
Manufacturer:	RIELLO S.p.A.	
Address:	Via Pilade Riello, 7 37045 Legnago (VR) Italy	
Product:	Dual fuel Light Oil/Gas Burner	
Model:	RLS 68/M MX - RLS 120/M MX	
These products are in compliance with the following Technical Standards:		
EN 676		
EN 267		
EN 12100		
and according to the European Directives:		
GAR	2016/426/EU	Gas Devices Regulation
MD	2006/42/CE	Machine Directive
LVD	2014/35/EU	Low Voltage Directive
EMC	2014/30/EU	Electromagnetic Compatibility
Such products are marked as indicated below:		
CE	CE 0085 BP 0175	

The quality is guaranteed by a quality and management system certified in accordance with ISO 9001:2015.

Manufacturer's Declaration

RIELLO S.p.A. declares that the following products comply with the NOx emission limits specified by German standard "**1. BImSchV revision 26.01.2010**".

Product	Type	Model	Output
Dual fuel Light Oil/Gas Burner	779T	RLS 68/M MX	200 - 860 kW
	780T	RLS 120/M MX	300 - 1200 kW

Legnago, 03.05.2021

Research & Development Director
RIELLO S.p.A. - Burner Department
Mr. F. Maltempi

Declaration of Conformity A.R. 8/1/2004 & 17/7/2009 – Belgium			
Manufacturer:	RIELLO S.p.A. 37045 Legnago (VR) Italy Tel. ++39.0442630111 www.riello.com		
Distributed by:	RIELLO NV VAN MARCKE HQ LAR Blok Z 5, B-8511 Kortrijk (Aalbeke) Belgio Tel. +32 56 23 7511 e-mail: riello@vanmarcke.be URL. www.vanmarcke.com		
This document certifies that the series of devices specified below is in compliance with the model described in the EC Declaration of Conformity and has been manufactured and distributed in compliance with the requirements defined in the Legislative Decree of January 8th 2004 and July 17th 2009.			
Type of product:	Dual fuel Light Oil/Gas Burner		
Model:	RLS 68/M MX - RLS 120/M MX		
Regulation applied:	EN 267/676 and A.R. of January 8th 2004 - July 17th 2009		
Controlling organisation:	TÜV Industrie Service GmbH TÜV SÜD Gruppe Ridlerstrase, 65 80339 München DEUTSCHLAND		
Values measured:		OIL	GAS
	RLS 68/M MX	CO max: 12 mg/kWh Max. NOx: 110 mg/kWh	CO max: 8 mg/kWh NOx max: 70 mg/kWh
	RLS 120/M MX	CO max: 6 mg/kWh Max. NOx: 130 mg/kWh	CO max: 7 mg/kWh NOx max: 64 mg/kWh

2 Information and general warnings

2.1 Information about the instruction manual

2.1.1 Introduction

The instruction manual supplied with the burner:

- ➤ is an integral and essential part of the product and must not be separated from it; it must therefore be kept carefully for any necessary consultation and must accompany the burner even if it is transferred to another owner or user, or to another system. If the manual is lost or damaged, another copy must be requested from the Technical Assistance Centre of the area;
- ➤ is designed for use by qualified personnel;
- ➤ offers important indications and instructions relating to the installation safety, start-up, use and maintenance of the burner.

Symbols used in the manual

In some parts of the manual you will see triangular DANGER signs. Pay great attention to these, as they indicate a situation of potential danger.

2.1.2 General dangers

The **dangers** can be of **3 levels**, as indicated below.

DANGER

Maximum danger level!
This symbol indicates operations which, if not carried out correctly, cause serious injury, death or long-term health risks.

ATTENTION

This symbol indicates operations which, if not carried out correctly, may cause serious injury, death or long-term health risks.

CAUTION

This symbol indicates operations which, if not carried out correctly, may cause damage to the machine and/or injury to people.

2.1.3 Other symbols

DANGER

DANGER: LIVE COMPONENTS

This symbol indicates operations which, if not carried out correctly, lead to electric shocks with lethal consequences.

DANGER: FLAMMABLE MATERIAL

This symbol indicates the presence of flammable materials.

DANGER: BURNING

This symbol indicates the risks of burns due to high temperatures.

DANGER: CRUSHING OF LIMBS

This symbol indicates the presence of moving parts: danger of crushing of limbs.

WARNING: MOVING PARTS

This symbol indicates that you must keep limbs away from moving mechanical parts; danger of crushing.

DANGER: EXPLOSION

This symbol signals places where an explosive atmosphere may be present. An explosive atmosphere is defined as a mixture - under atmospheric conditions - of air and flammable substances in the form of gases, vapours, mist or dust in which, after ignition has occurred, combustion spreads to the entire unburned mixture.

PERSONAL PROTECTION EQUIPMENT

These symbols indicate the equipment that must be worn and kept by the operator for protection against threats against safety and/or health while at work.

OBLIGATION TO ASSEMBLE THE COVER AND ALL THE SAFETY AND PROTECTION DEVICES

This symbol signals the obligation to reassemble the cover and all the safety and protection devices of the burner after any maintenance, cleaning or checking operations.

ENVIRONMENTAL PROTECTION

This symbol gives indications for the use of the machine with respect for the environment.

IMPORTANT INFORMATION

This symbol indicates important information that you must bear in mind.

➤ This symbol indicates a list.

Abbreviations used

Ch.	Chapter
Fig.	Figure
Page	Page
Sec.	Section
Tab.	Table

2.1.4 Delivery of the system and the instruction manual

When the system is delivered, it is important that:

➤ the instruction manual is delivered to the user by the system manufacturer, with the recommendation to keep it in the room where the heat generator is to be installed.

➤ The instruction manual shows:
- the serial number of the burner;

  .....

- the address and telephone number of the nearest Assistance Centre;

  .....
  .....
  .....

➤ The system supplier must carefully inform the user about:
- the use of the system;
- any further tests that may be required before activating the system;
- maintenance, and the need to have the system checked at least once a year by a representative of the manufacturer or another specialised technician.
  To ensure a periodic check, the manufacturer recommends the drawing up of a Maintenance Contract.

2.2 Guarantee and responsibility

The manufacturer guarantees its new products from the date of installation, in accordance with the regulations in force and/or the sales contract. At the moment of the first start-up, check that the burner is integral and complete.

ATTENTION

Failure to observe the information given in this manual, operating negligence, incorrect installation and carrying out of non authorised modifications will result in the annulment by the manufacturer of the guarantee that it supplies with the burner.

In particular, the rights to the guarantee and the responsibility will no longer be valid, in the event of damage to things or injury to people, if such damage/injury was due to any of the following causes:

➤ incorrect installation, start-up, use and maintenance of the burner;
➤ improper, incorrect or unreasonable use of the burner;
➤ intervention of unqualified personnel;
➤ carrying out of unauthorised modifications on the equipment;
➤ use of the burner with safety devices that are faulty, incorrectly applied and/or not working;
➤ installation of untested supplementary components on the burner;
➤ powering of the burner with unsuitable fuels;
➤ faults in the fuel supply system;
➤ continuation of use of the burner when a fault has occurred;
➤ repairs and/or overhauls incorrectly carried out;
➤ modification of the combustion chamber with inserts that prevent the regular development of the structurally established flame;
➤ insufficient and inappropriate surveillance and care of those burner components most likely to be subject to wear and tear;
➤ use of non-original components, including spare parts, kits, accessories and optional;
➤ force majeure.

The manufacturer furthermore declines any and every responsibility for the failure to observe the contents of this manual.

3 Safety and prevention

3.1 Introduction

The burners have been designed and built in compliance with current regulations and directives, applying the known technical safety rules and envisaging all the potential danger situations.

It is necessary, however, to bear in mind that the imprudent and clumsy use of the equipment may lead to situations of death risk for the user or third parties, as well as the damaging of the burner or other items. Inattention, thoughtlessness and excessive confidence often cause accidents; the same applies to tiredness and sleepiness.

It is a good idea to remember the following:

➤ The burner must only be used as expressly described. Any other use should be considered improper and therefore dangerous.

Specifically:

it can be applied to boilers operating with water, steam, diathermic oil, and to other uses expressly named by the manufacturer;

the type and pressure of the fuel, the voltage and frequency of the electrical power supply, the minimum and maximum deliveries for which the burner has been regulated, the pressurisation of the combustion chamber, the dimensions of the combustion chamber and the ambient temperature must all be within the values indicated in the instruction manual.

➤ Modification of the burner to alter its performance and destinations is not allowed.

➤ The burner must be used in exemplary technical safety conditions. Any disturbances that could compromise safety must be quickly eliminated.

➤ Opening or tampering with the burner components is not allowed, apart from the parts requiring maintenance.

➤ Only those parts envisaged by the manufacturer can be replaced.

The manufacturer guarantees safety and proper operation only if all burner components are intact and correctly positioned.

3.2 Personnel training

The user is the person, body or company that has acquired the machine and intends to use it for the specific purpose. He is responsible for the machine and for the training of the people working around it.

The user:

➤ undertakes to entrust the machine exclusively to suitably trained and qualified personnel;

➤ undertakes to inform his personnel in a suitable way about the application and observance of the safety instructions. With that aim, the user undertakes to ensure that everyone knows the use and safety instructions for his own duties;

➤ Personnel must observe all the danger and caution indications shown on the machine.

➤ Personnel must not carry out, on their own initiative, operations or interventions that are not within their province.

➤ Personnel must inform their superiors of every problem or dangerous situation that may arise.

➤ The assembly of parts of other makes, or any modifications, can alter the characteristics of the machine and hence compromise operating safety. The manufacturer therefore declines any and every responsibility for any damage that may be caused by the use of non-original parts.

In addition:

➤ must take all the measures necessary to prevent unauthorised people gaining access to the machine;

➤ the user must inform the manufacturer if faults or malfunctioning of the accident prevention systems are noticed, along with any presumed danger situation;

➤ personnel must always use the personal protective equipment envisaged by legislation and follow the indications given in this manual.

4 Technical description of the burner

4.1 Burner designation

Series: R

Fuel:

S	Natural gas
L	Light oil
LS	Light oil / Methane
N	Heavy oil

Size

Adjustment:

BP	Two stage (light oil) / Proportional valve (gas)
E	Electronic cam
EV	Electronic cam and variable speed (with Inverter)
P	Proportional air/gas valve
M	Mechanical cam

Emission:

...	Class 1 EN267 - EN676
MY	Class 1 EN267 - Class 3 EN676
BLU	Class 3 EN267 - EN676
MX	Class 2 EN267 Class 3 EN676

Head:

TC	Standard head
TL	Extended head

Flame control system:

FS1	Standard (1 stop every 24 h)
FS2	Continuous operation only with the use of a flame detection electrode (ionisation)

Electrical supply of the system:

3/400/50	3N / 400V / 50Hz
3/230/50	3 / 230V / 50Hz

Voltage of auxiliaries:

230/50/60	230V / 50-60Hz
110/50/60	110V / 50-60Hz

R	LS	68	M	MX	TC	FS1	3/400/50	230/50

BASIC DESIGNATION

EXTENDED DESIGNATION

4.2 Models available

Designation	Voltage	Start-up	Code
RLS 68/M MX	3/400/50	Direct	20147784 - 20147785
RLS 120/M MX	3/400/50	Direct	20147786 - 20147788

Tab. A

4.3 Burner categories - Countries of destination

Country of destination	Gas category
SE - FI - AT - GR - DK - ES - GB - IT - IE - PT - IS - CH - NO	I_{2H}
DE	I_{2ELL}
NL	I_{2L} - I_{2E} - I_2 (43.46 ÷ 45.3 MJ/m^3 (0°C))
FR	I_{2Er}
BE	$I_{2E(R)B}$
LU - PL	I_{2E}

Tab. B

4.4 Technical data

Model			RLS 68/M MX	RLS 120/M MX
Output (1) Delivery (1)	2nd stage min - max	kW kg/h	350 - 860 30 - 73	600 - 1200 50 - 101
	1st stage min	kW kg/h	200 17	300 25
Fuels			Light oil, max. viscosity at 20 °C: 6 mm^2/s (1.5 °E - 6 cSt) Natural gas: G20 (methane gas) - G21 - G22 - G23 - G25	
Operation			– Intermittent FS1(min. 1 stop in 24 hours) /Continuous FS2 – Oil: two-stage (high and low flame) and one-stage (all - nothing) – Gas: progressive two-stage or modulating by kit (see ACCESSORIES)	
Nozzles		number	2	
Standard applications			Boilers: water, steam, diathermic oil	
Ambient temperature		°C	0 - 40	
Combustion air temperature		°C max	60	
Pump	output (at 20 bar) pressure range fuel temperature	kg/h bar °C max	220 10 - 20 60	
Noise levels (2)	Sound pressure Sound power	dB(A)	76 87	79 90
Weight		kg	70	76

Tab. C

(1) Reference conditions: Ambient temperature 20°C - Gas temperature 15°C - Barometric pressure 1013 mbar - Altitude 0 m a.s.l.
(2) Pressure at test point 5)(Fig. 6) with zero pressure in combustion chamber and at maximum burner output.
(3) Sound pressure measured in manufacturer's combustion laboratory, with burner operating on test boiler and at maximum output. The sound power is measured using the "Free Field" method, required by EN 15036 standard, and according to an “Accuracy: Category 3” measurement, as described in EN ISO 3746.

4.5 Electrical data

Model		RLS 68/M MX	RLS 120/M MX
Main electrical supply		3 ~ 230-400V - 50Hz +/-10%	
Auxiliary circuit electrical supply		1N ~ 230V - 50Hz	
Fan motor IE3	rpm V W A	2890 220-240/380-415 1500 5.9 / 3.4	2890 220-240/380-415 2200 8 / 4.6
Pump motor IE3	V W A µF	230 550 3.6 25	
Ignition transformer	V1 - V2 I1 - I2	230 V - 2 x 5 kV 1.9 A - 30 mA	
Max. absorbed electric power	W	2900	3700
Protection level		IP 44	

Tab. D

4.6 Packaging - Weight

Package dimensions and weight are indicated in Tab. E.

Model	A	B	C	Kg
RLS 68/M MX	1400	645	975	115
RLS 120/M MX	1400	645	975	120

Tab. E

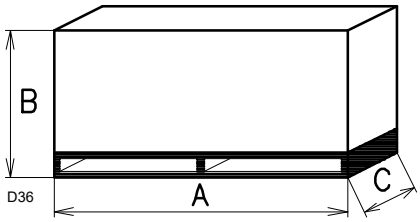

Fig. 1

4.7 Maximum dimensions

The dimensions of the burner are given in Fig. 2.

Bear in mind that inspection of the combustion head requires the burner to be opened and the rear part turned on the hinge.

The maximum dimensions of the open burner are indicated by the L and R positions.

The l position is reference for the refractory thickness of the boiler door.

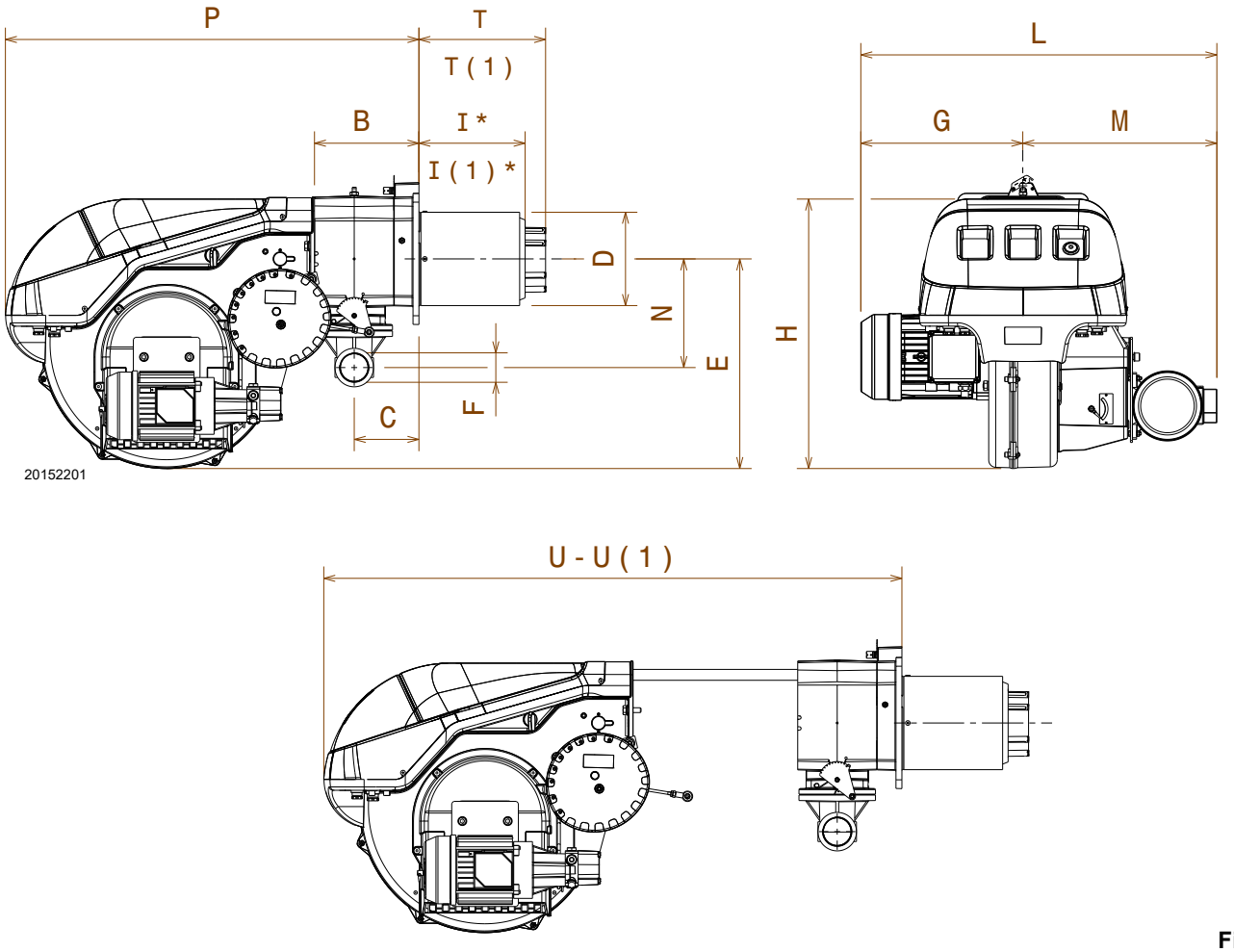

Fig. 2

mm	B	C	D	E	F	G	H	I* - I (1)	L	M	N	P	T - T (1)	U - U (1)
RLS 68/M MX	214	134	189	430	2”	296	555	200-335	691	395	221	840	260-395	1161-1300
RLS 120/M MX	214	134	189	430	2”	338	555	200-335	733	395	221	840	260-395	1161-1300

Tab. F

(*) Blast tube: short-long

4.8 Firing rate

During operation, burner output varies between:

➤ **Maximum output**

➤ The **minimum output** must not be lower than the minimum limit of the diagram

RLS 68/M MX = 200 kW

RLS 120/M MX = 300 kW

ATTENTION

The firing rate value (Fig. 3) has been obtained considering an ambient temperature of 20 °C, an atmospheric pressure of 1013 mbar (approx. 0 m a.s.l.), and with the combustion head adjusted as shown on page 23.

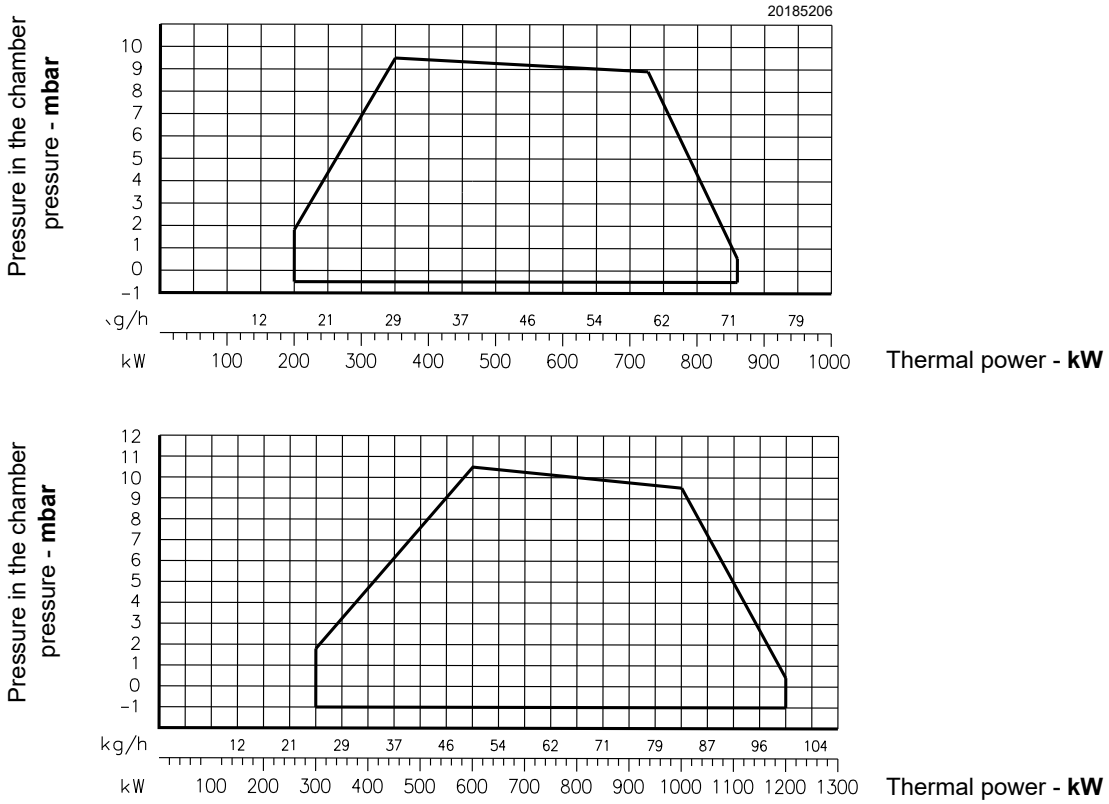

Fig. 3

4.9 Test boiler

The firing rates were obtained in special test boilers, according to EN 676 standard.

In (Fig. 4) you can see the diameter and length of the test combustion chamber.

Example:
Output 650 kW - diameter 60 cm
length 2 m

MODULATING RATIO

The modulating ratio, obtained in the test boilers, according to standard (EN 676 for gas, EN 267 for light oil), is of

– 3 : 1 (gas);
– 2 : 1 (light oil).

In case of gas operation, it is possible to use the burner with a different modulating ratio according to the application; for further information contact the manufacturer.

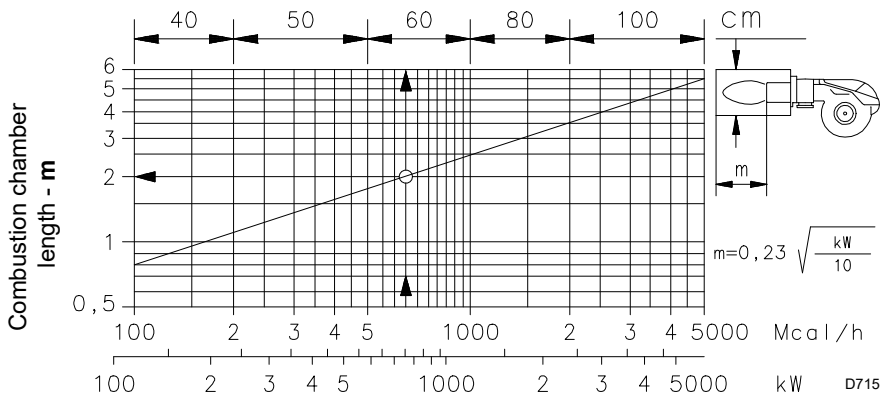

Fig. 4

4.10 Commercial boilers

Burners are suitable for operating on both flame inversion boilers (*) as well as on boilers with a combustion chamber with run-off from the bottom (three flue passes) on which the best results for low NO_x emissions are obtained.

The boiler front door maximum thickness must not exceed 250 mm (Fig. 5).

Although combination is guaranteed when boiler has a CE type-approval, preliminary tests are recommended for boilers or furnaces having a combustion chamber size much different than the one specified in the diagram (Fig. 4).

(*) For flame inversion boilers, a kit is available to reduce the CO, if necessary.

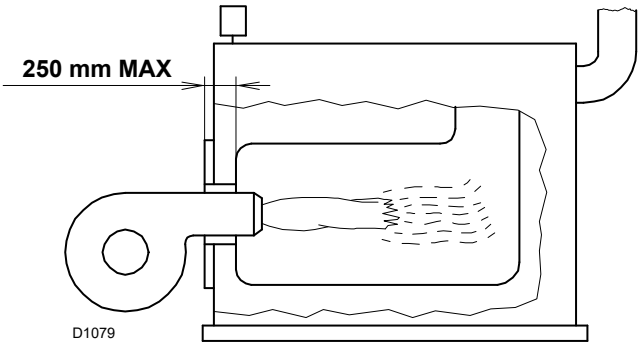

Fig. 5

4.11 Burner equipment

Flange for gas train . . . . . No. 1
Seal for flange . . . . . No. 1
Screws M10x35 to fix the gas flange . . . . . No. 4
Thermal flange gasket . . . . . No. 1
Screws M12x35 to fix the burner flange to the boiler . . . . . No. 4
Flexible hoses . . . . . No. 2
Fittings for flexible hoses . . . . . No. 2
Seals . . . . . No. 2
Instruction. . . . . No. 1
Spare parts list . . . . . No. 1

4.12 Burner description

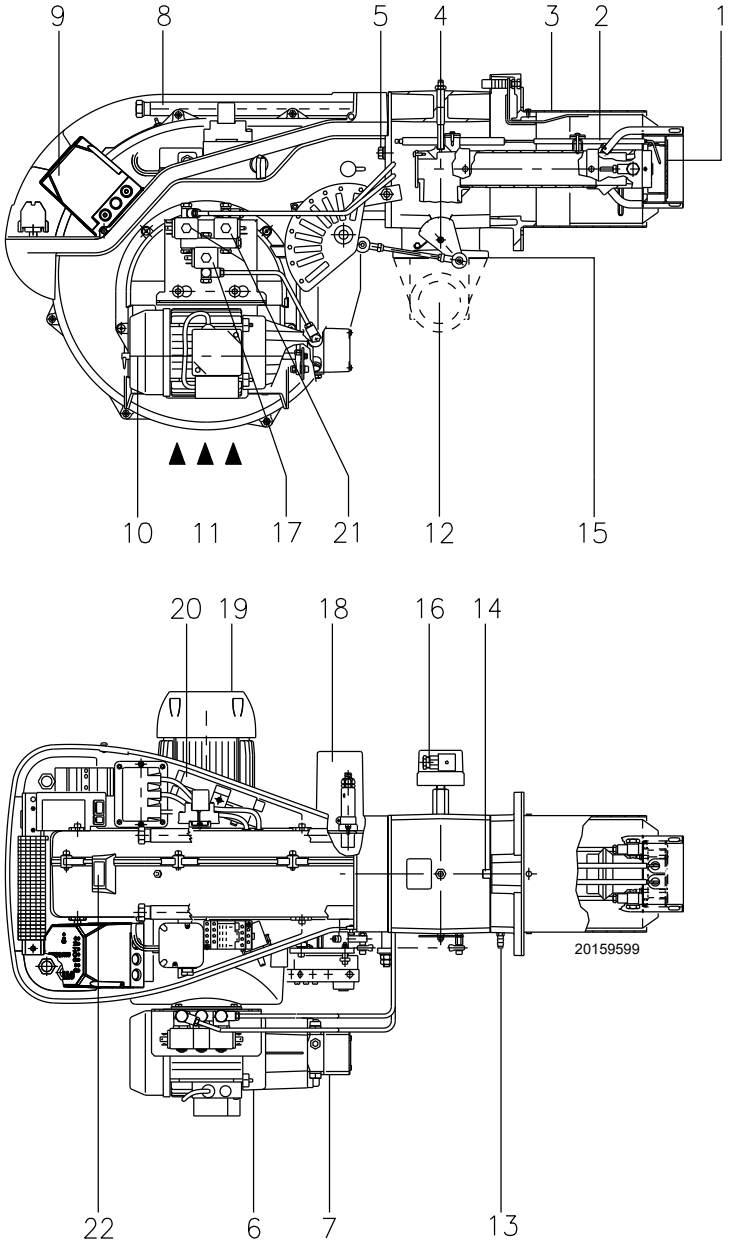

Fig. 6

1 Flame stability disc
2 Ignition electrodes
3 Combustion head
4 Gas pressure test point and head fixing screw
5 Screws to secure fan to pipe coupling
6 Pump motor
7 Pump
8 Slide bars for opening the burner and inspecting the combustion head
9 Electrical control box with lockout pilot light and reset button
10 Air damper
11 Air inlet to fan
12 Gas input pipe
13 Air pressure test point
14 Screw for combustion head adjustment
15 Pipe coupling with flange for fixing to the boiler and the gas butterfly valve
16 Maximum gas pressure switch
17 Safety valve
18 Servomotor controlling the gas butterfly valve and the air damper, by means of a variable profile cam mechanism. When the burner is not operating the air damper is fully closed in order to reduce heat dispersion from the boiler due to the flue draught, which draws air from the fan suction inlet.
19 Fan motor
20 Extensions for slide bars 8)
21 1st and 2nd stage valves
22 Flame inspection window

4.13 Electrical panel description

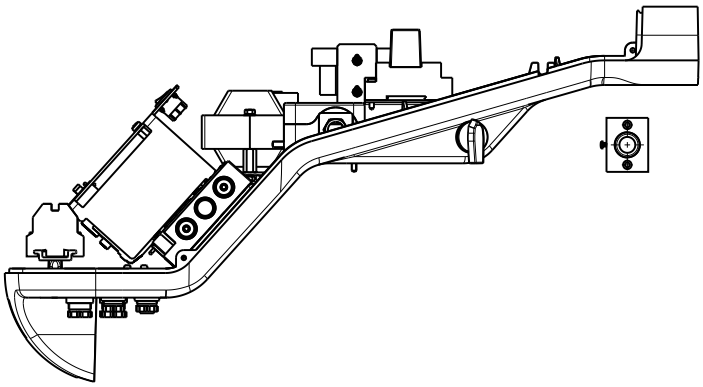

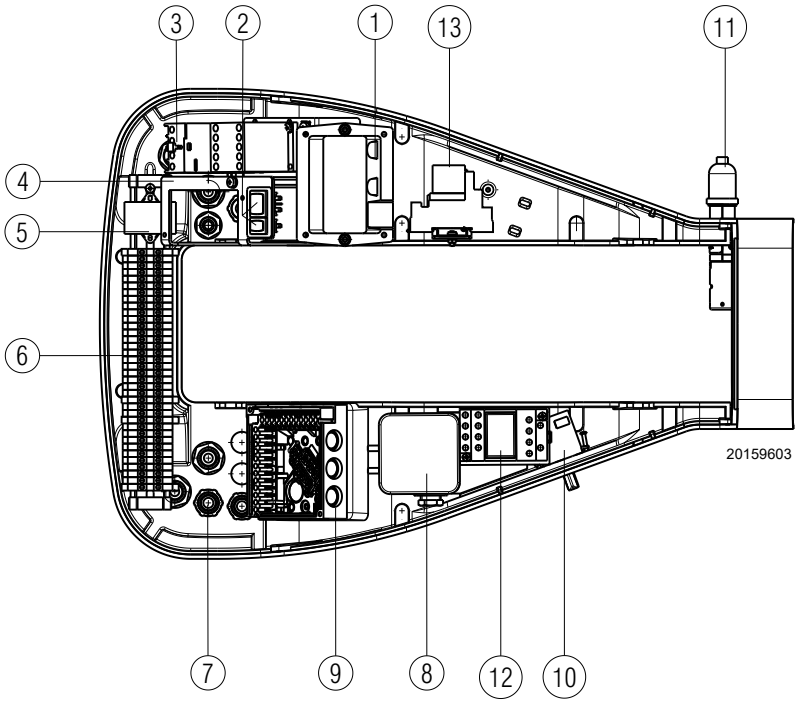

Fig. 7

1 Ignition transformer
2 A switch for:
automatic-manual-off operation
A button for:
output increase - decrease
3 Motor contactor and thermal relay with reset button
4 Bracket for application of RWF kit
5 Filter to protect against radio disturbance
6 Terminal board for electric connection
7 Cable grommets for external connections (to be carried out by the installer)
8 Air pressure switch (differential type)
9 Control box base
10 Oil - gas switch
11 Flame sensor
12 Relay
13 Relay

NOTE

Burner lockout may occur:

control box lockout: if the control box 9)(Fig. 6) push-button lights up, it indicates that the burner is in lockout.
Press the push button to reset.

4.14 Control box RFGO-A22

Important notes

ATTENTION

To avoid accidents, material or environmental damage, observe the following instructions!

The control box is a safety device! Avoid opening or modifying it, or forcing its operation. The Manufacturer cannot assume any responsibility for damage resulting from unauthorised work!

➤ All interventions (assembly and installation operations, assistance, etc.) must be carried out by qualified personnel.
➤ Before modifying the wiring in the control box connection area, fully disconnect the system from the power supply (omnipolar separation).
➤ Protection against electrocution from the control box and all connected electric components is obtained with the correct assembly.
➤ Before any intervention (assembly and installation operations, assistance, etc.), ensure the wiring is in order and that the parameters are correctly set, then make the safety checks.
➤ Falls and collisions can negatively affect the safety functions. In this case, the control box must not be operated, even if it displays no evident damage.

For safety and reliability, comply with the following instructions:
– avoid conditions that can favour the development of condensate and humidity. Otherwise, before switching on again, make sure that the entire control box is perfectly dry!
– Static charges must be avoided since they can damage the control box's electronic components when touched.

Use

The control box is a control and supervision system of medium and large capacity forced draught burners for intermittent operation (at least one controlled shutdown every 24 hours).

Installation notes

- Make sure that the electrical wiring inside the boiler complies with national and local safety regulations.
- Do not confuse the powered conductors with the neutral ones.
- Ensure that spliced wires cannot get into contact with neighbouring terminals. Use adequate ferrules.
- Arrange the H.V. ignition cables separately, as far as possible from the control box and the other cables.
- When wiring the unit, make sure that AC 230 V mains voltage cables are run strictly separate from extra low-voltage cables to avoid risks of electrical shock hazard.

Fig. 8

Technical data

Mains voltage	AC 230 V -15% / +10%
Mains frequency	50 / 60 Hz
Primary fuse (external)	Refer to the electric system
Weight	approx. 1.1 kg
Power absorption	approx. AC 7 VA
Protection level	IP40
Safety class	II
Environmental conditions	
Operation Climatic conditions Mechanical conditions Temperature range Humidity	DIN EN 60721-3-1 Class 1K2 Class 1M2 -40...+60°C < 90% RH (non-condensing)

Tab. G

Electrical wiring of the flame detector

It is important for signal transmission to be almost totally free of any disturbances or loss:
- Always separate the detector cables from the other cables:
  – The capacitive reactance of the line reduces the size of the flame signal.
  – Use a separate cable.
- Respect the allowed cable lengths.
- The ionisation probe is not protected against the risk of electrocution. When connected to the electricity supply, the ionisation probe must be protected against any accidental contact.
- Position the ignition electrode and the ionisation probe so that the ignition spark cannot form an arc on the probe (risk of electric overcharge).

4.15 Servomotor (SQN31...)

Important notes

ATTENTION

To avoid accidents, material or environmental damage, observe the following instructions!

Avoid opening, modifying or forcing the actuators.

- ➤ All interventions (assembly and installation operations, assistance, etc.) must be carried out by qualified personnel.
- ➤ Before modifying the wiring in the connection area of the servomotor, fully disconnect the burner control device from the power supply (omnipolar separation).
- ➤ To avoid the risk of electrocution, protect the connection terminals in a suitable manner and correctly fix the cover.
- ➤ Check the wiring is in order.
- ➤ Falls and collisions can negatively affect the safety functions. In this case, the servomotor must not be operated, even if it displays no evident damage.

Assembly notes

- Check the relevant national safety standards are respected.
- When assembling the servomotor and connecting the damper, the gears can be disengaged by means of a lever, allowing the drive shaft to be easily adjusted in both directions of rotation.

20160309

Fig. 9

Technical data

Operating voltage	AC 220...240 V - 15% / +10% AC 100...110 V - 15% / +10%
Mains frequency	50...60 Hz ± 6%
Switching capacity of auxiliary devices and limit switches	10 (3) A, AC 24...250 V
Angle positioning	up to 160° (full scale)
Assembly position	option
Protection level	IP 54, DIN 40050
Safety class	I
Weight	approx. 0.8 kg
Actuator motor	synchronous motor
Power absorption	6.5 VA
Environmental conditions:	
Operation Climatic conditions Mechanical conditions Temperature range Humidity	DIN EN 60 721-3-1 Class 1K2 Class 1M2 -20...+60°C < 95% RH

Tab. H

4.16 Calibration of the thermal relay

The thermal relay (Fig. 10) serves to avoid damage to the motor due to an excessive absorption increase or if a phase is missing. For calibration 2), refer to the table indicated in the electrical layout (electrical wiring by the installer).

To reset, in case of thermal relay activation, press the "RESET" button 1). The button “STOP” 3) opens the NC contact (95-96) and stops the motor. Insert a screwdriver in the window “TEST/ TRIP” 4) and move it in the arrow direction (to the right) to carry out the thermal relay test.

ATTENTION

The automatic reset can be dangerous.

This operation is not foreseen in the burner operation.

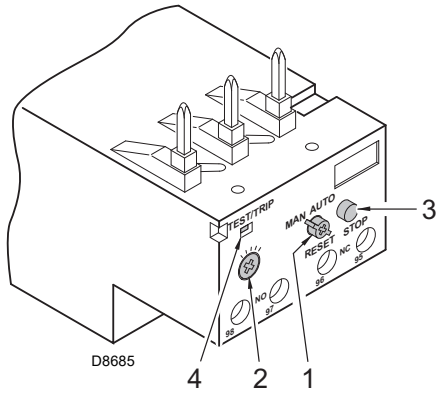

Fig. 10

4.17 Motor rotation

As soon as the burner starts, place yourself in front of the cooling fan of the fan motor and check that it turns anticlockwise (Fig. 11).

If this is not the case:

➤ put the switch of the burner to “0” (off) and wait until the control box carries out the switching off phase.

DANGER

Disconnect the electrical supply from the burner by means of the system main switch.

➤ Invert the phases on the three-phase motor power supply.

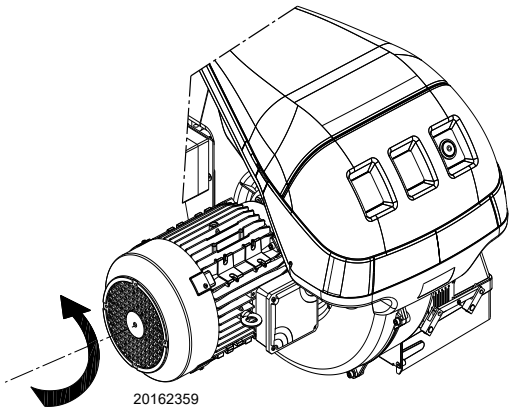

Fig. 11

5 Installation

5.1 Notes on safety for the installation

After carefully cleaning all around the area where the burner is to be installed, and arranging for the environment to be illuminated correctly, proceed with the installation operations.

DANGER

All the installation, maintenance and disassembly operations must be carried out with the electricity supply disconnected.

ATTENTION

The installation of the burner must be carried out by qualified personnel, as indicated in this manual and in compliance with the standards and regulations of the laws in force.

DANGER

The combustion air inside the boiler must be free from hazardous mixes (e.g.: chloride, fluoride, halogen); if present, it is highly recommended to carry out cleaning and maintenance more frequently.

5.2 Handling

The burner packaging includes a wooden platform, it is therefore possible to handle the burner (still packaged) with a pallet truck or fork lift truck.

ATTENTION

Burner handling operations can be highly dangerous if not carried out with the greatest attention: distance unauthorised personnel, check integrity and suitability of the means available.
Check also that the area in which you are working is empty and that there is an adequate escape area (i.e. a free, safe area to which you can quickly move if the burner should fall).
During handling, keep the load at no more than 20-25 cm from the ground.

After positioning the burner near the installation point, correctly dispose of all residual packaging, separating the various types of material.

CAUTION

Before proceeding with the installation operations, carefully clean all around the area where the burner will be installed.

5.3 Preliminary checks

Checking the consignment

CAUTION

After removing all the packaging, check the integrity of the contents. In the event of doubt, do not use the burner; contact the supplier.

The packaging elements (wooden cage or cardboard box, nails, clips, plastic bags, etc.) must not be abandoned as they are potential sources of danger and pollution; they should be collected and disposed of in the appropriate places.

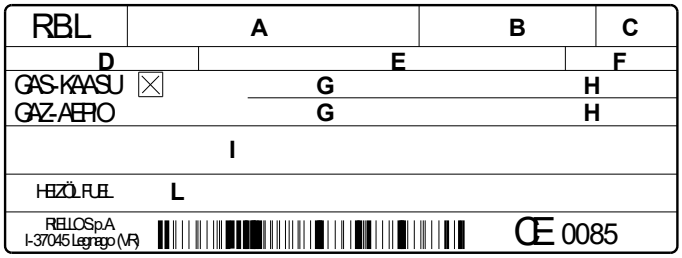

D9243

Fig. 12

Checking the characteristics of the burner

Check the identification label of the burner, showing:

- ➤ the model (**A**) (Fig. 12) and type of burner (**B**);
- ➤ the year of manufacture, in cryptographic form (**C**);
- ➤ the serial number (**D**);
- ➤ the data for electrical supply and the protection level (**E**);
- ➤ the absorbed electrical power (**F**);
- ➤ the types of gas used and the relative supply pressures (**G**);
- ➤ the data of the burner's minimum and maximum output possibilities (**H**) (see Firing rate).
  Warning. The burner output must be within the firing rate of the boiler;
- ➤ the category of the appliance/countries of destination (**I**).
- ➤ light oil maximum viscosity (**L**).

ATTENTION

A burner label that has been tampered with, removed or is missing, along with anything else that prevents the definite identification of the burner makes any installation or maintenance work difficult

5.4 Operating position

ATTENTION

- ➤ The burner is designed to operate only in positions **1**, **2**, **3** and **4** (Fig. 13).
- ➤ Installation **1** is preferable, as it is the only one that allows the maintenance operations as described in this manual.
- ➤ Installations **2**, **3** and **4** allow operation but make maintenance and inspection of the combustion head more difficult.

DANGER

- ➤ Any other position could compromise the correct operation of the appliance.
- ➤ The installation **5** is prohibited for safety reasons.

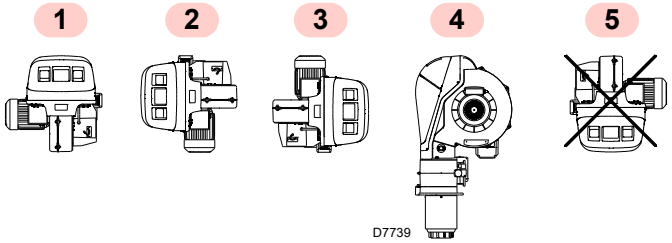

Fig. 13

5.5 Preparing the boiler

5.5.1 Boring the boiler plate

Pierce the closing plate of the combustion chamber, as in Fig. 14.

The position of the threaded holes can be marked using the thermal insulation screen supplied with the burner.

mm	A	B	C
RLS 68/M MX	195	275 - 325	M 12
RLS 120/M MX	195	275 - 325	M 12

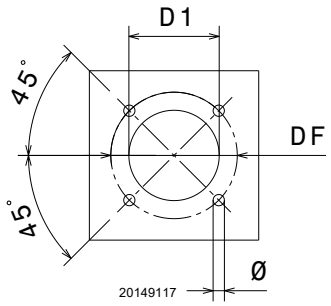

Fig. 14

5.5.2 Blast tube length

The length of the blast tube must be selected according to the indications provided by the manufacturer of the boiler, and in any case it must be greater than the thickness of the boiler door complete with its fettling.

RLS 68-120/M MX	A
Standard	260
Elongated	395

For boilers with front flue passes 15)(Fig. 15 on page 20), or flame inversion chamber, a protection in refractory material 13) must be inserted between the boiler fettling 14) and the blast tube 12).

This protection must not compromise the extraction of the blast tube.

For boilers with a water-cooled front piece, a refractory lining 13)-14)(Fig. 15 on page 20) is not necessary, unless expressly requested by the boiler manufacturer.

5.6 Securing the burner to the boiler

Provide an adequate lifting system.
Separate the combustion head from the rest of the burner, Fig. 15:

- ➤ disconnect the light oil pipes unscrewing the two unions 6).
- ➤ Disengage the articulated coupling 7) from the graduated sector 8).
- ➤ Loosen the 4 screws 3) and remove the hood 1).
- ➤ Remove the screws 2) from the two slide bars 5).
- ➤ Remove the two screws 4) and pull the burner back on slide bars 5) by about 100 mm.
- ➤ Disconnect the electrode cables, then completely unthread the burner from the slide bars. Fix the pipe coupling with the flange 11)(Fig. 15) to the boiler plate interposing the insulating gasket 9)(Fig. 15) supplied with the equipment. Use the 4 screws, also supplied, after protecting their thread with an anti-locking product.

ATTENTION

The seal between burner and boiler must be airtight.

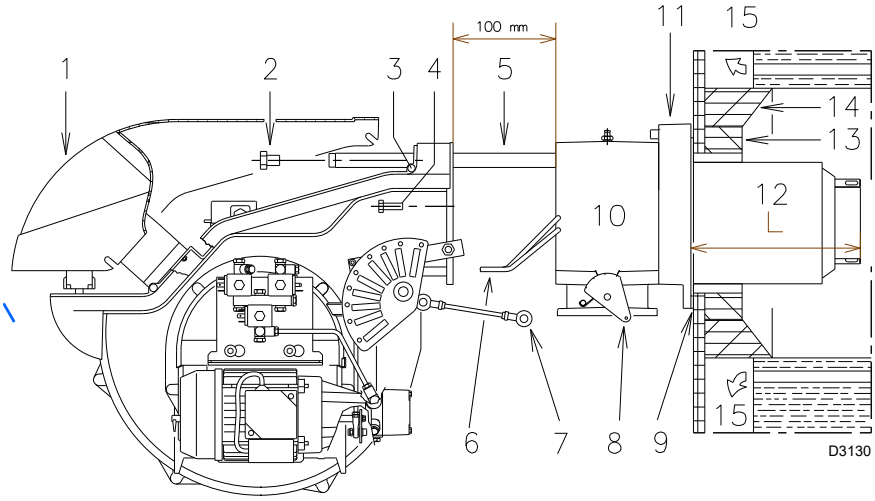

Fig. 15

5.7 Electrode position

ATTENTION

Position the ignition electrode according to the dimensions shown in Fig. 16.

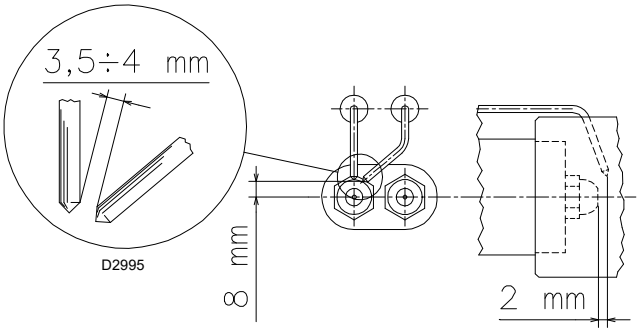

Fig. 16

5.8 Choice of nozzles for the 1st and 2nd stage

Both nozzles must be chosen from among those listed in Tab. I.

The first nozzle determines the delivery of the burner at the 1st stage.

The second nozzle works together with the 1st nozzle to determine the delivery of the burner in the 2nd stage.

The outputs of the 1st and 2nd stage have to be within the value range indicated in Tab. C.

Use nozzles with a 60° spray angle at the recommended pressure of 12 bar.

Generally the two nozzles have the same flow rate but the nozzle of the 1st stage can have an output that is 50% lower than the total output, when you want to reduce the back pressure peak on ignition (the burner provides good combustion values also with 40 - 100% ratios between the 1st and 2nd stage).

Example:

Boiler power = 900 kW - efficiency 90%
Burner requested output = 900: 0.9=1000 kW;

1000: 2=500 kW per nozzle

so two equal nozzles of 60°, 12 bar are required:

➤ 1° = 10 GPH
➤ 2° = 10 GPH

or the following two different nozzles:

➤ 1° = 12 GPH
➤ 2° = 8 GPH

GPH	kg/h			kW
	10 bar	12 bar	14 bar	12 bar
5.00	19.2	21.2	23.1	251.4
5.50	21.1	23.3	25.4	276.3
6.00	23.1	25.5	27.7	302.4
6.50	25.0	27.6	30.0	327.3
7.00	26.9	29.7	32.3	352.3
7.50	28.8	31.8	34.6	377.2
8.00	30.8	33.9	36.9	402.1
8.30	31.9	35.2	38.3	417.5
8.50	32.7	36.1	39.2	428.2
9.00	34.6	38.2	41.5	453.1
9.50	36.5	40.3	43.8	478.0
10.0	38.4	42.4	46.1	502.9
10.5	40.4	44.6	48.4	529.0
11.0	42.3	46.7	50.7	553.9
12.0	46.1	50.9	55.3	603.7
12.3	47.3	52.2	56.7	619.1
13.0	50.0	55.1	59.9	653.5
13.8	53.1	58.5	63.3	693.8
14.0	53.8	59.4	64.5	704.5
15.0	57.7	63.6	69.2	754.3
15.3	58.8	64.9	70.5	769.7
16.0	61.5	67.9	73.8	805.3
17.0	65.4	72.1	78.4	855.1
17.5	67.3	74.2	80.7	880.0
18.0	69.2	76.4	83.0	906.1
19.0	73.0	80.6	87.6	956.0
19.5	75.0	82.7	89.9	980.9
20.0	76.9	84.8	92.2	1005.8
21.5	82.7	91.2	99.1	1081.7
22.0	84.6	93.3	101.4	1106.6
22.5	86.5	95.5	103.7	1132.6
23.0	88.4	97.6	106.0	1157.5
23.5	90.4	99.7	108.3	1182.4
24.0	92.2	101.8	110.6	1207.3

Tab. I

5.9 Nozzle installation

The burner complies with the emission requirements of the EN 267 standard. In order to guarantee that emissions do not vary, recommended and/or alternative nozzles specified by Riello in the Instruction and warning booklet should be used.

ATTENTION

It is advisable to replace the nozzle once a year during periodical maintenance.

CAUTION

The use of nozzles other than those specified by Riello S.p.A. and inadequate regular maintenance may result into emission limits non-conforming to the values set forth by the regulations in force, and in extremely serious cases, into potential hazards to people and objects.

The manufacturing Company shall not be liable for any such damage arising from non-observance of the requirements contained in this manual.

Remove the screw 1)(Fig. 17) and extract the internal part 2)(Fig. 17). Assemble the two nozzles with the socket spanner 1)(Fig. 18) (16 mm), after removing the plastic plugs 2)(Fig. 18), passing through the central opening of the flame stability disc. Alternatively, loosen the screws 1)(Fig. 19), remove the disc 2)(Fig. 19), and replace the nozzles using the spanner 3)(Fig. 19).

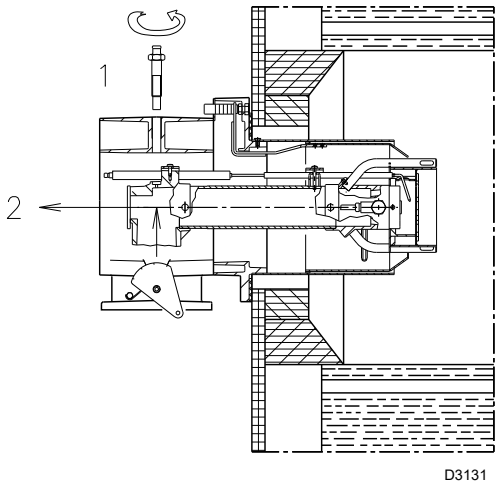

Fig. 17

Do not use any sealing products such as: gaskets, tape or sealants. Be careful to avoid damaging the nozzle sealing seat. The nozzle must be screwed into place tightly but not to the maximum torque value provided by the wrench.

The nozzle for the 1st stage of operation is the one beneath the ignition electrodes, Fig. 16.

Check that the electrodes are placed as in Fig. 16.

Reassemble the burner on the guides 3)(Fig. 20) at about 100 mm from the pipe coupling 4)(Fig. 20); see in the position shown in Fig. 15.
Insert the electrode cables and then slide the burner up to the pipe coupling, the burner in the position indicated in Fig. 20.

Refit screws 2) on slide bars 3)(Fig. 20).

Fix the burner to the pipe coupling with screws 1)(Fig. 20).

Reconnect the light oil pipes by screwing the two fittings 6)(Fig. 15).

Reconnect the articulated coupling 7) to the graduated sector 5)(Fig. 20).

ATTENTION

- ➤ Do not use any sealing products such as: gaskets, tape or sealants.
- ➤ Be careful to avoid damaging the nozzle sealing seat.
- ➤ The nozzle must be screwed into place tightly but not to the maximum torque value provided by the wrench.
- ➤ On closing the burner on the two guides it is advisable to gently pull the high voltage wires outwards until they are under slight tension.

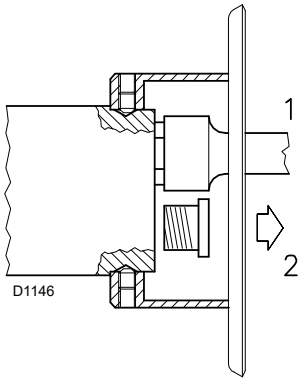

Fig. 18

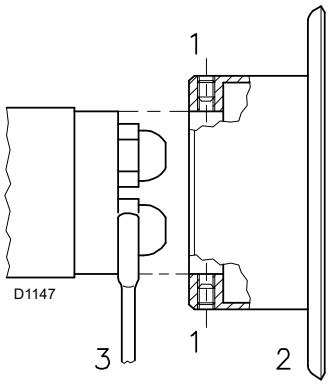

Fig. 19

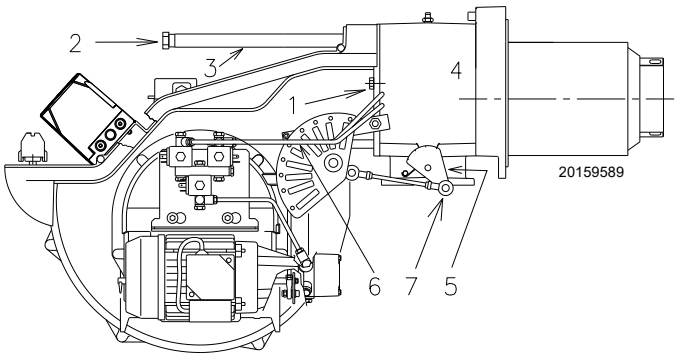

Fig. 20

5.10 Combustion head adjustment

The adjustment of the combustion head depends only on the maximum output of the burner.

Turn the screw 5)(Fig. 21) until the notch indicated in diagram (Fig. 22) corresponds with the front part of the flange 6)(Fig. 21).

ATTENTION

To facilitate the adjustment, loosen the screw 1)(Fig. 17), adjust, then block.

Example: Burner RLS 68/M MX

Burner maximum output = 650 kW.

The diagram (Fig. 22) shows that for this output, the adjustment of the combustion head is carried out on notch 2.

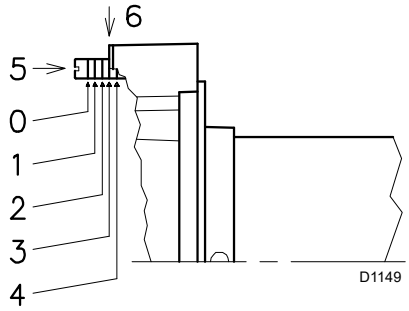

Fig. 21

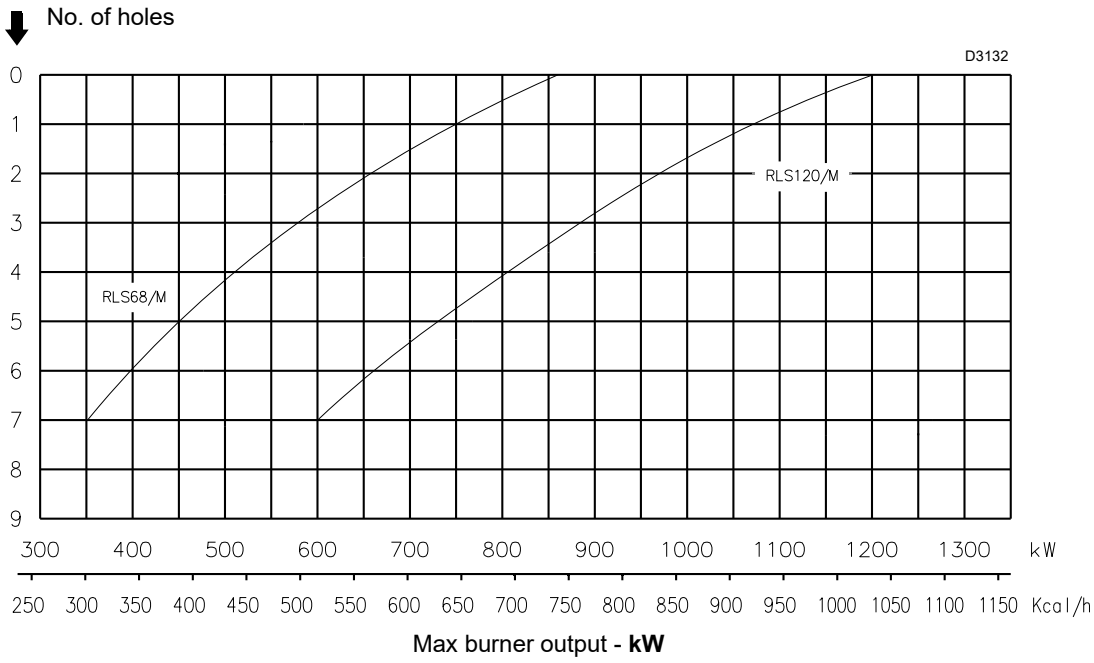

Fig. 22

5.11 Light oil supply

Explosion danger due to fuel leaks in the presence of a flammable source.

Precautions: avoid knocking, attrition, sparks and heat.

Make sure the fuel shut-off valve is closed before performing any operation on the burner.

ATTENTION

The fuel supply line must be installed by qualified personnel, in compliance with current standards and laws.

5.11.1 Double-pipe circuit

The burner is equipped with a self-priming pump which is capable of supplying itself within the limits listed in the Tab. J.

Tank higher than burner A (Fig. 23)
Distance P must not exceed 10 meters in order to avoid straining the pump's seal; distance V must not exceed 4 meters in order to allow the self-priming of the pump even when the tank is almost empty.

Tank lower than burner B (Fig. 23)
The pump depression value must not exceed 0.45 bar (35 cm Hg). Because at higher levels gas is released from the fuel; the pump becomes noisy and its lifetime is shortened. It is good practice to ensure that the return and suction lines enter the burner from the same height; the suction line is more difficult to disconnect.

5.11.2 Loop circuit

The loop circuit is composed of a duct starting from the tank and going back to it, in which an auxiliary pump makes the pressurised fuel flow.

A branch from the loop supplies the burner.

This circuit is extremely useful whenever the burner pump does not succeed in self-priming because the tank distance and/or height difference are higher than the values listed in Tab. J.

H (m)	L (m)		
	Ø (mm)		
	12	14	16
4	71	138	150
3	62	122	150
2	53	106	150
1	44	90	150
0.5	40	82	150
0	36	74	137
-0.5	32	66	123
-1	28	58	109
-2	19	42	81
-3	10	26	53
-4	-	10	25

Tab. J

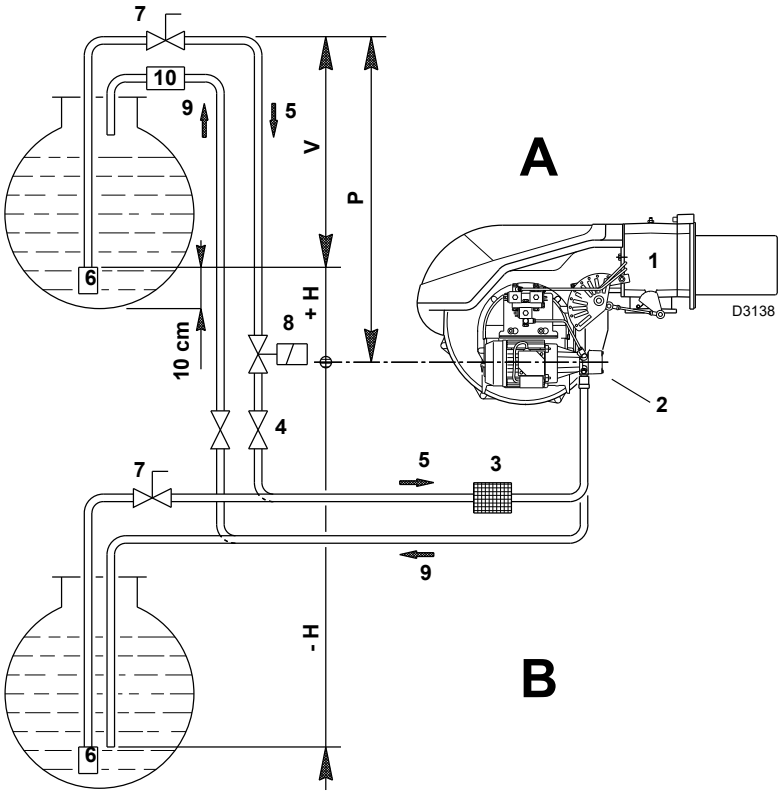

Fig. 23

Key (Fig. 23)

H = Pump/Foot valve height difference
L = Piping length
Ø = Inside pipe diameter
1 = Burner
2 = Pump
3 = Filter
4 = Manual on/off valve
5 = Suction line
6 = Foot valve
7 = Quick closing manual valve with remote control (Italy only)
8 = On/off solenoid valve (Italy only). See electrical diagram. Connections to be carried out by the installer (SV).
9 = Return line
10 = Check valve (Italy only)

5.11.3 Hydraulic connections

The pumps are equipped with a by-pass that connects return line with suction line.

They are installed on the burner with the by-pass closed by screw 6)(Fig. 25).

It is therefore necessary to connect both hoses to the pump.

The pump will break down immediately if it is run with the return line closed and the by-pass screw inserted.

Remove plugs from suction and return connectors of the pump.

Insert the hose connections with the supplied seals into the connections and screw them down.

During the installation, hoses must not be stressed with twisting.

Position hoses so that they cannot be stepped on or get into contact with hot parts of the boiler and so that they allow burner opening.

Connect, finally, the other end of the flexible hoses to the suction and return lines using nipples supplied with the equipment.

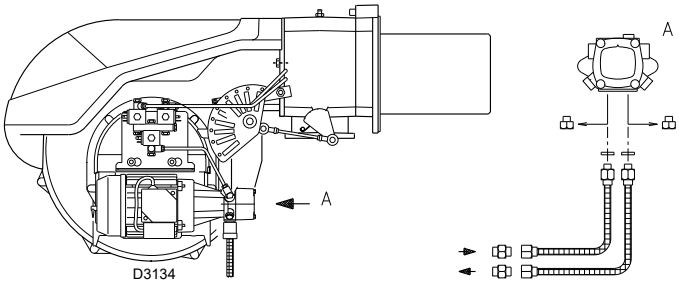

Fig. 24

5.11.4 Hydraulic circuit diagram

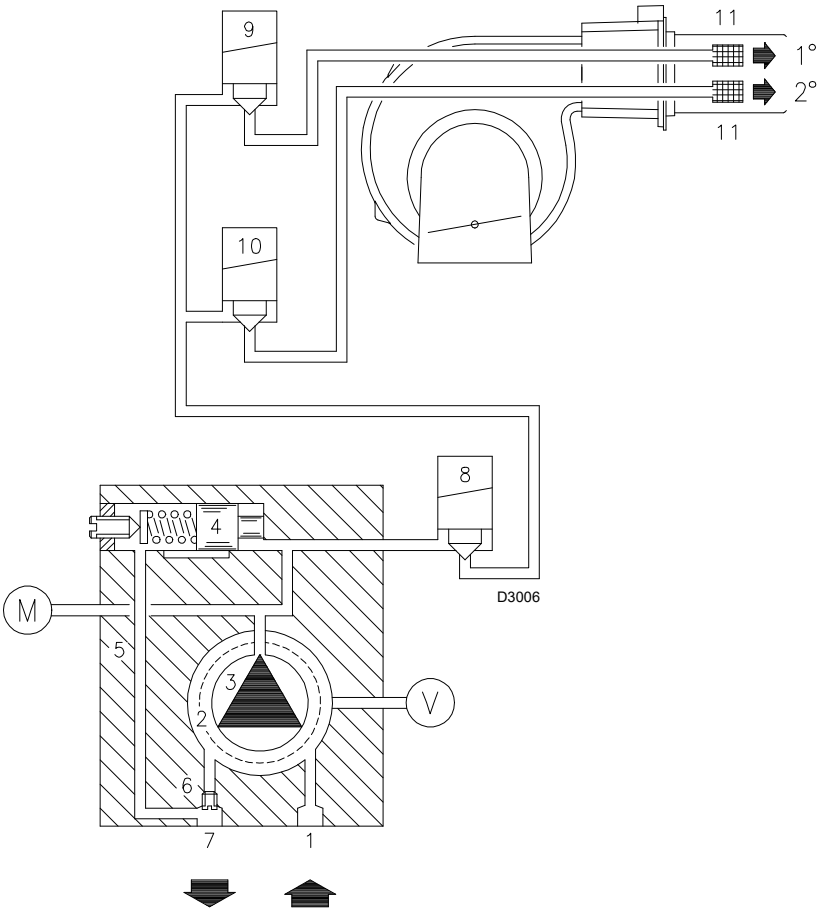

Fig. 25

Key (Fig. 25)

1 Pump suction line
2 Filter
3 Pump
4 Pump pressure regulator
5 Return pipe
6 Bypass screw
7 Pump return line
8 Safety valve
9 1st stage valve
10 2nd stage valve
11 Filter
M Pressure gauge
V Vacuometer connection

5.11.5 Operation

- **Pre-purging phase**: valves 5), 6), 13) and 14) closed.
- **Ignition and operation phase**: valves 5), 6), 13) and 14) open.
- **Stop:** all valves closed.

5.11.6 Pump

Technical data

PUMP AJ6 CC

Min. delivery rate at 12 bar pressure	220 kg/h
Delivery pressure range	10 - 20 bar
Max. suction depression	0.45 bar
Viscosity range	2.8 - 75 cSt
Max. light oil temperature	60 °C
Max. suction and return pressure	2 bar
Pressure calibration in the factory	12 bar
Filter mesh width	0.150 mm

Tab. K

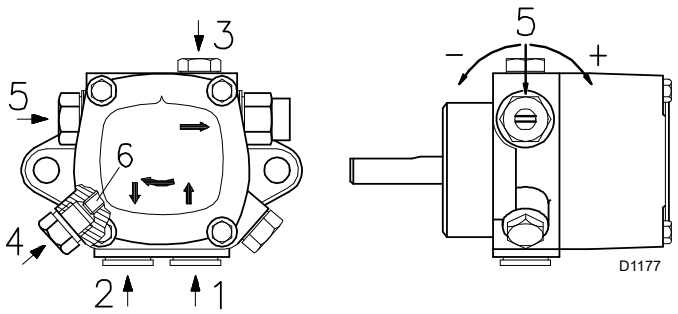

Fig. 26

Key (Fig. 26)

1	Suction line	G 1/4"
1	Return line	G 1/4”
1	Pressure switch connection	G 1/8”
1	Vacuometer connection	G 1/8”
1	Pressure adjuster	
1	By-pass screw	

5.11.7 Pump adjustment

No adjustment of gas delivery is required.

The pump leaves the factory set at 12 bar, a pressure to be checked and eventually modified after the burner has been started. In this phase, therefore, limit to apply a pressure gauge on the specific pump connector.
It may be necessary to adjust the pump to:

10 bar in order to reduce fuel delivery.
It is possible only if the ambient temperature remains above 0 C;

14 bar in order to increase fuel delivery or to ensure firings even at temperatures of less than 0 °C.

5.11.8 Priming pump

ATTENTION

Before starting the burner, make sure that the tank return line is not clogged.

Obstructions in the line could cause the sealing organ located on the pump shaft to break. (The pump leaves the factory with the by-pass closed).

- ➤ Make sure that the valves on the suction line are open and that there is fuel in the tank.
- ➤ In order for self-priming to take place the screw 3) (Fig. 26) of the pump (Fig. 26) must be loosened in order to bleed off the air contained in the suction line.
- ➤ Start the burner by closing the control devices, with the switch 1)(Fig. 27) in “MAN” position and switch 10)(Fig. 7) in “OIL” position.
- ➤ The pump can be considered primed when the light oil starts coming out of the screw 3)(Fig. 26). Stop the burner: set switch 1)(Fig. 27) to "OFF" and tighten the screw 3)(Fig. 26).
- ➤ The time required for this operation depends upon the diameter and length of the suction tubing. If the pump fails to prime at the first starting of the burner and the burner locks out, wait approx. 15 seconds, reset the burner, and then repeat the starting operation as often as required. And so on.
  After 5 or 6 starting operations allow 2 or 3 minutes for the transformer to cool.
- ➤ Do not light the UV cell in order to prevent the burner lockout; the burner locks out in any case about ten second after its start.

ATTENTION

The above-mentioned operation is possible because the pump is already full of fuel when it leaves the factory.
If the pump has been drained, fill it with fuel through the opening on the vacuum meter prior to starting; otherwise, the pump will seize.

Whenever the length of the suction piping exceeds 20-30 meters, the supply line must be filled using a separate pump.

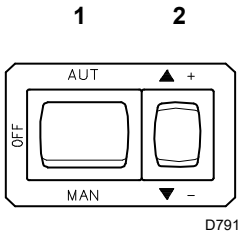

Fig. 27

5.12 Gas supply

DANGER

Explosion danger due to fuel leaks in the presence of a flammable source.

Precautions: avoid knocking, attrition, sparks and heat.

Make sure the fuel shut-off valve is closed before performing any operation on the burner.

ATTENTION

The fuel supply line must be installed by qualified personnel, in compliance with current standards and laws.

5.12.1 Gas feeding line

Key (Fig. 28 - Fig. 29 - Fig. 30 - Fig. 31)

1 Gas input pipe
2 Manual valve
3 Vibration damping joint
4 Pressure gauge with button cock
5 Filter
6A Includes:
- filter
- working valve
- safety valve
- pressure adjuster

6B Includes:
- working valve
- safety valve
- pressure adjuster

6C Includes:
- safety valve
- working valve

6D Includes:
- safety valve
- working valve

7 Minimum gas pressure switch
8 Leak detection control, supplied as an accessory or built-in, based on the gas train code. In compliance with the EN 676 standard, gas valve leak detection control devices are compulsory for burners with maximum outputs over 1200 kW.
9 Gasket, for “flanged” versions only
10 Pressure adjuster
11 Train-burner adaptor, supplied separately
P2 Pressure upstream of valves/adjuster
P3 Pressure upstream of the filter
L Gas train, supplied separately
L1 Responsibility of the installer

MBC “threaded”

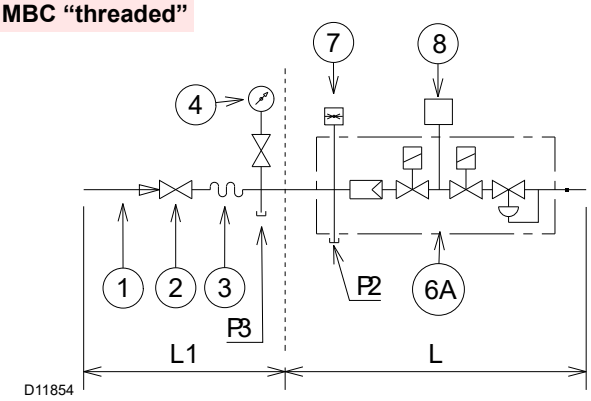

Fig. 28

MBC “flanged”-VGD

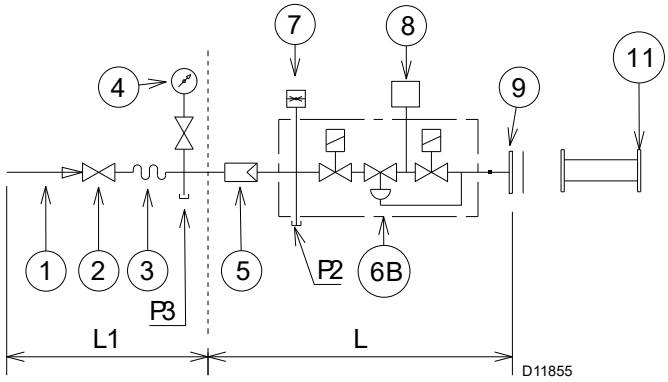

Fig. 29

DMV “flanged or threaded”

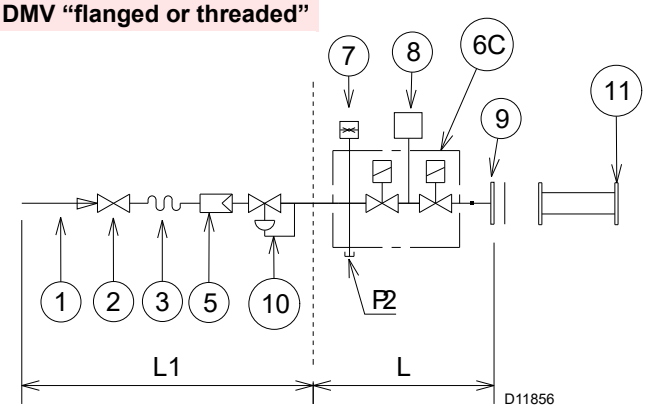

Fig. 30

CB “flanged or threaded”

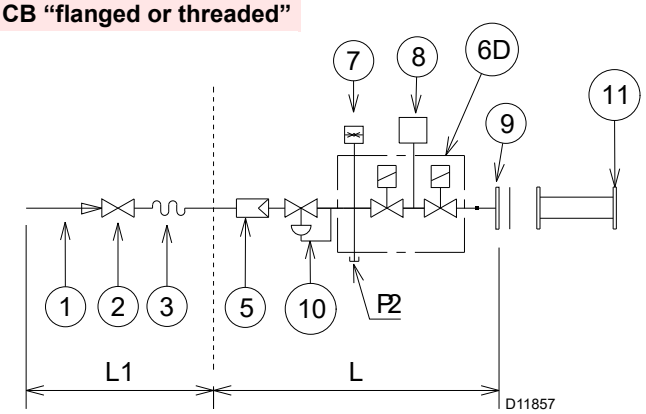

Fig. 31

5.12.2 Gas train

Type-approved in accordance with EN 676 and supplied separately from the burner.

5.12.3 Gas train installation

DANGER

Disconnect the power supply using the system main switch.

Check that there are no gas leaks.

Pay attention when handling the train: danger of crushing of limbs.

Make sure that the gas train is properly installed by checking for any fuel leaks.

The operator must use the required equipment during installation.

- The gas train must be connected to the gas connection 1) (Fig. 32), using the flange 2), the gasket 3) and the screws 4) supplied with the burner.
- The train can enter the burner from the right or left side, depending on which is the most convenient, see Fig. 32.
- The gas solenoids must be as close as possible to the burner to ensure that the gas reaches the combustion head within the safety time of 3s.
- Make sure that the pressure governor calibration range (colour of the spring) includes the pressure required by the burner.

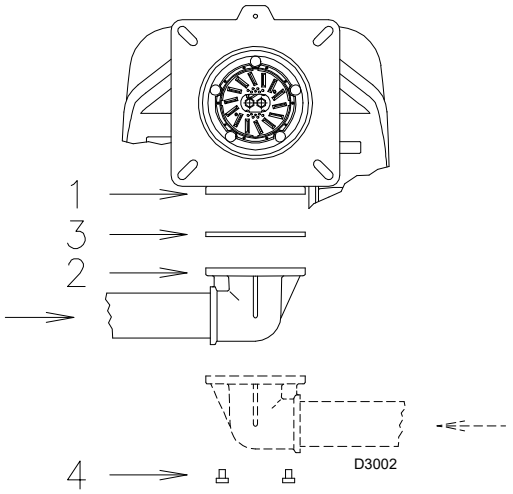

Fig. 32

5.12.4 Gas pressure

Tab. L indicates the pressure drops of the combustion head and gas butterfly valve depending on the burner operating output.

	kW	(mbar) G 20	G 25	G 31
RLS 68/M MX	350	2.9	4.3	3.7
	407	3.8	5.7	5.0
	463	4.8	7.2	6.3
	520	5.9	8.8	7.6
	577	7.0	10.4	9.0
	633	8.1	12.1	10.5
	690	9.2	13.8	12.0
	747	10.5	15.6	13.6
	803	11.7	17.4	15.2
	860	13.0	19.4	16.9
RLS 120/M MX	600	4.9	7.3	6.4
	667	6.6	9.9	8.6
	733	8.3	12.4	10.8
	800	10.0	15.0	13.0
	867	11.7	17.6	15.3
	933	13.5	20.1	17.5
	1000	15.2	22.7	19.8
	1067	17.0	25.4	22.2
	1133	18.7	28.0	24.5
	1200	20.5	30.6	26.8

Tab. L

ATTENTION

Data of head thermal power and gas pressure refer to operation with gas butterfly valve fully open (90°).

The values shown in Tab. L refer to:
– Natural gas G 20 NCV 9.45 kWh/Sm^3 (8.2 Mcal/Sm^3)
– Natural gas G 25 NCV 8.13 kWh/Sm^3 (7.0 Mcal/Sm^3)

The adjacent table shows the minimum pressure drops along the gas supply line depending on the maximum burner output.

Combustion head pressure drop.

Gas pressure measured at test point 1)(Fig. 33), with:

- combustion chamber at 0 mbar;
- combustion head adjusted as in the diagram Fig. 22.

Calculate the approximate maximum output of the burner in this way:

Subtract the combustion chamber pressure from the gas pressure measured at test point 1)(Fig. 33).

Find in Tab. L the pressure value closest to the result of the subtraction.

Read the corresponding output on the left.

Example with natural gas G20 - RLS 68/M MX:
Operation at maximum modulating output: 860 kW

Gas pressure at test point 1)(Fig. 33)	=	16.0 mbar
Pressure in combustion chamber	=	3.0 mbar
16.0 - 3.0	=	13.0 mbar

A pressure of 13.0 mbar corresponds in Tab. L to an output of 860 kW.

This value serves as a rough guide; the effective output must be measured at the gas meter.

To calculate the required gas pressure at test point 1) (Fig. 33), set the maximum output required from the burner operation:

Find in Tab. L the output value closest to the desired value.

Read, on the right, the pressure at test point 1)(Fig. 33).

Add this value to the estimated pressure in combustion chamber.

Example with natural gas G20 - RLS 68/M MX:
Operation at maximum modulating output: 860 kW

Gas pressure at test point 1)(Fig. 33)	=	13.0 mbar
Pressure in combustion chamber	=	3.0 mbar
13.0 + 3.0	=	16.0 mbar

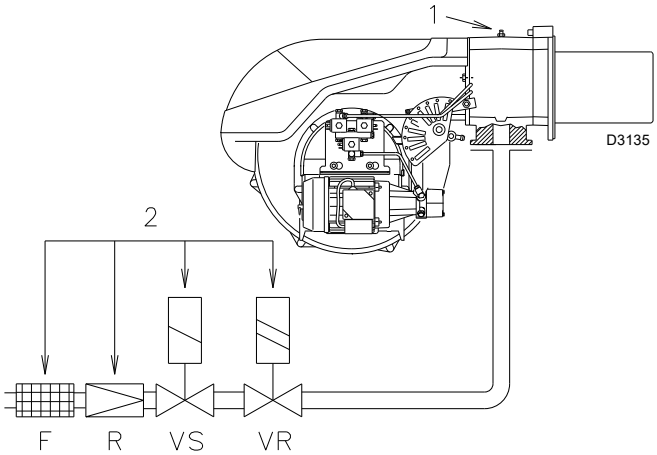

Fig. 33

5.13 Electrical connections

Notes on safety for the electrical wiring

DANGER

- ➤ The electrical wiring must be carried out with the electrical supply disconnected.
- ➤ Electrical wiring must be made in accordance with the regulations currently in force in the country of destination and by qualified personnel. Refer to the wiring diagrams.
- ➤ The manufacturer declines all responsibility for modifications or connections different from those shown in the wiring diagrams.
- ➤ Check that the electrical supply of the burner corresponds to that shown on the identification label and in this manual.
- ➤ Burners have been type-approved for intermittent operation (FS1). Burner FS2 operation has also been approved only with the use of a flame detection electrode (ionisation).
- ➤ The RFGO safety device features two built-in flame amplifiers which allow using it for applications with UV sensor only, FR sensor only or with both sensors (UV+FR). The FR amplifier circuit is subject to constant auto-control, which allows to use it for applications requiring a burner operating cycle longer than 24 hours. When it is used as a UV control, the system is considered as non-permanent, requiring one burner recycle every 24 hours.
  Normally, burner stopping is guaranteed by the boiler's thermostat/pressure switch.
  If this is not the case, a time switch must be applied to L-N in series, to stop the burner at least once every 24 hours. Refer to the wiring diagrams.
- ➤ The electrical safety of the device is obtained only when it is correctly connected to an efficient earthing system, made according to current standards. It is necessary to check this fundamental safety requirement. In the event of doubt, have the electrical system checked by qualified personnel. Do not use the gas tubes as an earthing system for electrical devices.
- ➤ The electrical system must be suitable for the maximum power absorption of the device, as indicated on the label and in the manual, checking in particular that the section of the cables is suitable for that level of power absorption.
- ➤ For the main power supply of the device from the electricity mains:
  - do not use adapters, multiple sockets or extensions;
  - make provisions for an omnipolar switch with a gap between the contacts of at least 3 mm (over-voltage category III), as required by current safety regulations.
- ➤ Do not touch the device with wet or damp body parts and/or in bare feet.
- ➤ Do not pull the electric cables.

Before carrying out any maintenance, cleaning or checking operations:

DANGER

Disconnect the electrical supply from the burner by means of the system main switch.

DANGER

Close the fuel shut-off valve.

DANGER

Avoid condensate, ice and water leaks from forming.

If the cover is still present, remove it and proceed with the electrical wiring according to the wiring diagrams.

Use flexible cables according to EN 60 335-1 standard.

5.13.1 Supply cables and external connections passage

All the cables to be connected to the burner terminal board 6)(Fig. 34) must be threaded through cable grommets, as shown in Fig. 34.

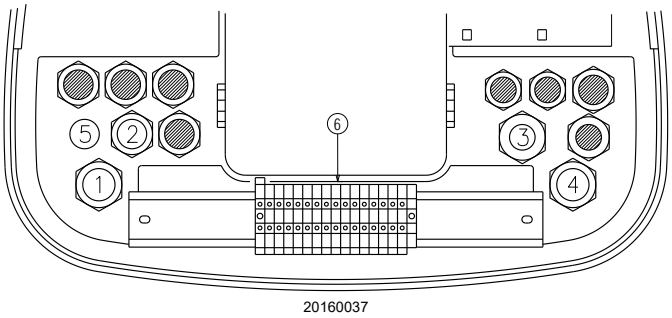

Fig. 34

Key (Fig. 34)

1	Pg 13.5	Three-phase power supply
2	Pg 13.5	Single-phase power supply
3	Pg 16	Enabling signals/Adjustments
4	Pg 13.5	Gas pressure switch or valve leak detection control device
5	Drill if you wish to add a union	

After carrying out maintenance, cleaning or checking operations, reassemble the cover and all the safety and protection devices of the burner.

6 Start-up, calibration and operation of the burner

6.1 Notes on safety for the first start-up

ATTENTION

The first start-up of the burner must be carried out by qualified personnel, as indicated in this manual and in compliance with the standards and regulations of the laws in force.

ATTENTION

Check the correct working of the adjustment, command and safety devices.

ATTENTION

Before starting up the burner, refer to section "Safety test - with no gas supply" on page 39.

6.2 Servomotor adjustment

The servomotor provides simultaneous adjustment for the air damper, by means of the adjustable profile cam and the gas butterfly valve.
The servomotor rotates by 130° in 42 s.

Do not alter the factory setting for the 5 cams; just check that they are as specified below:

Cam I **: 130°**
Limits rotation toward maximum position.
When the burner is operating at MAX output, the gas butterfly valve must be fully open: 90°.

Cam II **: 0°**
Limits rotation toward minimum position.
When the burner is shut down, the air damper and gas butterfly valve must be closed: 0°.

Cam III **: 30° (gas)**
Adjusts the ignition position and the MIN output.

Cam IV **: 30° (oil)**
Adjusts the ignition position and the output of the 1st stage.

Cam V **: 90°** Determines when the 2nd stage light oil valve opens.

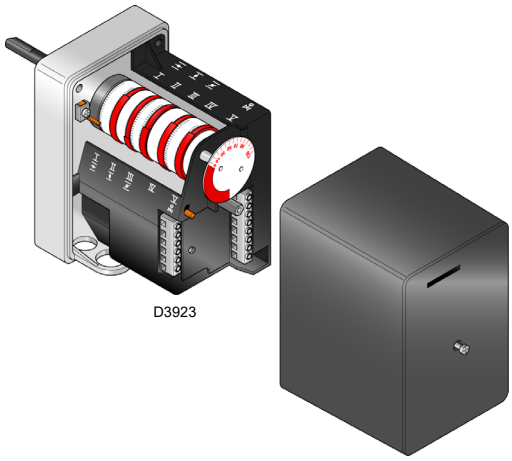

Fig. 35

6.3 Adjustments prior to ignition (light oil)

ATTENTION

It is recommended to adjust first the light oil burner and then the gas burner.

Carry out the fuel change with burner off.

The optimum calibration of the burner requires an analysis of the flue gases at the boiler outlet and interventions on the following points.

1st and 2nd stage nozzles

See information on page 21.

Combustion head

The adjustment of the combustion head already carried out needs not to be altered unless the 2nd stage output of the burner is changed.

Pump pressure

12 bar: this is the factory-calibrated pressure, which is usually enough for most applications.

Sometimes, this pressure must be adjusted to:

10 bar: in order to reduce fuel delivery.
This adjustment is possible only if the surrounding ambient temperature remains above 0 C.

14 bar: To increase fuel flow rate or ensure the ignition also at temperatures lower than 0°C.
To adjust pump pressure use screw 5)(Fig. 21 on page 23).

1st and 2nd stage fan damper valve

See "Servomotor adjustment" on page 31.

6.4 Burner start-up (light oil)

Feed electricity to the burner via the disconnecting switch on the boiler panel.

Close the thermostats/pressure switches and turn the switch in Fig. 36 to position “**MAN**”.

As soon as burner starts, check the fan rotation direction through the flame inspection window.

DANGER

Check that the lamps or testers connected to the solenoid valves, or the pilot lights on the solenoid valves, indicate that no voltage is present. If they indicate the presence of voltage, stop the burner **immediately** and check the electric connections.

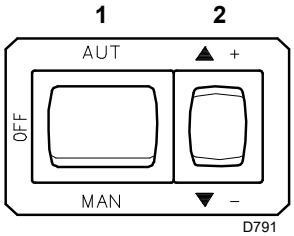

Fig. 36

6.5 Burner ignition (light oil)

Turn switch 1)(Fig. 36) to "MAN” position.

During the first firing, during the passage from the 1st to the 2nd stage, there is a momentary lowering of the fuel pressure caused by the filling of the 2nd stage nozzle.

This lowering of the fuel pressure can cause the burner to lockout and can sometimes give rise to pulsations.

Once the following adjustments have been made, the firing of the burner must generate a noise similar to the noise generated during operation.

6.6 Burner adjustment (light oil)

It is recommended to adjust first the light oil burner and then the gas burner.

ATTENTION

Carry out the fuel change with burner off.

6.6.1 Ignition

Put the switch 1)(Fig. 27) on "MAN".
During the first firing, during the passage from the 1st to the 2nd stage, there is a momentary lowering of the fuel pressure caused by the filling of the 2nd nozzle tubing. This lowering of the fuel pressure can cause the burner to lockout and can sometimes give rise to pulsations. When first ignited, the burner should make a noise to show it is operating.

6.6.2 Operation

The optimum calibration of the burner requires an analysis of the flue gases at the boiler outlet and interventions on the following points.

- **1st and 2nd stage nozzles**
  See information on page 21.
- **Combustion head**
  The adjustment of the head that has already been carried out as on page 23 does not require any modifications unless the burner output in the 2nd stage is changed.
- **Pump pressure:**
  In order to change pump pressure, act on screw 5) (Fig. 26).
  See information on page 26.
- **1st and 2nd stage fan damper**
  See servomotor adjustment on page 31.

6.7 Adjustments prior to ignition (gas)

Combustion head adjustment is already described on page 23.

In addition, the following adjustments must also be made:

- Slowly open the manual valves situated upstream of the gas train.
- Adjust the minimum gas pressure switch to the start of the scale.
- Adjust the maximum gas pressure switch to the end of the scale.
- Adjust the air pressure switch to the start of the scale.
- Purge the air from the gas line.
  We recommend using a plastic tube routed outside the building and to purge air until gas is smelt.
- Fit a U-type pressure gauge or a differential pressure gauge (Fig. 37), with socket (+) on the gas pressure of the pipe coupling and (-) in the combustion chamber.
  The manometer readings are used to calculate MAX burner output using the Tab. L.
- Connect two lamps or testers to the two gas line solenoid valves to check the exact moment in which voltage is supplied.
  This operation is not required if each of the two solenoid valves is equipped with a pilot light that signals voltage passing through.

CAUTION

Before starting up the burner, it is good practice to adjust the gas train so that ignition takes place in conditions of maximum safety, i.e. with gas delivery at the minimum.

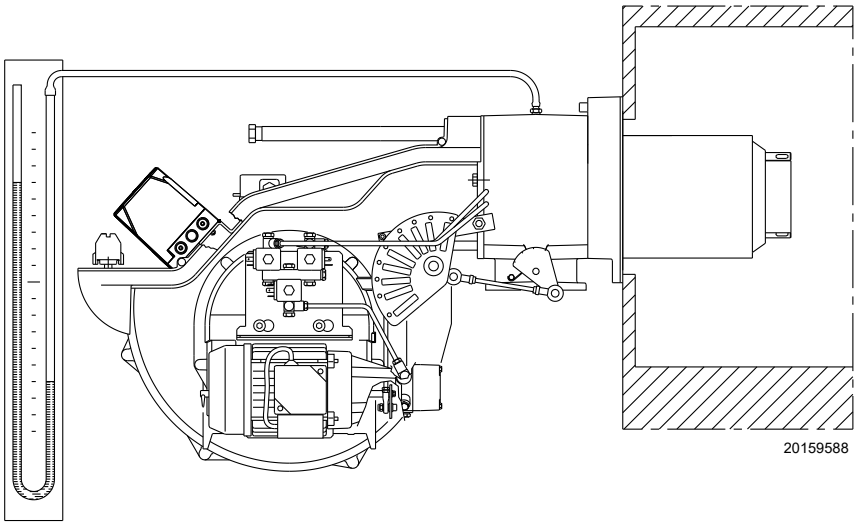

Fig. 37

6.8 Burner start-up (gas)

Turn off the remote controls and set the switch 1)(Fig. 36) to “MAN”.

As soon as the burner starts, check the direction of rotation of the fan impeller, looking through the flame inspection window 22) (Fig. 6).

Check that the lamps or testers connected to the solenoid valves, or the pilot lights on the solenoid valves, indicate that no voltage is present.
If they indicate the presence of voltage, stop the burner immediately and check the electric connections.

6.9 Burner ignition (gas)

It is recommended to adjust first the light oil burner and then the gas burner.

ATTENTION

Carry out the fuel change with burner off.

Having completed the checks indicated in the previous heading, ignition of the burner should be achieved.
If the motor starts but the flame does not appear and the control box goes into lockout, reset and wait for a new ignition attempt.

If ignition is still not achieved, it may be that gas is not reaching the combustion head within the safety time period of 3 seconds. In this case, increase gas ignition delivery.

The arrival of gas to the sleeve is indicated by the U-type pressure gauge (Fig. 37).

Once ignition has taken place, proceed with burner global calibration operations.

6.10 Burner adjustment (gas)

The optimum adjustment of the burner requires an analysis of flue gases at the boiler outlet.
Adjust in sequence:
1 Ignition output
2 Maximum output
3 Minimum output
4 Intermediate outputs between the two
5 Air pressure switch
6 Maximum gas pressure switch
7 Minimum gas pressure switch

6.10.1 Ignition output

According to standard EN 676.

Burners with MAX output up to 120 kW

Ignition can occur at the maximum operation output level. Example:
- max. operation output: 120 kW
- max. ignition output: 120 kW

Burners with MAX output above 120 kW

Ignition must occur at a lower output than the max. operation output.
If ignition output does not exceed 120 kW, no calculations are required. If ignition output exceeds 120 kW, the regulatory standard sets that the value be defined according to the control box safety time "ts":
for "ts" = 3s, ignition output must be equal to or lower than 1/3 of max. operation output.

Example

MAX operation output of 600 kW.
Ignition output must be equal to or lower than:
- 300 kW with ts = 2 s.
- 200 kW with ts = 3 s.

In order to measure the ignition output:
➤ disconnect the plug-socket 1)(Fig. 7 on page 14) on the ionisation probe cable (the burner will ignite and then go into lockout after the safety time has elapsed);
➤ perform 10 consecutive ignitions with lockouts;
➤ read the quantity of burned gas on the meter:
this quantity must be equal to, or lower than, the quantity given by the formula:

$$\frac{\textbf{Sm}^3\textbf{/h}\ \text{(max. burner delivery)}}{\textbf{360}}$$

Example for G 20 gas (9.45 kWh/Sm^3):

Max. operation output: 600 kW corresponding to 63.5 Sm^3/h.

After 10 ignitions with a lockout, the delivery indicated on the meter must be equal to or lower than: 63.5: 360 = 0.176 Sm^3

Air adjustment

The air is adjusted by changing the angle of cam III) (Fig. 35 on page 31) and by using the selector 2)(Fig. 36).
To adjust the cam of the servomotor, see Fig. 35.

6.10.2 Maximum output

The MAX output must be set within the firing rate indicated in Fig. 3 on page 11.

In the above instructions we left the burner running at the MIN output.
Now press the “increase output” button 2)(Fig. 36), and keep it pressed until the servomotor has opened the air damper and the gas butterfly valve.

Adjustment of gas delivery

Measure the gas delivery on the meter.

A rough indication can be obtained from Tab. L on page 28, just read the gas pressure on the "U" pressure gauge (see Fig. 37 on page 33) and follow the indications.
➤ If delivery needs to be reduced, diminish outlet gas pressure; if it is already very low, slightly close the VR adjustment valve.
➤ If delivery needs to be increased, increase the adjuster outlet gas pressure.

Air adjustment

The air is adjusted by varying the angle of cam I) (Fig. 35 on page 31) and by using the selector 2)(Fig. 36 on page 32).
To adjust the cam of the servomotor, see Fig. 35.

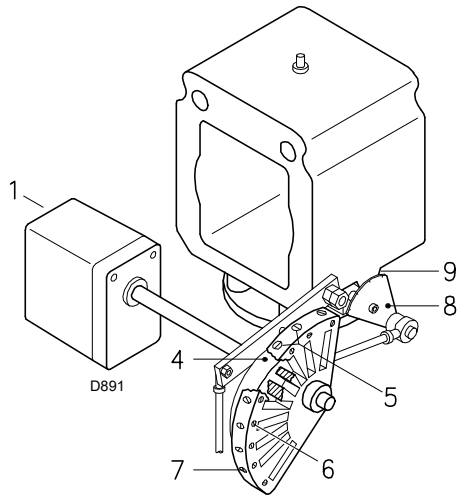

Fig. 38

Key (Fig. 38)
1 Servomotor
2 Servomotor 1) - cam 4): fastened
3 Servomotor 1) - cam 4): unfastened
4 Variable profile cam
5 Screws for adjusting the adjustable profile
6 Screws for fixing adjustment
7 Screws for adjusting the end profile
8 Gas butterfly valve graduated sector
9 Index of graduated sector 8

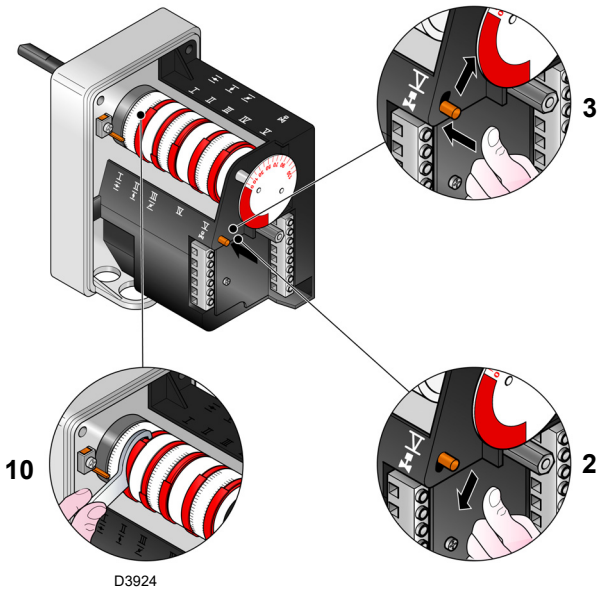

Fig. 39

6.10.3 Minimum output

MIN output must be selected within the firing rate range indicated on Fig. 3 on page 11. Press button 2)(Fig. 39) “Output decrease” and keep it pressed until the servomotor reaches (Fig. 39) the factory adjustment.

Air adjustment

Progressively adjust the end profile of the mechanical cam 4) (Fig. 38), using the screws 5)(Fig. 38).

For example, calibrate the minimum output to 800 kW, check the emissions and if necessary increase or decrease the opening of the air damper (“Air adjustment” on page 35).

Bring the output to 800 kW using the screws 5) of the mechanical cam (Fig. 38) and check the emissions.

Adjustment of gas delivery

The air is adjusted by changing the angle of cam III) of the servomotor (Fig. 39) and by using the selector 2)(Fig. 39).
To adjust the cam of the servomotor, see Fig. 39.

NOTE:
The servomotor follows the adjustment of cam III only when the angle of the cam is reduced.
If it is necessary to increase the angle of the cam, you must first increase the angle of the servomotor by means of the “output increase” key, then increase the angle of cam III, and finally bring the servomotor to the position of MIN output, with the “Output reduction” key.

To adjust cam III, see Fig. 39.

6.10.4 Intermediate outputs

Adjustment of gas delivery

No adjustment is required

Air adjustment

After adjusting the maximum and minimum output of the burner, carry out air adjustment on higher intermediate positions of the servomotor.
The passage from one position to the next one is obtained by pressing the button 2) on the symbol (+) or (-) (Fig. 36). Press button 2)(Fig. 36) “Output increase” briefly so that the servomotor rotates by about 20°, see servomotor graduated index Fig. 39 and air damper graduated index 5) (Fig. 38 on page 34).

Screw or unscrew the screw 5) of the mechanical cam (Fig. 38 on page 34) to increase or decrease the gas output so as to adjust it to the corresponding air output, to obtain optimal combustion.

Proceed in the same way with the other screws.

ATTENTION

Take care that the cam profile variation is progressive.

Switch off the burner using switch 1)(Fig. 36), OFF position, release the mechanical cam I)(Fig. 38) to separate the gears of the servomotor, pressing and moving downwards button 3)(Fig. 39), then manually rotate the mechanical cam I)(Fig. 39) backwards and forwards a few times to check that the movement is smooth and without any hindrance.

ATTENTION

It is recommended that the mechanical cam 5)(Fig. 38) be bound again to the servomotor by shifting button 3)(Fig. 39) upwards.

As far as is possible, try not to move those screws at the ends of the mechanical cam that were previously adjusted for the opening of the gas butterfly valve to MAX and MIN output.

NOTE:
Once “MAX - MIN - INTERMEDIATE” outputs have been adjusted, recheck the ignition: its noise must be equal to the one of the following operation.
If you notice any sign of pulsations, reduce the ignition stage delivery.

6.11 Change of fuel

There are two change of fuel options:
1 with selector 10)(Fig. 7 on page 14);
2 with a remote selector connected to the main terminal board. Positioning the selector 10)(Fig. 7 on page 14) to “**EXT**” activates the remote selection of the fuel.

ATTENTION

Change the fuel only when the burner is off.

6.12 Pressure switch adjustment

6.12.1 Air pressure switch

Adjust the air pressure switch after performing all other burner adjustments with the air pressure switch set to the start of the scale (Fig. 40).

With the burner operating at MIN output, increase adjustment pressure by slowly turning the relevant knob clockwise until the burner locks out.

Then turn the knob anticlockwise by about 20% of the set point and repeat burner start-up to ensure it is correct.

If the burner locks out again, turn the knob slightly anticlockwise.

ATTENTION

In conformity with the standard, the air pressure switch must prevent the air pressure falling below 80% of the adjusted value and the CO in the flue gases exceeding 1% (10,000 ppm).
To check this, insert a combustion analyser in the flue, slowly reduce the burner air setting (for example with a piece of cardboard) and verify that the burner locks out before the CO value in the flue gases exceeds 1%.

The incorporated air pressure switch can work in a 'differential' mode if connected with two pipes. If a strong depression in the combustion chamber during the pre-purging phase does not allow the air pressure switch to switch, this can be obtained by applying a second tube between the air pressure switch and the suction inlet of the fan. In this way, the pressure switch will work in differential mode.

ATTENTION

The use of the air pressure switch with differential operation is only allowed in industrial applications and where standards enable the air pressure switch to control only fan operation, without any reference to CO limit.

6.12.2 Maximum gas pressure switch

Adjust the maximum gas pressure switch (Fig. 41) after making all other burner adjustments with the maximum gas pressure switch set to the end of the scale.

To calibrate the maximum gas pressure switch, open the tap and then connect a pressure gauge to its pressure test point.

The maximum gas pressure switch must be regulated to a value no higher than 30% of the measurement read on the gauge when the burner is working at maximum output.

After making the adjustment, remove the pressure gauge and close the tap.

6.12.3 Minimum gas pressure switch

The purpose of the minimum gas pressure switch is to prevent the burner from operating in an unsuitable way due to too low gas pressure.

Adjust the minimum gas pressure switch (Fig. 42) after having adjusted the burner, the gas valves and the gas train stabiliser. With the burner operating at maximum output:

- install a pressure gauge downstream of the gas train stabiliser (for example at the gas pressure test point on the burner combustion head);
- choke slowly the manual gas cock until the pressure gauge detects a decrease in the pressure read of about 0.1 kPa (1 mbar). In this phase, verify the CO value which must always be less than 100 mg/kWh (93 ppm).
- Increase the adjustment of the gas pressure switch until it intervenes, causing the burner shutdown;
- remove the pressure gauge and close the cock of the gas pressure test point used for the measurement;
- open completely the manual gas cock.

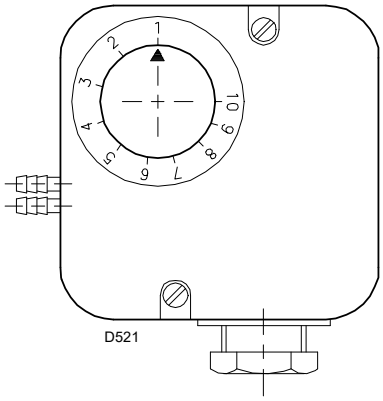

Fig. 40

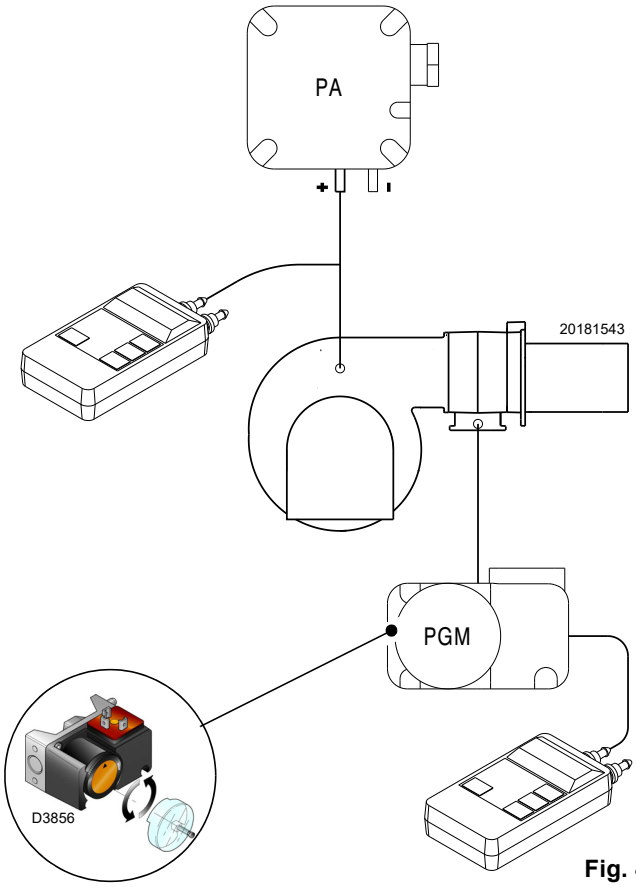

Fig. 41

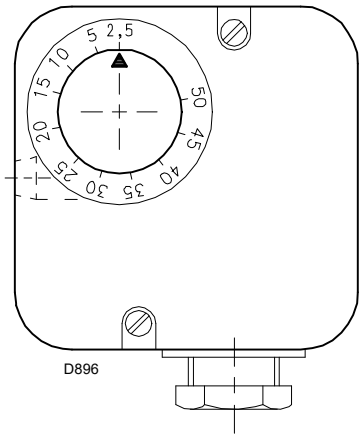

Fig. 42

ATTENTION

1 kPa = 10 mbar

6.13 Operation sequence of the burner (gas)

6.13.1 Burner start-up

- 0s: Control remote control TL closes.
  Fan motor start-up.
- 6s: Servomotor start-up: turn to the right by 130°, i.e. until the contact intervenes on cam I (Fig. 35 on page 31). The air damper is positioned to MAX output.
- 48s: Pre-purging stage with MAX output air delivery. Duration 32 s.
- 80s: The servomotor turns to the left to reach the angle set on cam III (Fig. 35 on page 31) for the MIN output.
- 112s: The air damper and the gas butterfly valve reach the MIN output position (with cam III) (Fig. 35 on page 31) at 30°.
- 113s: Ignition electrode strikes a spark.
- 119s: The safety valve VS and the adjustment valve VR open (quick opening). The flame ignites with a small output - point A.
  The output gradually increases, and the VR valve slowly opens, until the MIN output is reached - point B.
- 122s: The spark goes out.
- 135s: The start-up cycle ends.

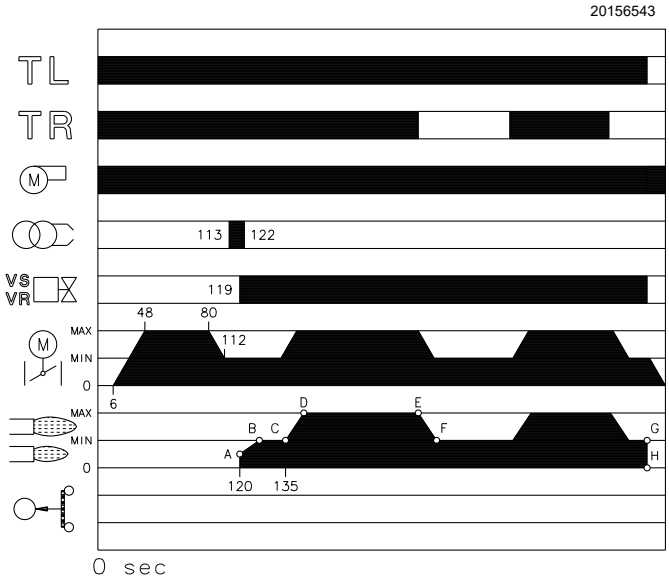

Fig. 43

6.13.2 Steady state operation

Burner without output regulator RWF

At the end of the start-up cycle, the servomotor control switches to TR remote control that controls the pressure or temperature in the boiler, point C. (The electric control box carries on checking the presence of the flame and the correct position of the air and gas maximum pressure switches).

- If the temperature or pressure is low (so the TR remote control is closed), the burner progressively increases the output up to the MAX value (section C-D).
- If the temperature or pressure then increases until the TR opens, the burner progressively decreases its output to the MIN value (section E-F). And so on.
- The burner locks out when the heat request is less than the heat supplied by the burner at MIN output, (section G-H). The TL remote control opens, the servomotor returns to angle 0° limited by the contact of cam II (Fig. 35 on page 31). The air damper closes completely to reduce heat losses to a minimum.

With each change of output, the servomotor automatically modifies the gas output (butterfly valve) and the air flow rate (fan damper).

Burner with output regulator RWF

See the manual supplied with the regulator.

6.13.3 Ignition failure

If the burner does not ignite, it locks out within 3s after the gas valve opens, and the post-purging phase starts lasting 17s, i.e. 122s from TL closure.

Burner flame goes out during operation

If the flame goes out during operation, the burner will lock out within 1s.

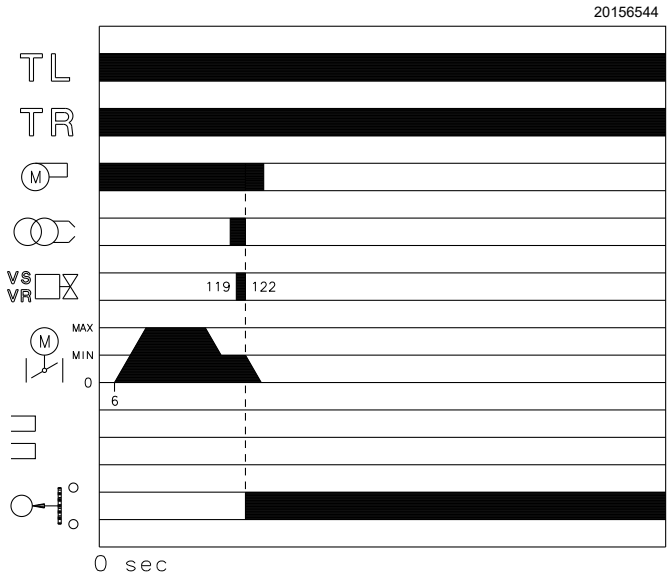

Fig. 44

6.14 Final checks (with burner operating)

➤ Open the thermostat/pressure switch TL ➤ Open the thermostat/pressure switch TS	⇨	The burner must stop
➤ Turn the knob of the gas maximum pressure switch to the minimum end of scale position ➤ Turn the air pressure switch knob to the maximum end of scale position	⇨	The burner must stop in lockout
➤ Turn off the burner and cut off the power ➤ Disconnect the minimum gas pressure switch connector	⇨	The burner must not start
➤ Disconnect flame detection sensor electrical connections	⇨	The burner must stop in lockout due to ignition failure
➤ Obscure the flame sensor	⇨	The burner must stop in lockout due to ignition failure
➤ Turn off the burner and cut off the power ➤ Disconnect the maximum gas pressure switch connector	⇨	The burner must not start
➤ Turn off the burner and cut off the power ➤ Disconnect the minimum oil pressure switch connector	⇨	The burner goes into lockout because the oil valves do not open

Tab. M

ATTENTION

Make sure that the mechanical locking systems on the adjustment devices are fully tightened.

7 Maintenance

7.1 Notes on safety for the maintenance

The periodic maintenance is essential for the good operation, safety, yield and duration of the burner.

It allows you to reduce consumption and polluting emissions and to keep the product in a reliable state over time.

DANGER

The maintenance interventions and the calibration of the burner must only be carried out by qualified, authorised personnel, in accordance with the contents of this manual and in compliance with the standards and regulations of current laws.

Before carrying out any maintenance, cleaning or checking operations:

DANGER

Disconnect the electrical supply from the burner by means of the system main switch.

DANGER

Close the fuel shut-off valve.

Wait for the components in contact with heat sources to cool down completely.

7.2 Maintenance programme

7.2.1 Maintenance frequency

The gas combustion system should be checked at least once a year by a representative of the manufacturer or another specialised technician.

7.2.2 Safety test - with no gas supply

To perform commissioning in safety conditions, it is very important to check correct wiring between gas valves and burner.

For this purpose, after checking that connections comply with the burner wiring diagrams, it is necessary to carry out a start-up cycle with gas cock closed (dry test).

1 The manual gas valve must be closed using the locking/ unlocking device (“Lock-out / tag out” procedure).
2 Ensure that burner limit electrical contacts are closed
3 Ensure that minimum gas pressure switch contact is closed
4 Try to start the burner

The start-up cycle must occur according to the following steps:

– Fan motor start-up for pre-purging
– Gas valve leak detection control, if applicable
– Pre-purging completion
– Achievement of the ignition point
– Power supply of the ignition transformer
– Supply of gas valves

As gas is closed, the burner cannot ignite and its control box will switch to stop or safety lockout condition.

The actual supply of gas valves can be checked by inserting a tester; some valves are equipped with lights (or closing/opening position indicators) that activate as soon as they are powered.

ATTENTION

IF POWER SUPPLY OF GAS VALVES OCCURS IN UNEXPECTED MOMENTS, DO NOT OPEN THE MANUAL VALVE, DISCONNECT POWER SUPPLY, CHECK WIRINGS, CORRECT THE ERRORS AND CARRY OUT THE WHOLE TEST AGAIN.

7.2.3 Checking and cleaning

The operator must use the required equipment during maintenance.

Combustion

Carry out an analysis of the combustion flue gases.
Significant differences with respect to the previous measurements indicate the points where most care should be exercised during maintenance.

Combustion head

Open the burner and make sure that all components of the combustion head are in good condition, not deformed by the high temperatures, free of impurities from the surroundings and correctly positioned.

Burner

Check for excess wear or loose screws in the mechanisms controlling the air damper and the gas butterfly valve.
Also make sure that the screws securing the electrical leads in the burner terminal block are fully tightened.
Clean the outside of the burner, taking special care with the articulated couplings and the cam 4)(Fig. 38 on page 34).

Fan

Check to make sure that no dust has accumulated inside the fan or on its impellers, as this condition will cause a reduction in the air flow rate and provoke polluting combustion.

Servomotor

Release cam 4)(Fig. 38) from the servomotor, by pressing and shifting button 3)(Fig. 39) to the right. Manually rotate it backwards and forwards to make sure it moves smoothly. Now engage the cam again by shifting the button 2)(Fig. 39) to the left.

Boiler

Clean the boiler as indicated in its accompanying instructions in order to maintain all the original combustion characteristics intact, especially: the flue gas temperature and combustion chamber pressure.

Flame inspection window

Clean the glass of the flame inspection window (Fig. 45).

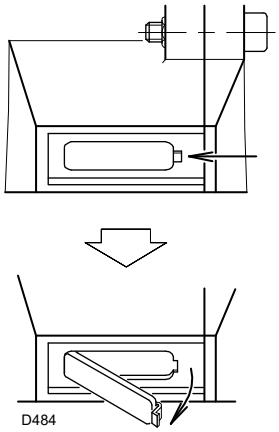

Fig. 45

7.2.4 Flame presence check

Check the level of the flame detection signal with the “Check Mode” function from the flame control: LEDs from 2 to 6 indicate the flame signal level, respectively.
see “LED indicator and special function” on page 43

Check Mode

With burner flame on:

- ➤ hold the reset button on the flame control pressed for at least 3 sec.;
- ➤ the button colour will change from green to yellow;
- ➤ each operating status signalling LED will be compared to 20% of the maximum brightness;
- ➤ press the reset button again (<0.5sec) to reset the standard operation of the signalling LEDs.

7.2.5 Safety components

The safety components must be replaced at the end of their life cycle indicated in Tab. N.
The specified life cycles do not refer to the warranty terms indicated in the delivery or payment conditions.

Safety component	Life cycle
Flame control	10 years or 250.000 operation cycles
Flame sensor	10 years or 250.000 operation cycles
Gas valves (solenoid)	10 years or 250.000 operation cycles
Pressure switches	10 years or 250.000 operation cycles
Pressure adjuster	15 years
Servomotor (electronic cam) (if present)	10 years or 250.000 operation cycles
Oil valve (solenoid)(if present)	10 years or 250.000 operation cycles
Oil regulator (if present)	10 years or 250.000 operation cycles
Oil pipes/ couplings (metallic) (if present)	10 years
Flexible hoses (if present)	5 years or 30.000 pressurised cycles
Fan impeller	10 years or 500.000 start-ups

Tab. N

LIGHT OIL OPERATION

Filters (Fig. 46)
Check the filtering baskets on line 1) and at nozzle 2) present in the system.
Clean or replace if necessary.
If rust or other impurities are observed inside the pump, use a separate pump to lift any water and other impurities that may have deposited on the bottom of the tank.

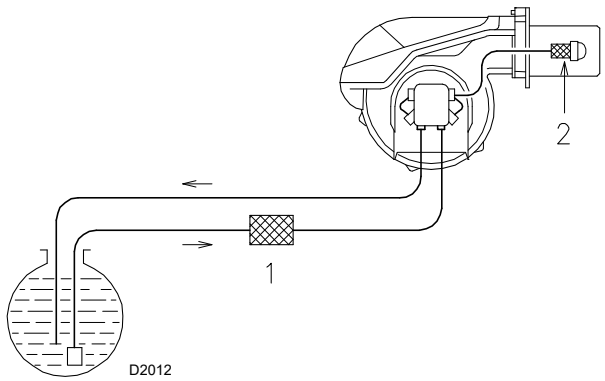

Fig. 46

Pump
The delivery pressure must comply with Tab. K on page 26.
The depression must be less than 0.45 bar.
Unusual noise must not be evident during pump operation.
If the pressure is unstable, or the pump runs noisily, the flexible hose must be detached from the line filter and the fuel must be sucked from a tank located near the burner. This measure permits the cause of the anomaly to be traced to either the suction piping or the pump.
If the problem lies in the suction line, check the filter is clean and that air is not entering the piping.

Nozzles
It is advisable to replace nozzles once a year during periodical maintenance.
Do not clean the nozzle openings.

Flexible hoses
Check to make sure that the hoses are still in good condition.

Fuel tank
Approximately every 5 years, suck any water on the bottom of the tank using a separate pump.

Combustion
If the combustion values measured before starting maintenance do not comply with applicable Standards or do not indicate efficient combustion, consult the table below or contact our Technical Support Service to implement the necessary adjustments.

EN 267	Air excess		
	Max. output $\lambda \leq 1.2$		Min. output $\lambda \leq 1.3$
Theoretical max CO_2 0 % O_2	CO_2 % Calibration		CO mg/kWh
	$\lambda = 1.2$	$\lambda = 1.3$	
15.2	12.6	11.5	≤ 100

GAS OPERATION

Gas leaks
Make sure that there are no gas leaks on the pipe between the gas meter and the burner.

Gas filter
Change the gas filter when it is dirty.

Combustion
If the combustion values measured before starting maintenance do not comply with applicable Standards or do not indicate efficient combustion, consult the table below or contact our Technical Support Service to implement the necessary adjustments.

EN 676		Air excess		
		Max. output $\lambda \leq 1.2$		Min. output $\lambda \leq 1.3$
GAS	Theoretical max CO_2 0 % O_2	Calibration CO_2 %		CO mg/kWh
		$\lambda = 1.2$	$\lambda = 1.3$	
G 20	11.7	9.7	9.0	≤ 100
G 25	11.5	9.5	8.8	≤ 100
G 30	14.0	11.6	10.7	≤ 100
G 31	13.7	11.4	10.5	≤ 100

7.3 Opening the burner

DANGER

Disconnect the electrical supply from the burner by means of the system main switch.

DANGER

Close the fuel shut-off valve.

Wait for the components in contact with heat sources to cool down completely.

- ➤ Loosen the screws 1) and remove the hood 2)(Fig. 47).
- ➤ Disconnect the light oil pipes 7)(Fig. 47).
- ➤ Disengage the articulated coupling 8) from the graduated sector 9).
- ➤ Remove the screws 10) from the two slide bars 4).
- ➤ Assemble the two extensions on the sliding bars 4).
- ➤ Refit the screws 10) on the extensions.
- ➤ Remove the screws 3) and move the burner backwards by about 100 mm on the slide bars 4)(Fig. 47).
  Disconnect the electrode cables, then completely retract the burner.

At this point it is possible to extract the inner part 5) after having removed the screw 6)(Fig. 47).

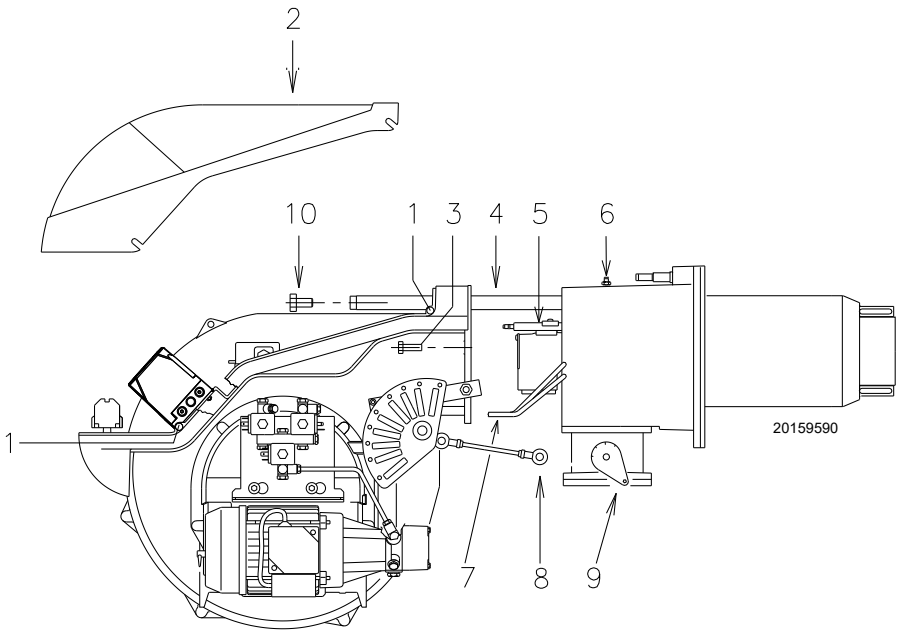

Fig. 47

7.4 Closing the burner

Refit following the steps described but in reverse order; refit all burner components as they were originally assembled.

After carrying out maintenance, cleaning or checking operations, reassemble the cover and all the safety and protection devices of the burner.

8 LED indicator and special function

8.1 Description of LED lamps

S9740	Fan	It turns on when the fan motor is powered (T6) and blinks when RUN/CHECK switch is set to “CHECK” during damper movement phases, PTFI AND MTFI.
S9741	Damper open	It blinks when the air damper is moving towards the maximum opening position until the position-reached feedback sent by the servomotor is received, then it stays steadily on for the time set by the flame control.
S9742	Damper closed	If blinks when the air damper is moving towards the minimum opening position until the position-reached feedback sent by the servomotor is received, then it stays steadily on until the end of the pre-purging time.
S9743	Auto	It indicates that the burner is ready for the output modulation.
S9744	Ignition	It blinks during the ignition phase (1st safety time) and stays steadily on during the MTFI.
	Flame	It blinks during the first safety time and stays steadily on if the flame detection has been correctly performed.
S9746	Alarm	It turns on in red when a lock-out condition occurs. Together with the other indicators, it indicates the type of fault during the lock-out phase. Together with the other LEDs, it indicates the operating status during the normal cycle.

Tab. O

T = Terminal
PTFI = Pilot ignition attempt
MTFI = Ignition attempt with main fuel valve

8.2 Check mode function

By means of the reset button on-board the flame control, it is possible to use a control function during start-up phases. (pre-purging, ignition, 1st safety time and 2nd safety time).
This function, indicated as CHECK MODE, is designed to facilitate checking the phases of the burner and of the safety devices monitored by the flame control.
This function is particularly useful during the burner first commissioning or during maintenance.

To enable the check mode function:

- keep the reset button pressed, see “Operation sequence of the burner (gas)” on page 37, for more details, for at least 3 seconds, the status LED changes from green to yellow to signal that the control device is in check mode;
- the control device locks out during pre-purging, after a time-out of max 30 minutes the flame control will automatically exit the check mode function;
- check mode has a 2 minute timeout during the 2nd safety time. When it ends, the flame control goes back to the normal operating status;
- check mode has a 2 minute timeout during the MTFI status. When it ends, the flame control goes back to the normal operating status;
- during the check mode 1st or 2nd safety time, the flame signal level can be indicated by the 5 central LEDs on the flame control central panel, which turn on proportionally.
  Each lit LED (starting from the flame LED) represents 20% of the signal power.
  To exit the check mode function, press the reset button; the flame control will go back to the normal operating mode.

8.3 Flame control lock-out or emergency stop condition

The RFGO control device can be locked out (emergency stop) at any time during the operating cycle and unlocked when already locked (lock-out) by simply pressing the key on the front panel or by means of the terminal T21 on the support base.

8.4 LED lamps: burner operating status

OPERATING STATUSES INDICATED BY LEDS DURING NORMAL OPERATION AND CHECK MODE

Operation LED ● = ON	Fan	Damper open	Damper closed	Modulation	Ignition	Flame	Status
Icon	S9740	S9741	S9742	S9743	S9744	S9745	S9746
Power OFF/ON							OFF
Not ready/ Diagnostics							Green
Standby			●				Green
Servomotor movement (Note 3)	●	OFF Flashing ● ⟺	● Flashing OFF				Green
Waiting for closing	Green blinking						Green
OPEN (before ignition)	●	●					Green
Minimum (before ignition)	●		●				Green
Ignition	●		●		●		Green
PTFI	●		●		●	Green blinking	Green
MTFI	●		●			●	Green
Active modulation	●			●		●	Green
Minimum output position	●		●			●	Green
With flame present	●	●				●	Green
Economy mode	●		●				Green
Check during maximum opening phase	Flashing	●					Yellow
Check during minimum closing phase	Flashing		●				Yellow
Check during ignition phase with pilot PTFI	Flashing	● Note 1	● Note 1	● Note 1	● Note 1	● Note 1	Yellow
Check during ignition phase with main fuel valve MTFI	Flashing	● Note 1	● Note 1	● Note 1	● Note 1	● Note 1	Yellow
Fault/lock-out	● Note 2	● Note 2	● Note 2	● Note 2	● Note 2	● Note 2	Red
End of the cycle	●		●	●			Green

Tab. P

1. LEDs form a progress bar which indicates the Flame Signal Power in order to orientate the sensors during commissioning (LEDs “Grow” upwards, moving away from the Status at 20% intervals of flame power.)
2. LEDs indicate the error or lock-out code for troubleshooting.
3. LEDs change from ON to BLINKING to OFF showing the servomotor movement control until the position-reached feedback is received see “Problems - Causes - Remedies signalled by LED indicators” on page 45“.

9 Problems - Causes - Remedies signalled by LED indicators

When an emergency stop occurs, the control device LEDs indicate the cause of the stop.
The terminal T3 is not powered.
The device operating status is internally memorised in case of any lack of power supply.

The device lock-out condition can be caused by pressing (<1sec.) the reset button on the flame control front side or through the remote reset - terminal T21 on the base.
Since the reset button is very sensitive, do not press it strongly during the reset operation.

Unlocking the control device

The RFGO control device can be reset in two ways: reset button and remote reset terminal.
The remote reset must be a normally open connected button between T21 and flame control power supply voltage (see illustrative diagrams):

- the reset is performed when a faulty condition is detected by the flame control.
- Press the reset button to reset the system after a lock-out.
- Pressing the reset button during operation will cause an emergency stop.
- The reset or emergency stop condition can be obtained also by using the remote reset with the same modalities.
- The number of reset attempts is limited to a maximum of 5 within 15 minutes.

Error / RFGO LED lock-out Codes

During an alarm condition, the status LED becomes steady red.
The remaining LEDs turn on according to a coded sequence which identifies the lock-out cause.
The following table shows the different LED Lock-out codes.

ATTENTION

The device described in this manual can cause material problems, severe injuries or death.

It is the owner or user's responsibility to make sure that the equipment described is installed, used and commissioned in compliance with the requirements provided both by national and local law. The lock-out condition indicates the presence of a fault which occurred during the operating cycle or during stand-by mode.
Before performing an unlock attempt, it is necessary to restore the original optimal operating conditions.

ATTENTION

Thermal unit's operation, maintenance and troubleshooting interventions must be carried out by trained personnel.
The persons who solve lock-out problems or reset the control device must observe the error codes to solve the problems described in this product technical data sheet.

It is not admitted to tamper with or act on the system or control in a way that could compromise the product safety or warranty.
Any tests on safety devices or on loads, such as fan motor, valves, igniter, flame sensors, must be performed with the shut-off valves closed and by qualified personnel.

Do not by-pass nor exclude the safety devices connected to the flame control.
Failure to observe these guidelines will exclude any liability.

ATTENTION

The regulation prohibits the system from allowing more than 5 remote reset attempts within a 15 minute time window.
If more than 5 attempts are performed without solving the lock-out, the system will prevent the user to perform further remote resets and force him/her to wait for the 15 minutes to elapse.
The remote reset operation will be restored at the end of the waiting time.
It is recommended that qualified personnel evaluate the lock-out condition and implement the solution which is suitable for the fault to be solved.

Error / RFGO LED lock-out codes

No.	Faults	LED 1	LED 2	LED 3	LED 4	LED 5	LED 6	LED 7
	Operation LED ● = ON	Fan	Open damper	Closed damper	Auto	Ignition	Flame	Status
	Icon	S9740	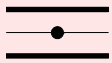 S9741	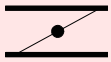 S9742	S9743	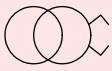 S9744	S9745	S9746
1	Post-diagnostics fault	●						Red
2	Local reset		●					Red
3	Combustion air fan fault	●	●					Red
4	Supervisor processor diagnostics fault			●				Red
5	FR- NO Flame at the end of the 2nd safety time (MTFI)	●		●				Red
6	FR: internal circuit fault		●	●				Red
7	Internal communication fault	●	●	●				Red
8	Remote reset				●			Red
9	FR: internal fault	●			●			Red
10	Main processor fault		●		●			Red
11	Data memory test fault	●	●		●			Red
12	Data memory test fault			●	●			Red
13	Mains voltage or frequent fault	●		●	●			Red
14	Internal processor fault		●	●	●			Red
15	Internal processor fault	●	●	●	●			Red
16	No flame: 1st safety time (PTFI)	●				●		Red
17	Wiring fault		●			●		Red
18	Safety relay fault	●	●			●		Red
19	Combustion airflow switch fault in the rest position			●		●		Red
20	UV: no flame at the end of the 2nd safety time (MTFI)	●		●		●		Red
21	Safety relay fault		●	●		●		Red
22	Supervisor processor fault	●	●	●		●		Red
23	Supervisor memory test fault				●	●		Red
24	Flame loss during the operation (AUTO)	●			●	●		Red
25	Supervisor processor data memory fault		●		●	●		Red
26	Supervisor processor internal fault	●	●		●	●		Red
27	Not used							
28	Not used							
29	Operating temperature out of range		●	●	●	●		Red
30	Code memory fault	●	●	●	●	●		Red
31	FR: external short circuit						●	Red
32	Check mode timeout (manual)	●					●	Red
33	False flame in stand-by mode		●				●	Red
34	Not used							
35	Internal processor timeout			●			●	Red
36	Internal processor timeout	●		●			●	Red
37	Combustion air check timeout		●	●			●	Red
38	Internal processor timeout	●	●	●			●	Red
39	Internal processor timeout				●		●	Red
40	Internal hardware fault	●			●		●	Red
41	Internal hardware fault		●		●		●	Red
42	Main processor fault	●	●		●		●	Red
43	Supervisor processor fault			●	●		●	Red
44	Supervisor processor timeout	●		●	●		●	Red
45	Off-specification mains voltage		●	●	●		●	Red
46	Off-specification mains voltage	●	●	●	●		●	Red

No.	Faults	LED 1	LED 2	LED 3	LED 4	LED 5	LED 6	LED 7
47	UV: Internal fault					●	●	Red
48	Supervisor processor fault	●				●	●	Red
49	Main processor fault		●			●	●	Red
50	Ignition feedback fault	●	●			●	●	Red
51	Pilot feedback fault			●		●	●	Red
52	Piloted valve feedback fault	●		●		●	●	Red
53	Actuator feedback waiting time expired		●	●		●	●	Red
54	Direct ignition valve feedback fault	●	●	●		●	●	Red
55	Internal processor fault				●	●	●	Red
56	UV: false flame during operation			●	●	●	●	Red
57	FR: false flame during operation	●		●	●	●	●	Red
58	T8 inlet fault		●	●	●	●	●	Red
59	Internal hardware fault	●			●	●	●	Red
60	Local reset fault	●	●	●	●	●	●	Red
61	Open POC fault		●		●	●	●	Red
62	UV: strong UV flame fault	●	●		●	●	●	Red
63	Internal hardware fault					●		Red

Tab. Q

Fault explanation

No.	Faults	Cause	Solution
1	Post-diagnostics fault	Initial power diagnostics fault Make sure that the status of inlets and outlets is correct upon ignition	Check T12, T13 and T14
2	Local reset	The user started the manual reset or the reset switch is faulty	Check T21 inlet or reset for normal operation
3	Combustion air fan fault	No Air Check signal (T14) during the bleed cycle or Air Check signal loss during the burner operation	Check the fan or the air pressure switch
4	Supervisor processor diagnostics fault	The system detected the presence of voltage on T16, T17, T18 or T19 at the wrong moment or there is no voltage when necessary	Check the wiring and make sure that the system is operating on a single-phase line (50/60Hz)
5	FR- No flame at the end of the 2nd safety time (MTFI)	No flame at the end of the second safety time	Inspect the system, check the gas pressure, inspect the flame detection electrode, check the wiring, etc.
6	FR: internal circuit fault	Internal fault	Replace the control device
7	Internal communication fault	Internal fault	Replace the control device
8	Remote reset	The user pressed the remote reset button or the reset switch is discontinuous/dynamic	Check the remote switch
9	FR: internal fault	Internal fault	Replace the control device
10	Main processor fault	Internal fault	Replace the control device
11	Data memory test fault	Internal fault	Replace the control device
12	Data memory test fault	Internal fault	Replace the control device
13	Mains voltage or frequent fault	Off-specification power supply voltage and/ or frequency	Check the input power supply
14	Internal processor fault	Internal fault	Replace the control device
15	Internal processor fault	Internal fault	Replace the control device
16	No flame: 1st safety time (PTFI)	No flame at the end of the first safety time	Inspect the system, check the gas pressure, check the UV flame sensor, check the wiring, etc.
17	Wiring fault	The system detected the presence of voltage on critical terminals (T16, T17, T18 or T19) at the wrong moment or there is no voltage when necessary	Inspect the wiring and make sure that the system is operating on a single-phase line (50/60Hz)
18	Safety relay fault	Internal fault	Replace the control device
19	Combustion airflow switch fault in the rest position	Open the circuit upon T13 start-up	Check the wiring for the air pressure switch
20	UV: no flame at the end of the 2nd safety time (MTFI)	No flame at the end of the 2nd safety time	Inspect the system, check the gas pressure, check the UV flame sensor, check the wiring, etc.
21	Safety relay fault	Internal fault	Replace the control device
22	Supervisor processor fault	Internal fault	Replace the control device
23	Supervisor memory test fault	Internal fault	Replace the control device
24	Flame loss during the operation (AUTO)	Loss of flame	Check the flame sensor or the fuel flow line
25	Supervisor processor data memory fault	Internal fault	Replace the control device
26	Supervisor processor internal fault	Internal fault	Replace the control device
27	Not used		
28	Not used		
29	Operating temperature out of range	Operating temperature below -40°C or above 70°C	Bring the control device within the specified temperature nominal values
30	Code memory fault	Internal fault	Replace the control device
31	FR: external short circuit	External short circuit between T24 and EARTH	Inspect the flame detection electrode
32	Check mode timeout (manual)	The interval for the manual mode (30 minutes) to end has elapsed	Exit the manual mode correctly to avoid timeout
33	False flame in stand-by mode	Unexpected flame (false or parasitic flame) detected during the Stand-by status	Check flame sensor or interference
34	Not used		

No.	Faults	Cause	Solution
35	Internal processor timeout	Internal fault	Replace the control device
36	Internal processor timeout	Internal fault	Replace the control device
37	Combustion air check timeout	The system could not perform verification tests of the combustion air during the burner sequence	Check the wiring or the air pressure switch
38	Internal processor timeout	Internal fault	Replace the control device
39	Internal processor timeout	Internal fault	Replace the control device
40	Internal hardware fault	Internal fault	Replace the control device
41	Internal hardware fault	Internal fault	Replace the control device
42	Main processor fault	Internal fault	Replace the control device
43	Supervisor processor fault	Internal fault	Replace the control device
44	Supervisor processor timeout	Internal fault	Replace the control device
45	Off-specification mains voltage	Off-specification mains voltage/frequency	Check the mains voltage level or the frequency. Contact the factory if the problem persists
46	Off-specification mains voltage	Off-specification mains voltage/frequency	Check the mains voltage level or the frequency. Contact the factory if the problem persists
47	UV: Internal fault	Internal fault	Replace the control device
48	Supervisor processor fault	Internal fault	Replace the control device
49	Main processor fault	Internal fault	Replace the control device
50	Ignition feedback fault	The system detected the presence of voltage on T16 at the wrong moment or there is no voltage when necessary	Check the wiring and make sure that the earthing is appropriate If the problem persists, contact the distributor/factory
51	Pilot feedback fault	The system detected the presence of voltage on T17 at the wrong moment or there is no voltage when necessary	Check the wiring and make sure that the earthing is appropriate. If the problem persists, contact the distributor/factory
52	Piloted valve feedback fault	The system detected the presence of voltage on T19 at the wrong moment or there is no voltage when necessary	Check the wiring and make sure that the earthing is appropriate If the problem persists, contact the distributor/factory
53	Actuator feedback waiting time expired	No actuator feedback on T8 for more than 10 minutes	Check the wiring Check the modulation equipment
54	Direct ignition valve feedback fault	The system detected the presence of voltage on T18 at the wrong moment or there is no voltage when necessary	Check the wiring and make sure that the earthing is appropriate. If the problem persists, contact the distributor/factory
55	Internal processor fault	Internal fault	Replace the control device
56	UV: false flame during operation	False flame detected before ignition	Check the flame sensor
57	FR: false flame during operation	False flame detected before ignition	Check the wiring Check the flame sensor Make sure that earthing is appropriate
58	T8 inlet fault	The system detected the presence of voltage on T8 at the wrong moment or there is no voltage when necessary	Check the wiring Check the actuator
59	Internal hardware fault	Internal fault	Replace the control device
60	Local reset fault	Local reset button pressed for more than 10 seconds or reset button locked	If the problem persists, replace the control device
61	Open POC fault	The fuel valve is open at the wrong moment	Check the wiring
62	UV: strong UV flame fault	The flame sensor is too close to the flame	Increase the distance between the flame sensor and the flame OR use an orifice to reduce the view field
63	Internal hardware fault	Internal fault	Replace the control device

Tab. R

A Appendix - Accessories

Output regulator kit for modulating gas/two-stage oil operation

With modulating operation, the burner continuously adjusts its output to the heat request, thereby ensuring a great stability of the controlled parameter: temperature or pressure.

The parts to be ordered are two:
- output regulator to be installed to the burner;
- probe to be installed to the heat generator.

Parameter to be controlled		Probe		Output regulator	
	Adjustment field	Type	Code	Type	Code
Temperature	- 100...+ 500°C	PT 100	3010110	RWF55.5	20099657
Pressure	0...2.5 bar 0...16 bar	Output probe 4...20 mA	3010213 3010214		

Extended head kit

Burner	Standard head length (mm)	Extended head length (mm)	Code
RLS 68-120/M MX	260	395	3010360

Soundproofing box kit

Burner	Code	Type	Reduction of noise levels
RLS 68-120/M MX	3010404	C4/5	10 [dB(A)]

Spacer kit

Burner	Thickness (mm)	Code
RLS 68-120/M MX	102	3000722

Continuous purging kit

Burner	Code
RLS 68-120/M MX	3010094

Differential switch kit

Burner	Code
RLS 68-120/M MX	20098337

Clean contacts kit

Burner	Code
RLS 68-120/M MX	20123294

Potentiometer kit

Burner	Code
RLS 68-120/M MX	3010416

Head kit for boilers with flame inversion

Burner	Code
RLS 68/M MX	20006401
RLS 120/M MX	20006402

Gas trains in compliance with EN 676

Please refer to manual.

B Appendix - Electrical panel layout

1	**Index of layouts**
2	Indication of references
3	Functional layout
4	Functional layout RFGO-A22
5	Functional layout RFGO-A22
6	Functional layout RFGO-A22
7	Functional layout
8	Electrical wiring that is the responsibility of the installer
9	Functional diagram RWF55.5...

2 Indication of references

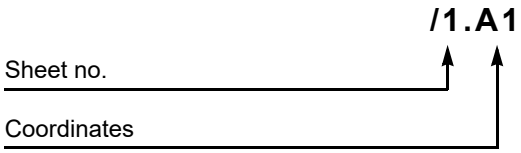

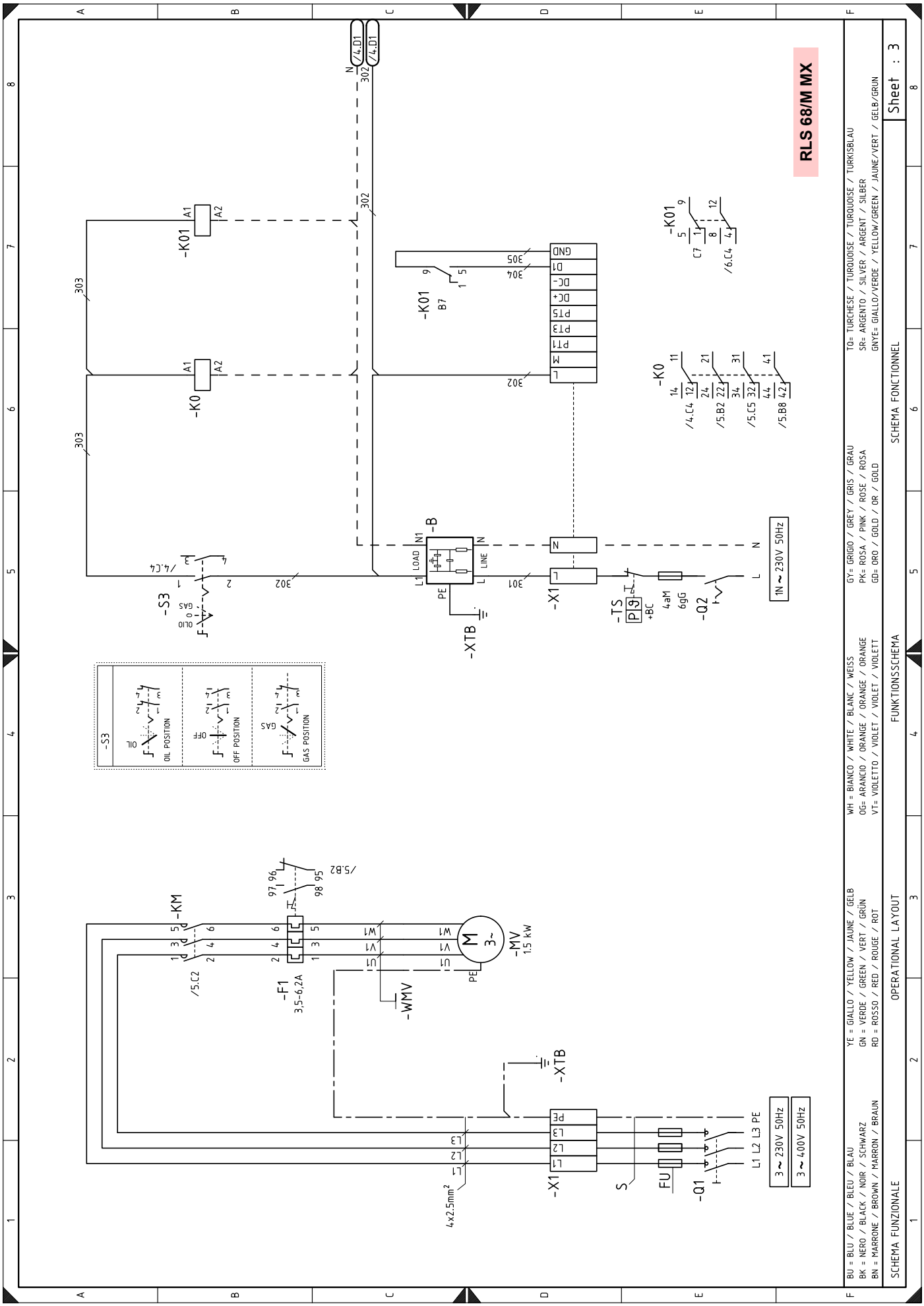
RLS 68/M MX
-K01
-K0
-S3
-B
-X1
-XTB
-TS
-Q2
-Q1
-KM
-F1
3,5-6,2A
-MV
1,5 kW
-WMV
FU
1N ~ 230V 50Hz
3 ~ 230V 50Hz
3 ~ 400V 50Hz
L1 L2 L3 PE
4x2.5mm²
OIL POSITION
OFF POSITION
GAS POSITION
BU = BLU / BLEU / BLAU
BK = NERO / BLACK / NOIR / SCHWARZ
BN = MARRONE / BROWN / MARRON / BRAUN
YE = GIALLO / YELLOW / JAUNE / GELB
GN = VERDE / GREEN / VERT / GRÜN
RD = ROSSO / RED / ROUGE / ROT
WH = BIANCO / WHITE / BLANC / WEISS
OG= ARANCIO / ORANGE / ORANGE / ORANGE
VT= VIOLETTO / VIOLET / VIOLET / VIOLETT
GY= GRIGIO / GREY / GRIS / GRAU
PK= ROSA / PINK / ROSE / ROSA
GD= ORO / GOLD / OR / GOLD
TQ= TURCHESE / TURQUOISE / TURQUOISE / TURKISBLAU
SR= ARGENTO / SILVER / ARGENT / SILBER
GNYE= GIALLO/VERDE / YELLOW/GREEN / JAUNE/VERT / GELB/GRÜN
SCHEMA FUNZIONALE
OPERATIONAL LAYOUT
FUNKTIONSSCHEMA
SCHEMA FONCTIONNEL
Sheet : 3

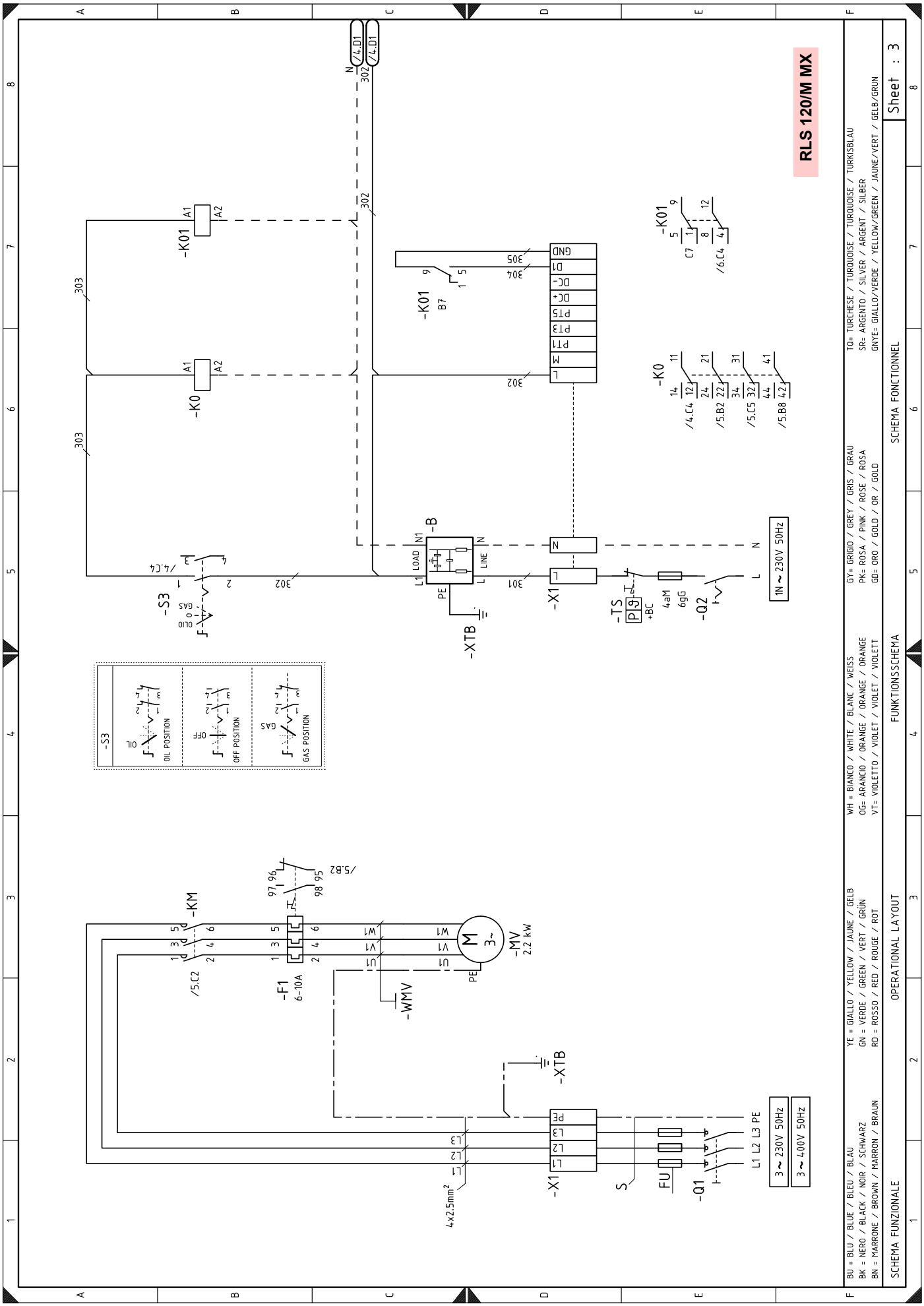
RLS 120/M MX
SCHEMA FUNZIONALE
OPERATIONAL LAYOUT
FUNKTIONSSCHEMA
SCHEMA FONCTIONNEL
Sheet : 3
BU = BLU / BLUE / BLEU / BLAU
BK = NERO / BLACK / NOIR / SCHWARZ
BN = MARRONE / BROWN / MARRON / BRAUN
YE = GIALLO / YELLOW / JAUNE / GELB
GN = VERDE / GREEN / VERT / GRÜN
RD = ROSSO / RED / ROUGE / ROT
WH = BIANCO / WHITE / BLANC / WEISS
OG= ARANCIO / ORANGE / ORANGE / ORANGE
VT= VIOLETTO / VIOLET / VIOLET / VIOLETT
GY= GRIGIO / GREY / GRIS / GRAU
PK= ROSA / PINK / ROSE / ROSA
GD= ORO / GOLD / OR / GOLD
TQ= TURCHESE / TURQUOISE / TURQUOISE / TURKISBLAU
SR= ARGENTO / SILVER / ARGENT / SILBER
GNYE= GIALLO/VERDE / YELLOW/GREEN / JAUNE/VERT / GELB/GRUN
3 ~ 230V 50Hz
3 ~ 400V 50Hz
1N ~ 230V 50Hz
OIL POSITION
OFF POSITION
GAS POSITION

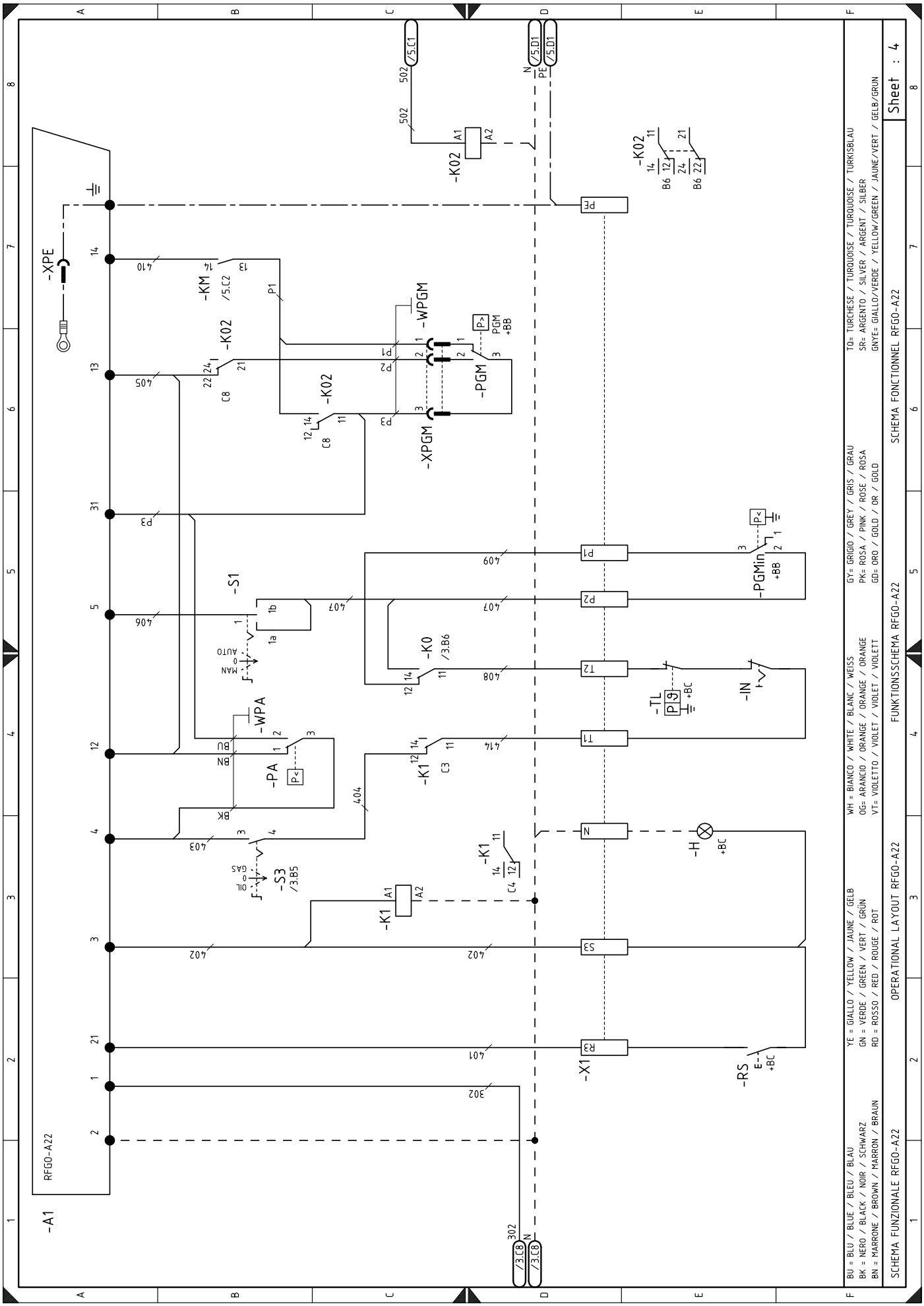
-A1
RFGO-A22
-XPE
-KM
-K02
-WPGM
-PGM
-XPGM
-S1
-K0
-WPA
-PA
-K1
-S3
-TL
-IN
-H
-X1
-RS
-PGMin
BU = BLU / BLEU / BLAU
BK = NERO / BLACK / NOIR / SCHWARZ
BN = MARRONE / BROWN / MARRON / BRAUN
YE = GIALLO / YELLOW / JAUNE / GELB
GN = VERDE / GREEN / VERT / GRÜN
RD = ROSSO / RED / ROUGE / ROT
WH = BIANCO / WHITE / BLANC / WEISS
OG= ARANCIO / ORANGE / ORANGE / ORANGE
VT= VIOLETTO / VIOLET / VIOLET / VIOLETT
GY= GRIGIO / GREY / GRIS / GRAU
PK= ROSA / PINK / ROSE / ROSA
GD= ORO / GOLD / OR / GOLD
TQ= TURCHESE / TURQUOISE / TURQUOISE / TURKISBLAU
SR= ARGENTO / SILVER / ARGENT / SILBER
GNYE= GIALLO/VERDE / YELLOW/GREEN / JAUNE/VERT / GELB/GRUN
SCHEMA FUNZIONALE RFGO-A22
OPERATIONAL LAYOUT RFGO-A22
FUNKTIONSSCHEMA RFGO-A22
SCHEMA FONCTIONNEL RFGO-A22
Sheet : 4

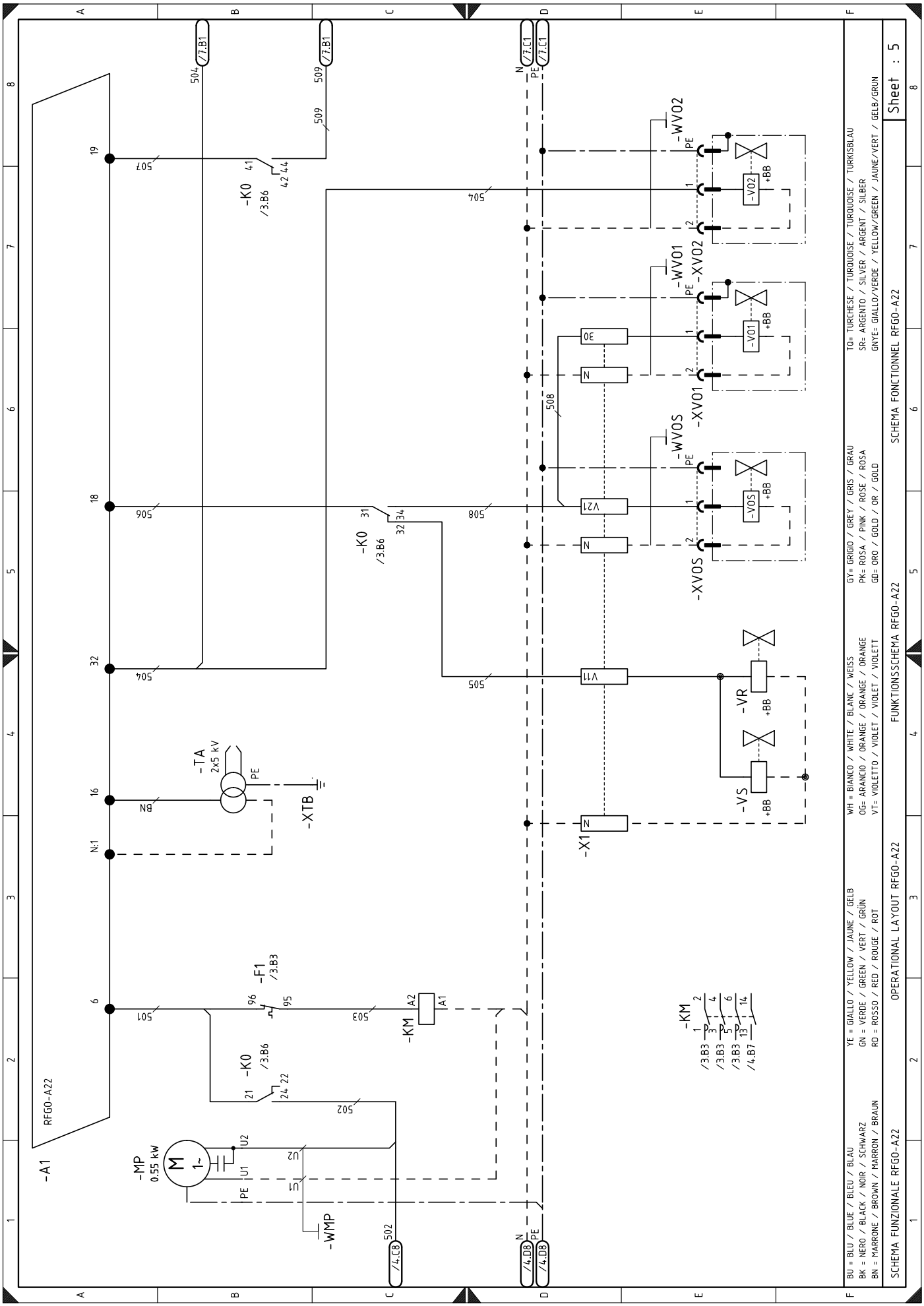

-A1
RFGO-A22
-MP
0.55 kW
-WMP
-K0
/3.B6
-F1
/3.B3
-KM
-TA
2x5 kV
-XTB
-X1
-VS
-VR
-XVOS
-WVOS
-XVO1
-WVO1
-XVO2
-WVO2
-VO1
-VO2
+BB
BU = BLU / BLUE / BLEU / BLAU
BK = NERO / BLACK / NOIR / SCHWARZ
BN = MARRONE / BROWN / MARRON / BRAUN
YE = GIALLO / YELLOW / JAUNE / GELB
GN = VERDE / GREEN / VERT / GRÜN
RD = ROSSO / RED / ROUGE / ROT
WH = BIANCO / WHITE / BLANC / WEISS
OG= ARANCIO / ORANGE / ORANGE / ORANGE
VT= VIOLETTO / VIOLET / VIOLET / VIOLETT
GY= GRIGIO / GREY / GRIS / GRAU
PK= ROSA / PINK / ROSE / ROSA
GD= ORO / GOLD / OR / GOLD
TQ= TURCHESE / TURQUOISE / TURQUOISE / TURKISBLAU
SR= ARGENTO / SILVER / ARGENT / SILBER
GNYE= GIALLO/VERDE / YELLOW/GREEN / JAUNE/VERT / GELB/GRUN
SCHEMA FUNZIONALE RFGO-A22
OPERATIONAL LAYOUT RFGO-A22
FUNKTIONSSCHEMA RFGO-A22
SCHEMA FONCTIONNEL RFGO-A22
Sheet : 5

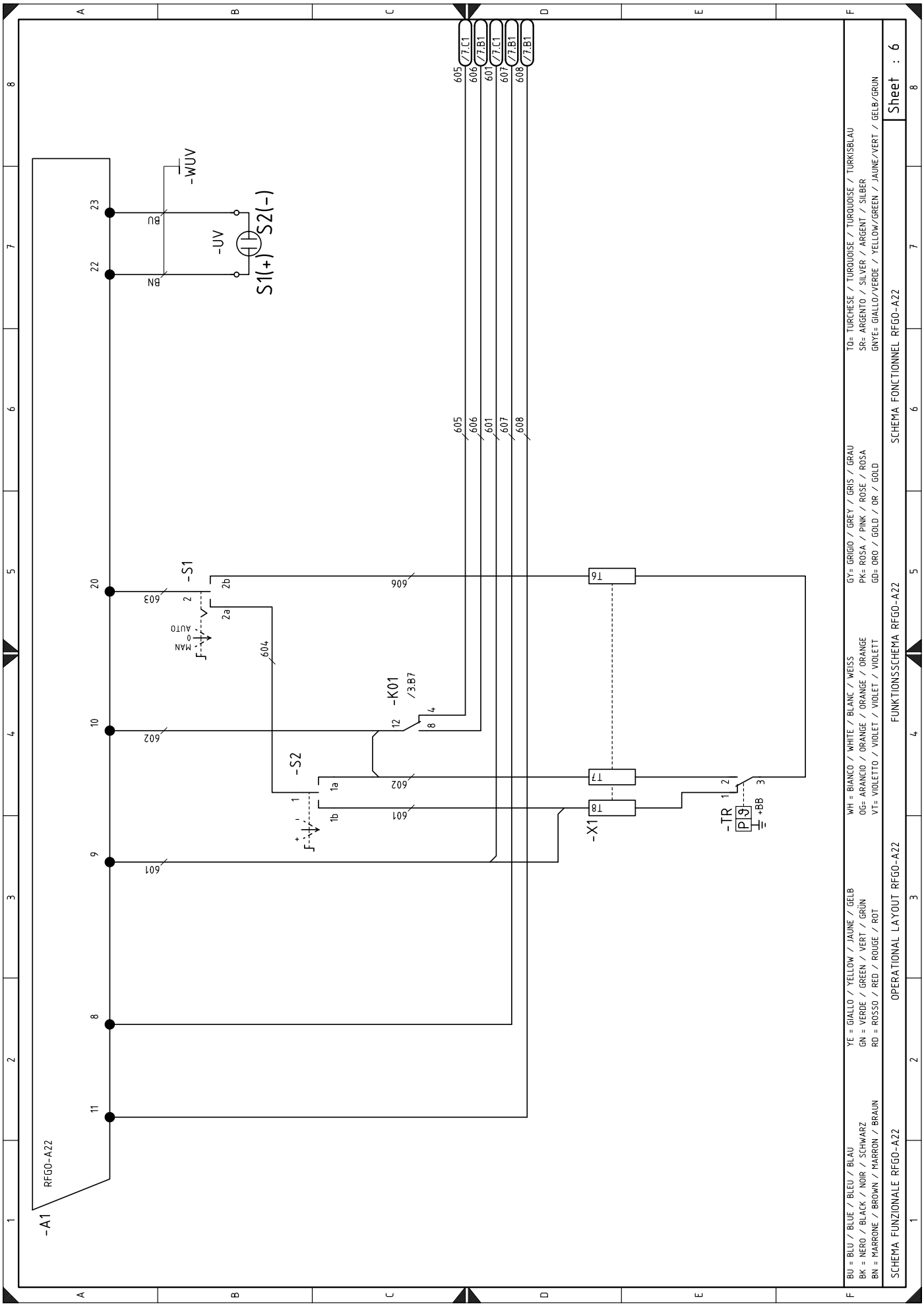
-A1
RFGO-A22
-WUV
-UV
S1(+)
S2(-)
-S1
-S2
-K01
/3.B7
-X1
-TR
+BB
T6
T7
T8
BU = BLU / BLUE / BLEU / BLAU
BK = NERO / BLACK / NOIR / SCHWARZ
BN = MARRONE / BROWN / MARRON / BRAUN
YE = GIALLO / YELLOW / JAUNE / GELB
GN = VERDE / GREEN / VERT / GRÜN
RD = ROSSO / RED / ROUGE / ROT
WH = BIANCO / WHITE / BLANC / WEISS
OG= ARANCIO / ORANGE / ORANGE / ORANGE
VT= VIOLETTO / VIOLET / VIOLET / VIOLETT
GY= GRIGIO / GREY / GRIS / GRAU
PK= ROSA / PINK / ROSE / ROSA
GD= ORO / GOLD / OR / GOLD
TQ= TURCHESE / TURQUOISE / TURQUOISE / TURKISBLAU
SR= ARGENTO / SILVER / ARGENT / SILBER
GNYE= GIALLO/VERDE / YELLOW/GREEN / JAUNE/VERT / GELB/GRUN
SCHEMA FUNZIONALE RFGO-A22
OPERATIONAL LAYOUT RFGO-A22
FUNKTIONSSCHEMA RFGO-A22
SCHEMA FONCTIONNEL RFGO-A22
Sheet : 6

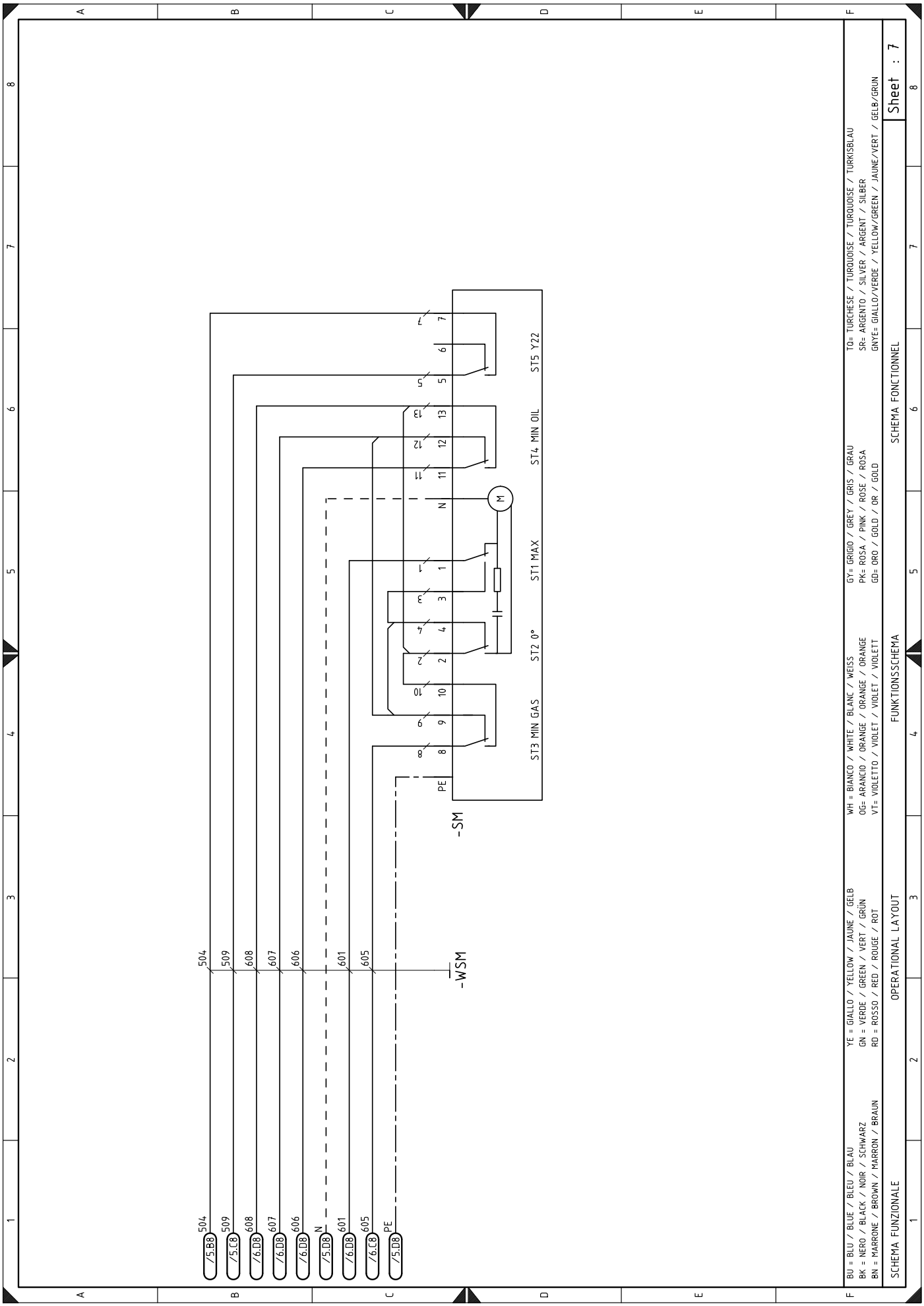
ST5 Y22
ST4 MIN OIL
ST1 MAX
ST2 0°
ST3 MIN GAS
-SM
-WSM
M
PE
N
504
509
608
607
606
601
605
/5.B8
/5.C8
/6.D8
/6.C8
/5.D8
BU = BLU / BLEU / BLAU
BK = NERO / BLACK / NOIR / SCHWARZ
BN = MARRONE / BROWN / MARRON / BRAUN
YE = GIALLO / YELLOW / JAUNE / GELB
GN = VERDE / GREEN / VERT / GRÜN
RD = ROSSO / RED / ROUGE / ROT
WH = BIANCO / WHITE / BLANC / WEISS
OG= ARANCIO / ORANGE / ORANGE / ORANGE
VT= VIOLETTO / VIOLET / VIOLET / VIOLETT
GY= GRIGIO / GREY / GRIS / GRAU
PK= ROSA / PINK / ROSE / ROSA
GD= ORO / GOLD / OR / GOLD
TQ= TURCHESE / TURQUOISE / TURQUOISE / TURKISBLAU
SR= ARGENTO / SILVER / ARGENT / SILBER
GNYE= GIALLO/VERDE / YELLOW/GREEN / JAUNE/VERT / GELB/GRUN
SCHEMA FUNZIONALE
OPERATIONAL LAYOUT
FUNKTIONSSCHEMA
SCHEMA FONCTIONNEL
Sheet : 7

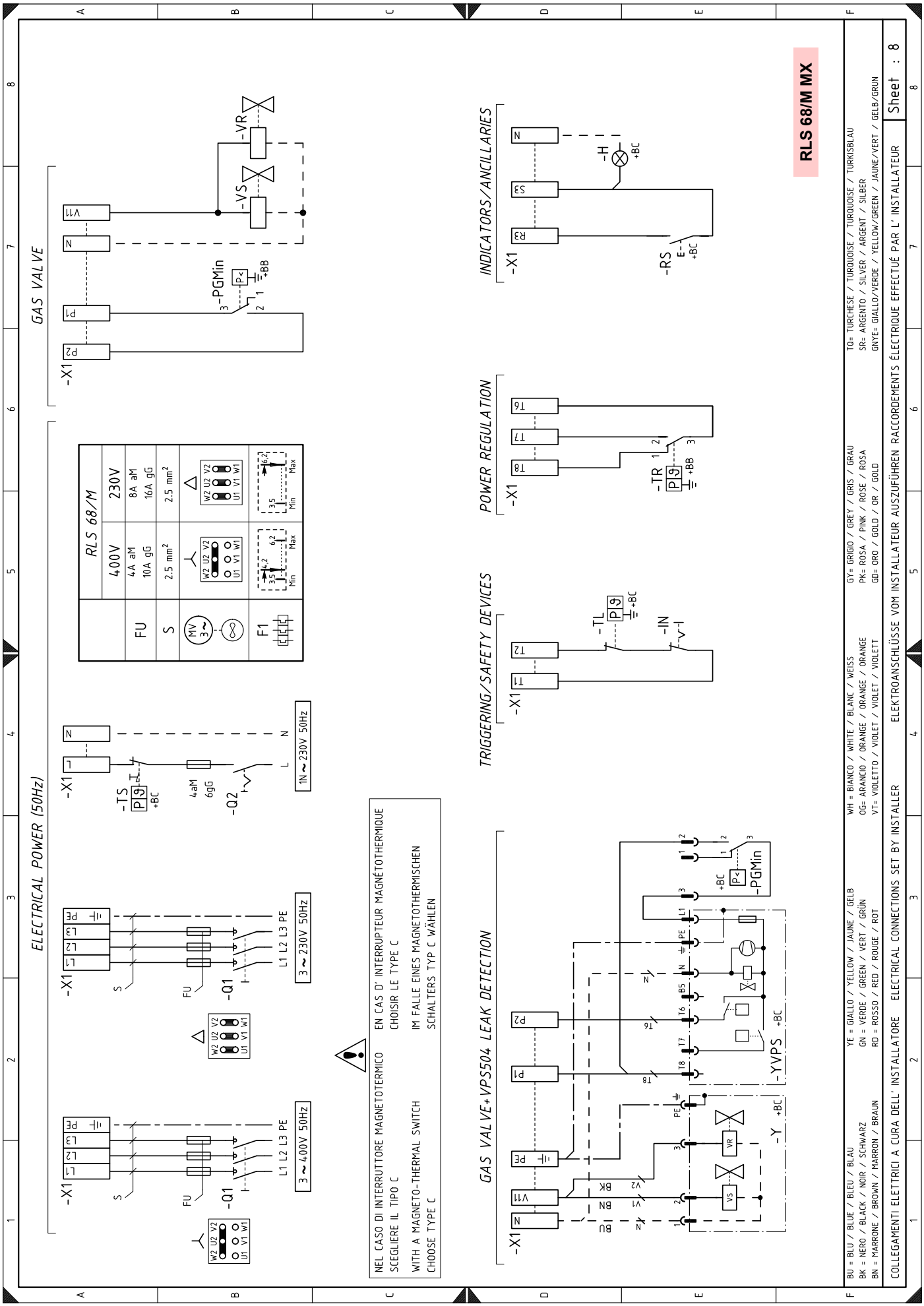
ELECTRICAL POWER (50Hz)
GAS VALVE
RLS 68/M
400V
230V
FU
S
F1
-X1
-TS
-Q1
-Q2
-PGMin
-VS
-VR
3 ~ 400V 50Hz
3 ~ 230V 50Hz
1N ~ 230V 50Hz
L1 L2 L3 PE
NEL CASO DI INTERRUTTORE MAGNETOTERMICO SCEGLIERE IL TIPO C
WITH A MAGNETO-THERMAL SWITCH CHOOSE TYPE C
EN CAS D' INTERRUPTEUR MAGNÉTOTHERMIQUE CHOISIR LE TYPE C
IM FALLE EINES MAGNETOTHERMISCHEN SCHALTERS TYP C WÄHLEN
GAS VALVE+VPS504 LEAK DETECTION
-YVPS
-Y
INDICATORS/ANCILLARIES
-H
-RS
POWER REGULATION
-TR
TRIGGERING/SAFETY DEVICES
-TL
-IN
RLS 68/M MX
BU = BLU / BLUE / BLEU / BLAU
BK = NERO / BLACK / NOIR / SCHWARZ
BN = MARRONE / BROWN / MARRON / BRAUN
YE = GIALLO / YELLOW / JAUNE / GELB
GN = VERDE / GREEN / VERT / GRÜN
RD = ROSSO / RED / ROUGE / ROT
WH = BIANCO / WHITE / BLANC / WEISS
OG= ARANCIO / ORANGE / ORANGE / ORANGE
VT= VIOLETTO / VIOLET / VIOLET / VIOLETT
GY= GRIGIO / GREY / GRIS / GRAU
PK= ROSA / PINK / ROSE / ROSA
GD= ORO / GOLD / OR / GOLD
TQ= TURCHESE / TURQUOISE / TURQUOISE / TURKISBLAU
SR= ARGENTO / SILVER / ARGENT / SILBER
GNYE= GIALLO/VERDE / YELLOW/GREEN / JAUNE/VERT / GELB/GRUN
COLLEGAMENTI ELETTRICI A CURA DELL' INSTALLATORE
ELECTRICAL CONNECTIONS SET BY INSTALLER
ELEKTROANSCHLÜSSE VOM INSTALLATEUR AUSZUFÜHREN
RACCORDEMENTS ÉLECTRIQUE EFFECTUÉ PAR L' INSTALLATEUR
Sheet : 8

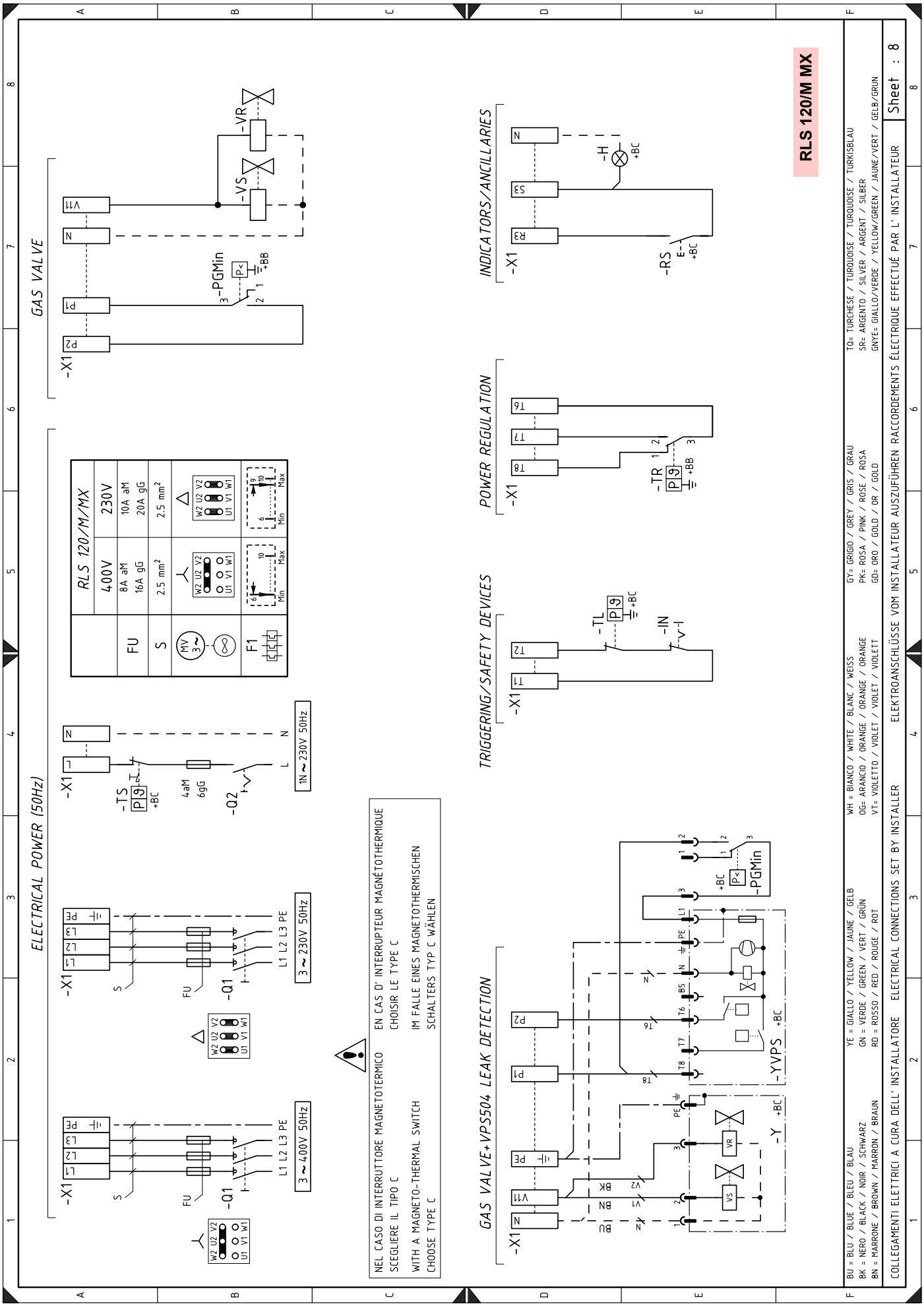
ELECTRICAL POWER (50Hz)
GAS VALVE
INDICATORS/ANCILLARIES
POWER REGULATION
TRIGGERING/SAFETY DEVICES
GAS VALVE+VPS504 LEAK DETECTION
RLS 120/M/MX
400V
230V
FU
8A aM
16A gG
10A aM
20A gG
S
2.5 mm²
2.5 mm²
F1
3 ~ 400V 50Hz
3 ~ 230V 50Hz
1N ~ 230V 50Hz
NEL CASO DI INTERRUTTORE MAGNETOTERMICO
SCEGLIERE IL TIPO C
WITH A MAGNETO-THERMAL SWITCH
CHOOSE TYPE C
EN CAS D' INTERRUPTEUR MAGNÉTOTHERMIQUE
CHOISIR LE TYPE C
IM FALLE EINES MAGNETOTHERMISCHEN
SCHALTERS TYP C WÄHLEN
RLS 120/M MX
BU = BLU / BLUE / BLEU / BLAU
BK = NERO / BLACK / NOIR / SCHWARZ
BN = MARRONE / BROWN / MARRON / BRAUN
YE = GIALLO / YELLOW / JAUNE / GELB
GN = VERDE / GREEN / VERT / GRÜN
RD = ROSSO / RED / ROUGE / ROT
WH = BIANCO / WHITE / BLANC / WEISS
OG= ARANCIO / ORANGE / ORANGE / ORANGE
VT= VIOLETTO / VIOLET / VIOLET / VIOLETT
GY= GRIGIO / GREY / GRIS / GRAU
PK= ROSA / PINK / ROSE / ROSA
GD= ORO / GOLD / OR / GOLD
TQ= TURCHESE / TURQUOISE / TURQUOISE / TURKISBLAU
SR= ARGENTO / SILVER / ARGENT / SILBER
GNYE= GIALLO/VERDE / YELLOW/GREEN / JAUNE/VERT / GELB/GRUN
COLLEGAMENTI ELETTRICI A CURA DELL' INSTALLATORE
ELECTRICAL CONNECTIONS SET BY INSTALLER
ELEKTROANSCHLÜSSE VOM INSTALLATEUR AUSZUFÜHREN
RACCORDEMENTS ÉLECTRIQUE EFFECTUÉ PAR L' INSTALLATEUR
Sheet : 8

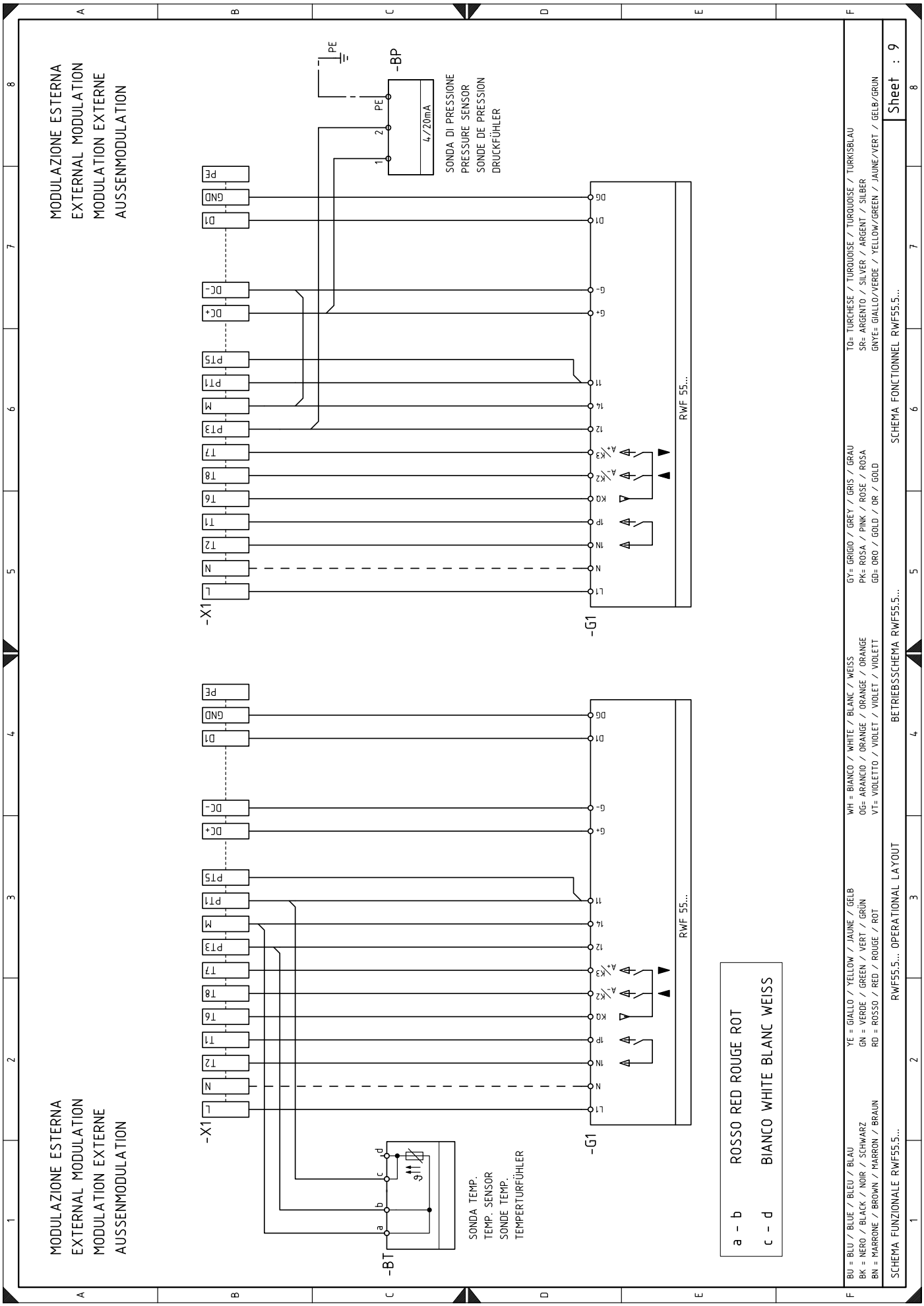
MODULAZIONE ESTERNA
EXTERNAL MODULATION
MODULATION EXTERNE
AUSSENMODULATION
-BP
4/20mA
SONDA DI PRESSIONE
PRESSURE SENSOR
SONDE DE PRESSION
DRUCKFÜHLER
-X1
-G1
RWF 55...
-BT
SONDA TEMP.
TEMP. SENSOR
SONDE TEMP.
TEMPERTURFÜHLER
a - b ROSSO RED ROUGE ROT
c - d BIANCO WHITE BLANC WEISS
BU = BLU / BLUE / BLEU / BLAU
BK = NERO / BLACK / NOIR / SCHWARZ
BN = MARRONE / BROWN / MARRON / BRAUN
YE = GIALLO / YELLOW / JAUNE / GELB
GN = VERDE / GREEN / VERT / GRÜN
RD = ROSSO / RED / ROUGE / ROT
WH = BIANCO / WHITE / BLANC / WEISS
OG= ARANCIO / ORANGE / ORANGE / ORANGE
VT= VIOLETTO / VIOLET / VIOLET / VIOLETT
GY= GRIGIO / GREY / GRIS / GRAU
PK= ROSA / PINK / ROSE / ROSA
GD= ORO / GOLD / OR / GOLD
TQ= TURCHESE / TURQUOISE / TURQUOISE / TÜRKISBLAU
SR= ARGENTO / SILVER / ARGENT / SILBER
GNYE= GIALLO/VERDE / YELLOW/GREEN / JAUNE/VERT / GELB/GRÜN
SCHEMA FUNZIONALE RWF55.5...
RWF55.5... OPERATIONAL LAYOUT
BETRIEBSSCHEMA RWF55.5...
SCHEMA FONCTIONNEL RWF55.5...
Sheet : 9

Wiring layout key

A1	Electrical control box
B	Filter to protect against radio disturbance
BP	Pressure probe
BT	Temperature probe
F1	Thermal relay
FU	Three-phase power supply fuses
G1	RWF55.5 output power regulator
H	Remote lockout signal
KM	Fan motor contactor
K0	Relay
K1	Relay
K01	Relay
K02	Relay
MV	Fan motor
MP	Pump motor
Q1	Three-phase line disconnecting switch
Q2	Single-phase line disconnecting switch
SM	Servomotor
PA	Air pressure switch
PGmin	Minimum gas pressure switch
PGM	Maximum gas pressure switch
TL	Limit remote control: shuts down the burner when the temperature or pressure in the boiler reaches the pre-set value.
TR	Adjustment remote control: controls 1st and 2nd stage operation.
TS	Safety remote control: intervenes in the event of TL failure.
IN	Burner manual stop electric switch
RS	Reset button
S1	Operating mode switch: MAN = manual AUT = automatic OFF = off
S2	Button for - = output reduction + = output increase
S3	Oil/gas selector switch
TA	Ignition transformer
X1	Burner terminal strip
XPE	Control box earth
XPGM	Maximum gas pressure switch connector
XTB	Burner earth
XVOS	Safety valve connector (light oil)
XVO1	1st stage adjustment valve connector (light oil)
XVO2	2nd stage adjustment valve connector (light oil)
UV	Flame sensor
VS	Safety valve (gas)
VR	1st stage adjustment valve (gas)
VOS	Safety valve (light oil)
VO1	1st stage adjustment valve (light oil)
VO2	2nd stage adjustment valve (light oil)
Y	Gas adjustment valve + gas safety valve
YVPS	Gas valve leak detection device

RIELLO S.p.A.
I-37045 Legnago (VR)
Tel.: +39.0442.630111
http:// www.riello.it
http:// www.riello.com

Subject to modifications