cod. 20032882 rev. 19 10/2020



RTQ

EN INSTALLATION, OPERATION, MAINTENANCE AND SYSTEM MANAGEMENT MANUAL

RIELLO

RANGE

MODEL	CODE
RTQ 50	20029726
RTQ 64	20029727
RTQ 82	20029729
RTQ 105	20029731
RTQ 154	20008935
RTQ 203	20008937
RTQ 235	20008938
RTQ 297	20008940
RTQ 323	20008941
RTQ 357	20008942
RTQ 418	20008943
RTQ 467	20008944
RTQ 537	20113300
RTQ 597	20113301
RTQ 715	20008947
RTQ 837	20107214

ACCESSORIES
For a complete list of accessories and details of their compatibility, refer to the Catalogue.

Dear Customer,
Thank you for choosing a **RIELLO** boiler. You have purchased a modern, high efficiency, quality product that is designed to give dependable and safe service and to provide comfort in the home for many years to come. Arrange for your boiler to be serviced regularly by an authorised Technical Assistance Service **RIELLO**. Their personnel are specially trained to keep your boiler efficient and cheap to run. They also stock any original spare parts that might be required.
This instruction manual contains important instructions and precautions that must be observed to ensure the efficient functioning of your **RTQ** boiler.

Please accept our renewed thanks for your purchase
Riello S.p.A.

CONFORMITY

RIELLO RTQ boilers conform to:
- Energy-Related Products Directive 2009/125/EC
- Low Voltage Directive 2014/35/EU
- Models up to 400 kW conform to the Directive 92/42/EEC on efficiency requirements and to the EU Delegated Regulation 813/2013.
- When used in conjunction with a CE-marked forced draught gas burner, they also satisfy the requirements of Regulation (EU) 2016/426

CE

CONTENTS

1 GENERAL INFORMATION 4
1.1 General Safety Information 4
1.2 Precautions. 4
1.3 Description of the appliance 4
1.4 Control panels. 6
1.5 Recommended burners 7
1.6 Identification 9
1.7 Technical specifications. 10

2 INSTALLATION 12
2.1 Unpacking the product 12
2.2 Overall dimensions and weights 13
2.3 Handling. 15
2.4 Place of installation 15
2.5 Installation of low heat output boilers 15
2.6 Installation in older systems and systems requiring modernisation 16
2.7 Water connections 16
2.8 Anti-condensate pump. 19
2.9 Discharge of combustion products 20
2.10 Door hinges 20
2.11 Changing the direction of door opening 21
2.12 Fitting the insulation and turbulators 23
2.13 Earth connection 25
2.14 Fitting the casing panels 25
2.15 Preparing for initial startup 30
2.16 Initial startup 30
2.17 Checks during and after initial start-up 31
2.18 Maintenance. 32
2.19 Cleaning the boiler 33
2.20 Troubleshooting 35

3 USE. 36
3.1 Putting into service 36
3.2 Temporary shutdown 37
3.3 Preparing for extended periods of disuse 37
3.4 Cleaning 37
3.5 Maintenance. 38
3.6 Useful information 39

The following symbols are used in this manual:

CAUTION! = Identifies actions that require caution and adequate preparation.

STOP! = Identifies actions that you MUST NOT do.

This manual, Code 20032882 - Rev. 19 (10/2020) comprises 40 pages.

1 GENERAL INFORMATION

1.1 General Safety Information

⚠ The boiler is delivered in separate crates. Check that it is complete, undamaged and as ordered as soon as you receive it. Report any discrepancies or damage to the dealer who sold it.

⚠ This product must be installed by a legally qualified heating engineer. On completion of the installation, the installer must issue the owner with a declaration of conformity confirming that the installation has been completed to the highest standards in compliance with the instructions provided by **RIELLO** in this instruction manual, and that it conforms to all applicable laws and standards.

⚠ This product must only be used for the purpose for which it is designed and made, as specified by **RIELLO**. **RIELLO** declines all responsibility, contractual or other, for damage to property or injury to persons or animals caused by improper installation, adjustment, maintenance or use.

⚠ If you notice any water leaking from the boiler, disconnect it immediately from the mains electricity supply, shut off the water supply, and notify your local **RIELLO**'s Technical Assistance Service or a qualified heating engineer immediately.

⚠ Periodically check that operating pressure in the water circuit is over 1 bar but below the maximum limit specified for the boiler. If this is not the case, contact Technical Assistance Service **RIELLO** or a professionally qualified heating engineer.

⚠ If the boiler is not going to be used for an extended period of time, contact **RIELLO**'s Technical Assistance Service or a qualified heating engineer to have it prepared for shutdown as follows
- Switch the boiler OFF at the control panel
- Turn the main system switch "off"
- Close the fuel cock and heating circuit water cock
- Drain the central heating circuit if there is any risk of freezing.

⚠ The boiler must be serviced at least once a year.

⚠ This instruction manual is an integral part of the boiler. It must be kept safe and must ALWAYS accompany the boiler, even if it is sold to another owner or transferred to another user or to another installation. If you damage or lose this manual, order a replacement immediately from your local **RIELLO**'s Technical Assistance Service.

1.2 Precautions

The operation of any appliance that uses fuel, electrical power and water demands that a number of fundamental safety precautions be respected:

⊖ It is forbidden to use electrical devices or equipment, such as switches, appliances, etc. if there is a smell of gas or unburnt products. If so:
- Ventilate the room, opening doors and windows
- Close the fuel shut-off cock
- Report the fault immediately to the **RIELLO**'s Technical Assistance Service or a professionally qualified heating engineer.

⊖ Do not touch the boiler while barefoot or wet.

⊖ Never clean or service the boiler without first disconnecting it from the mains electricity supply by turning the main power switch and the control panel switch OFF.

⊖ Do not tamper with or adjust the safety or control devices without prior authorisation and instructions from the manufacturer.

⊖ Do not plug or block the condensate drain outlet.

⊖ Never pull, disconnect, or twist the electrical cables coming from the appliance even if it is disconnected from the mains electricity supply.

⊖ Do not obstruct or restrict the vents in the room where the boiler is installed. Adequate ventilation is essential for correct combustion.

⊖ Do not expose the boiler to the elements. It is designed to work indoors.

⊖ Do not switch the boiler off if outdoor temperature drops below ZERO (risk of freezing).

⊖ Do not store containers of flammable substances in the room where the boiler is installed.

⊖ Do not allow children or persons with reduced physical, sensorial or mental abilities or with insufficient experience and knowledge to operate this system without proper supervision from the person responsible for its safe use.

⊖ Do not dispose of packaging material into the environment, or leave it within the reach of children, since it can become a potential hazard. Dispose of packaging material in compliance with applicable legislation.

1.3 Description of the appliance

RIELLO RTQ steel boilers are high efficiency boilers with horizontal, flame reversal combustion chambers and concentrically arranged flue gas pipes. They are designed for central heating and, when used in conjunction with a suitable storage cylinder, for domestic hot water production too.
Because they operate at low pressure, they provide a gradual heating action without thermal shock.

The most important technical features of these boilers are:
- The combustion chamber and heat exchange system are specially designed and shaped to achieve the best possible volume ratio;
- Only top quality materials are used to ensure a long working life.

Stainless steel turbulators inside the flue gas pipes establish an ideal pressure inside the combustion chamber and an ideal flue gas temperature. Evenly distributed thermal load optimises the efficiency of the boiler-burner system.
The boiler body is thoroughly insulated with a layer of high density glass wool.
The boiler's front door and the flue gas box can be opened completely to facilitate the inspection, maintenance and cleaning of internal parts and to speed up servicing in general.
The front door can open in either direction, even without removing the burner.

RTQ 50÷235

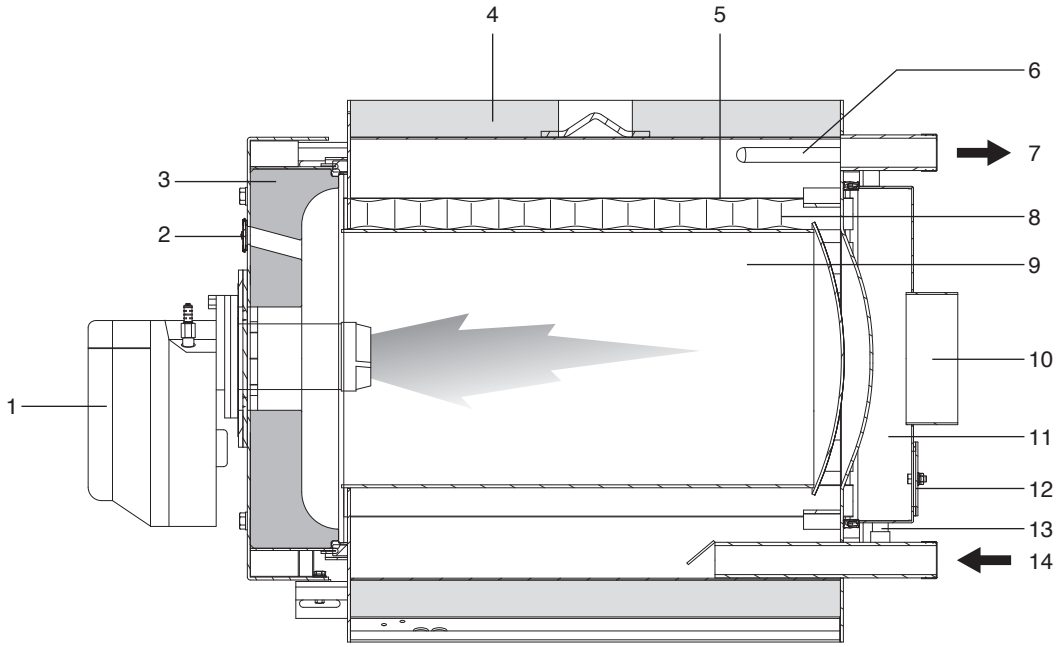

1 Burner
2 Flame inspection window
3 Door
4 Casing
5 Flue gas pipes
6 Instrument bulb/sensor sockets
7 Central heating flow
8 Turbulators
9 Combustion chamber
10 Flue gas exhaust
11 Flue gas box
12 Inspection window
13 Condensate outlet
14 Central heating return

RTQ 297÷837

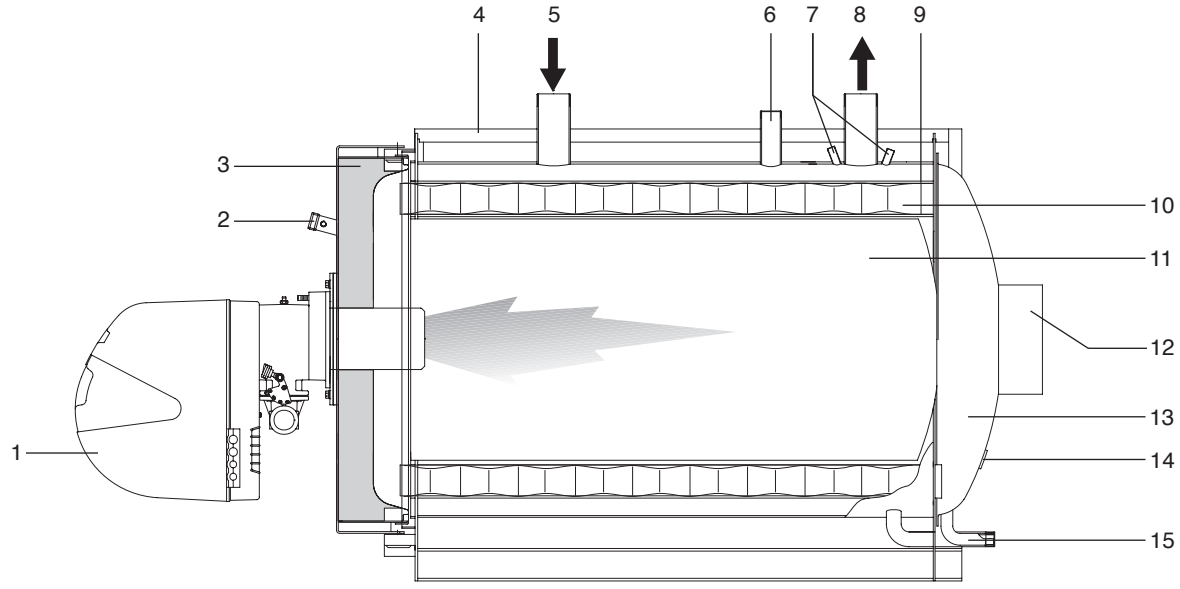

1 Burner
2 Flame inspection window with pressure measurement / cooling valve
3 Door
4 Casing
5 Central heating return
6 Safety device fitting
7 Instrument bulb/sensor sockets
8 Central heating flow
9 Flue gas pipes
10 Turbulators
11 Combustion chamber
12 Flue gas exhaust
13 Flue gas box
14 Inspection window
15 Condensate outlet

1.4 Control panels

The **RIELLO** control panels that can be used with **RIELLO RTQ** steel boilers are listed below. These control panels cater for all the needs of the heating system and of all the devices installed in it.

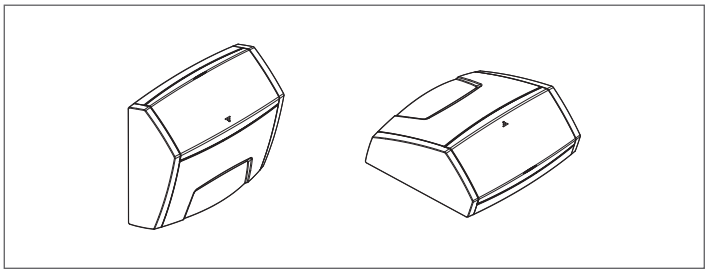

TECH CLIMA TOP for central heating (1 direct zone and 2 mixed zones) and domestic hot water production with a single stage, two stage, or modulating burner. Also for controlling solar heating system and cascaded boiler systems.

TECH PRIME for central heating only (1 direct zone) with a single or two stage burner.

TECH CLIMA COMFORT for central heating (1 direct zone and 1 mixed zone) and domestic hot water production with a single stage burner. Also for controlling solar heating system and cascaded boiler systems.

TECH PRIME ACS for central heating (1 direct zone) and domestic hot water production with a single or two stage burner.

When a TECH CLIMA TOP or CLIMA COMFORT control panel is installed, the boiler return (cold) line must be equipped with a temperature sensor socket. See the Catalogue for the necessary accessory part numbers.

1.5 Recommended burners

The burners recommended to obtain the best possible performance from **RIELLO RTQ** boilers are:

BURNERS	RTQ						Long head *
MODEL	418	467	537	597	715	837	
GAS							
RS 44 /1 MZ t.l.	x						
RS 50 t.l.		x					
RS 70 t.l.			x	x	x		
RS 100 t.l.						x	
RS 50/M t.l.		x					
RS 70/M t.l.			x	x	x		
RS 100/M t.l.						x	
MIXED OIL/GAS							
RLS 50	x	x					Accessory
RLS 70			x	x	x		Accessory
RLS 100						x	Accessory
RLS 68 M MX t.l.	x	x	x	x			
RLS 120 M MX t.l.					x	x	

(*) Long head REQUIRED.

BURNERS	RTQ						Long head *
MODEL	418	467	537	597	715	837	
OIL							
RL 50 t.l.	x	x	x				
RL 70 t.l.				x	x		
RL 100 t.l.						x	
RL 50/M t.l.	x	x	x				
RL 70/M t.l.				x	x		
RL 100/M t.l.						x	
NAPHTHA							
P45/N ECO t.l.	x						
P60/N ECO t.c.		x	x	x			
P60/N ECO t.l.					x		

(*) Long head REQUIRED.

⚠ Please see the manufacturer's catalogue for the burner code definition and the accessories required.

⚠ Burner/boiler combinations have been calculated on the basis of the burner working at 3% 02.

⚠ Long heads and burner plates are required for the correct installation and coupling of the burners.

⚠ See the instruction manual provided with the burner for further information on, burner installation, electrical connections, burner adjustments.

⚠ Long heads and burner plates are required for the correct installation and coupling of the burners.

⚠ If a two stage burner is installed, 1st stage heat input must not be less than 70% of total heat input. With liquid fuel burners equipped with 2 nozzles, it is therefore important to choose the correct first stage nozzle.

⚠ To assemble/disassemble the burners equipped with recirculation tube, it might be necessary to remove the latter before carrying out such operations (strictly comply with the use and maintenance manual of the burner).

⚠ In Italy, the Decree of the President of the Council of Ministers of the 2nd October 1995 requires that heating systems with heating power of less than 3 MW use fuel oil with a sulphur content of less than 0.3 % by weight.

⚠ When running on naphtha, reduce the boiler's maximum rated heat output by 20%.

IMPORTANT NOTES FOR BURNER INSTALLATION

Before fixing the burner to the boiler, make sure that:
- The door opens the right way (see the relevant sections for details on how to reverse the door)
- The length (L) of the burner fixing bolts is less than (S), i.e. the total depth of the seal, plates and washer. **Longer bolts can cause the door to warp, compromising its ability to seal the boiler hermetically and permitting the release of combustion fumes.**

To ensure correct burner installation, also refer to the burner's own manual.

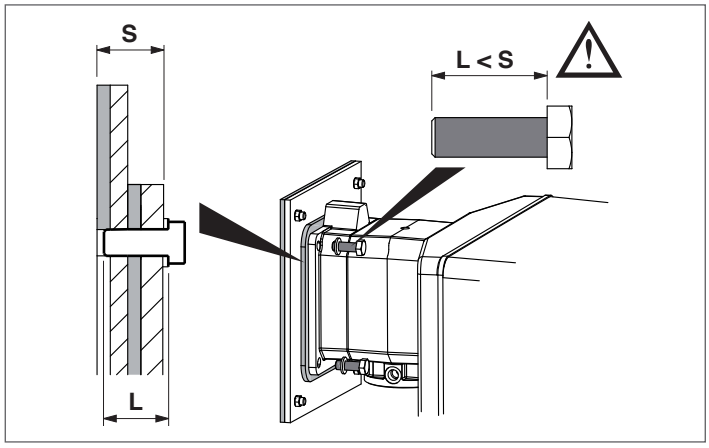

MODELS RTQ 50÷105

IMPORTANT
If you are installing a new boiler but re-using an old burner, always perform the following checks:
- make sure that the performance of the old burner is adequate for the requirements of the boiler;
- make sure that the length and diameter of the burner's blast tube are as specified in the following table.

⚠ When you finish installing the burner in the boiler, fill the gap between the burner's blast tube and the refractory material in the door with the ceramic insulation (A) supplied with the boiler.

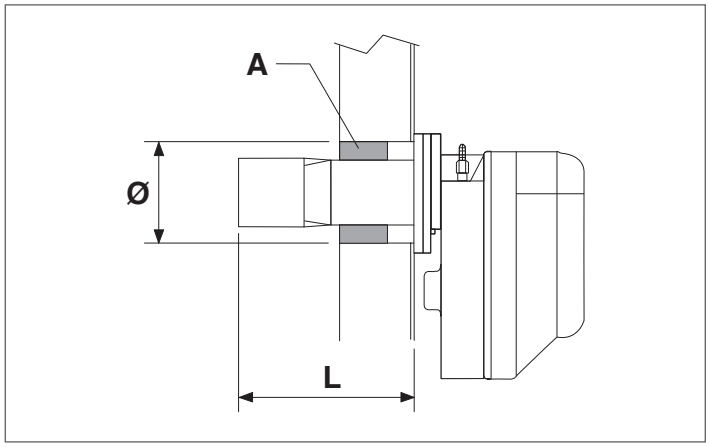

	RTQ			
	50	64	82	105
Burner head L min. (mm)	150	150	195	195
Ø hole in door (mm)	110	110	140	140

⚠ Blast tubes must not exceed the specified lengths by more than 20%.

⛔ Do not re-use old burners if their blast tube lengths are below those specified in the table.

BURNER HOLDER PLATE
RIELLO RTQ 50÷105 boilers have burner plates with holes arranged to accept the recommended burners. The following table shows the dimensions of the holes.

	RTQ			
	50	64	82	105
Ø (mm)	110	110	140	140
A (mm)	106	106	120	120
Threads	M8	M8	M8	M8

MODELS RTQ 154÷837

IMPORTANT
If you are installing a new boiler but re-using an old burner, always perform the following checks:
- make sure that the performance of the old burner is adequate for the requirements of the boiler;
- make sure that the length and diameter of the burner's blast tube are as specified in the following table.

⚠ When you finish installing the burner in the boiler, fill the gap between the burner's blast tube and the refractory material in the door with the ceramic insulation (A) supplied with the boiler.

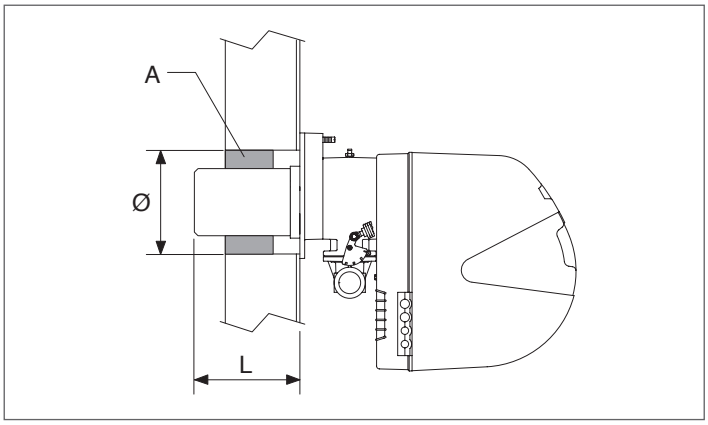

	RTQ					
	154	203	235	297	323	357
Burner head min. L (mm)	205	215	215	215	215	215
Ø hole in door (mm)	160	160	160	180	180	195

	RTQ					
	418	467	537	597	715	837
Burner head min. L (mm)	245	245	245	245	265	265
Ø hole in door (mm)	195	195	195	195	195	195

⛔ Do not re-use old burners if their blast tube lengths are below those specified in the table.

BURNER HOLDER PLATE
RIELLO RTQ 154 to 837 boilers come fitted with burner plates that have been pre-drilled for the recommended burner types. The burner plates must be drilled on installation if other burners are used.

1.6 Identification

The products are identified by:

Serial number plate
This is located on the boiler body and specifies the serial number, model, and furnace power.



Data plate
This lists the technical specifications and performance of the product. It comes inside the documentation envelope. On completion of the installation you MUST apply it in a clearly visible position at the top of one of the side panels. If you damage or lose this label, order a replacement immediately from **RIELLO**'s Technical Assistance Service.

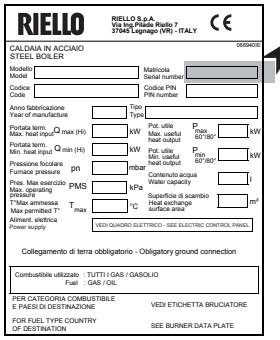

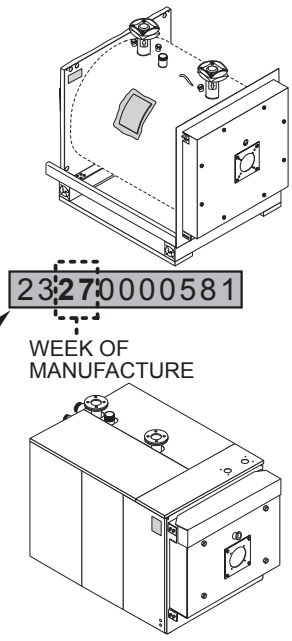

⚠ If these plates or any other means of clearly identifying the product are defaced, removed or lost, proper installation and servicing may be rendered difficult.

1.7 Technical specifications

DESCRIPTION		RTQ				
		50	64	82	105	
Fuel		Gas / Oil				
Rated heat input	min	34,4	54,7	69,5	88,5	kW
	max	54,2	69,3	88,8	113,6	kW
Rated useful heat output Pn	min	32	51	65	83	kW
	max	50	64	82	105	kW
Useful efficiency at min. Pn	min	93,1	93,3	93,5	93,8	%
	max	92,2	92,3	92,3	92,4	%
Useful eff. at 30% max. Pn		95,1	95,3	95,4	95,7	%
Constant pressure drop		< 1,5				
Flue gas temperature (ΔT)		182	167	177	170	°C
Flue gas mass flow rate		0,024	0,03	0,039	0,051	kg/sec
Furnace pressure		0,3	0,8	0,75	1,4	mbar
Furnace volume		37,8	45,2	80,2	97,43	dm^3
Tot. volume of flue gas side		62,2	73,4	119,1	139,7	dm^3
Total surface area for heat exchange		1,9	2,5	3,02	3,62	m^2
Volumetric heat load		1435	1534	1108	1166	kW/m^3
Specific heat load		26,7	25,8	27,5	29,4	kW/m^2
Max. operating pressure		6				bar
Max. admissible temp.		110				°C
Max. operating temp.		95				°C
Min. admissible water return temp.		50				°C
Pressure drops	ΔT 10°C	26	34	61	68	mbar
	ΔT 20°C	6	7	13	20	mbar
Water capacity		71	87	103	126	liters

⚠ The stack must guarantee the minimum draught specified by applicable technical standards, assuming zero pressure at the connection to the flue gas exhaust.

⚠ Values obtained with **RIELLO** GULLIVER BS burners with CO2 = 9,7%.

DESCRIPTION		RTQ												
		154	203	235	297	323	357	418	467	537	597	715	837	
Fuel		Gas / Oil												
Rated heat input	min	115	166	217	257	318	348	384	448	500	575	639	766	kW
	max	166	217	255	318	348	384	448	500	575	639	766	896	kW
Rated useful heat output Pn	min	109	157	203	243	297	325	358	418	466	536	596	714	kW
	max	154	203	235	297	323	357	418	467	537	597	715	837	kW
Useful efficiency at min. Pn	min	94,5	94,5	93,4	94,6	93,4	93,3	93,2	93,3	93,2	93,2	93,2	93,2	%
	max	92,9	93,4	92,3	93,4	92,8	92,9	93,3	93,4	93,4	93,4	93,4	93,4	%
Useful eff. at 30% max. Pn		91,4	93,3	92,8	93,3	93,3	93,3	93,3	93,3	93,3	93,3	93,3	93,3	%
Constant pressure drop		< 1,4						< 1,2				< 1		
Flue gas temperature (ΔT)		170÷180												°C
Flue gas mass flow rate		0,072	0,094	0,111	0,138	0,151	0,166	0,194	0,217	0,241	0,268	0,332	0,367	kg/sec
Furnace pressure		1,6	1,8	2,7	3,5	3,9	4,1	2,9	3,3	3,0	5,1	4,7	8,1	mbar
Furnace volume		91	138,4	138,4	199,1	199,1	199,1	298,9	298,9	331,3	331,3	410,5	469,8	dm^3
Tot. volume of flue gas side		163,2	234,3	234,3	317,2	317,2	325,6	457,9	457,9	528,3	528,3	676,8	768,8	dm^3
Total surface area for heat exchange		4,35	6,68	6,68	8,59	8,59	9,47	12,34	12,34	14,76	14,76	19,04	20,36	m^2
Volumetric heat load		1824	1568	1842	1597	1748	1928	1499	1673	1736	1929	1866	1816	kW/m^3
Specific heat load		35,5	30,3	35,2	34,6	37,6	37,7	33,9	37,9	36,4	40,4	37,6	41,1	kW/m^2
Max. operating pressure		6												bar
Max. admissible temp.		110												°C
Max. operating temp.		95												°C
Min. admissible water return temp.		55												°C
Pressure drops	ΔT 10°C	32	70	97	202	258	373	280	315	140	150	455	185	mbar
	ΔT 20°C	7,5	17,5	25	48	65	93,6	70,5	74,7	42	55	109	47	mbar
Water capacity		161	291	291	268	268	258	308	308	345	345	593	565	liters

⚠ The stack must guarantee the minimum draught specified by applicable technical standards, assuming zero pressure at the connection to the flue gas exhaust.

⚠ Values obtained with **RIELLO** RL and GULLIVER RG burners with CO2 = 12,5%; RS and GULLIVER BS burners with CO2 = 9,7%.

2 INSTALLATION

2.1 Unpacking the product

RIELLO RTQ steel boilers come **in 2 separate crates**:

1 **BOILER BODY CRATE** to which is attached the documentation envelope (A) containing:
- Instruction manual;
- Data label (to be applied to the casing on completion of the installation);
- Certificate of Warranty and water test certificate;
- Bar code labels;

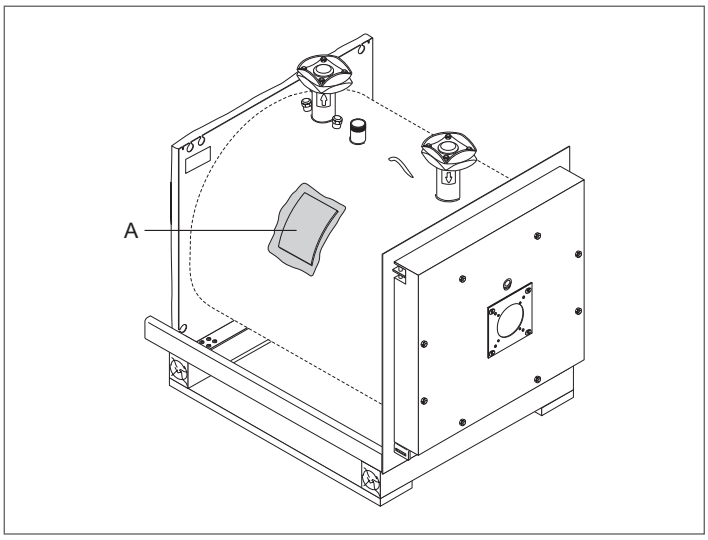

⚠ The following material, to be fitted by the installer, is located inside the combustion chamber:
- turbulators and turbulator fixing clips (for installation in the flue gas pipes);
- water connection flanges (models **RTQ** 537 to 3400 only);
- boiler body insulation and fasteners.

For fitting instructions, see the section entitled "Fitting the insulation and turbulators" on page 23.

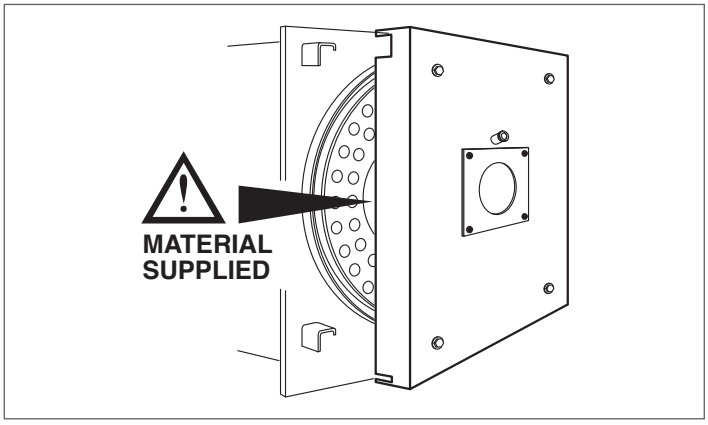

⚠ The instruction manual is an integral part of the appliance; therefore, it should be read and stored carefully.

2 **THE CASING PANELS** complete with assembly accessories (2 packs for models 537÷837).

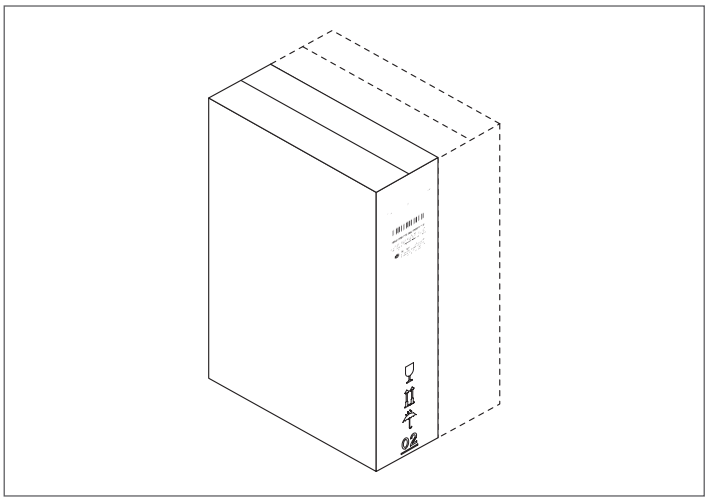

IMPORTANT
For the boiler to function correctly, it must be connected to a **RIELLO** TECH control panel and dedicated control accessories.

2.2 Overall dimensions and weights

RTQ 50÷105

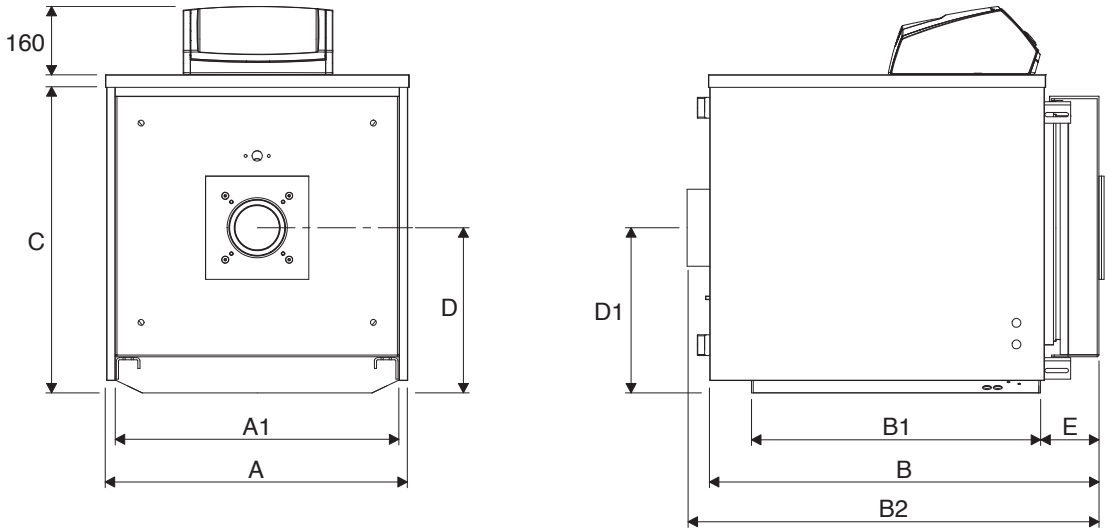

DESCRIPTION		RTQ				
		50	64	82	105	
A	Width	605	605	705	705	mm
A1	Base width	560	560	660	660	mm
B	Depth	830	980	910	1060	mm
B1	Base depth	623	773	672	822	mm
B2	Depth	885	1035	970	1120	mm
C	Height	605	605	740	740	mm
D	Burner height	310	310	384	384	mm
D1	Flue height	325	325	384	384	mm
E	Door depth	110	110	135	135	mm
Weight of boiler		119	140	177	201	kg
Weight of casing		18	20	22	24	kg

RTQ 154÷235

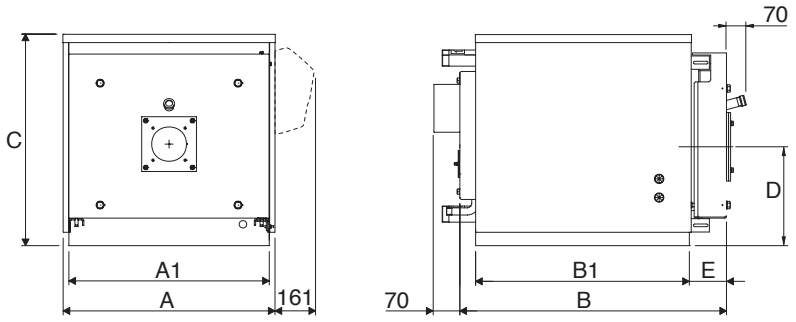

RTQ 297÷467

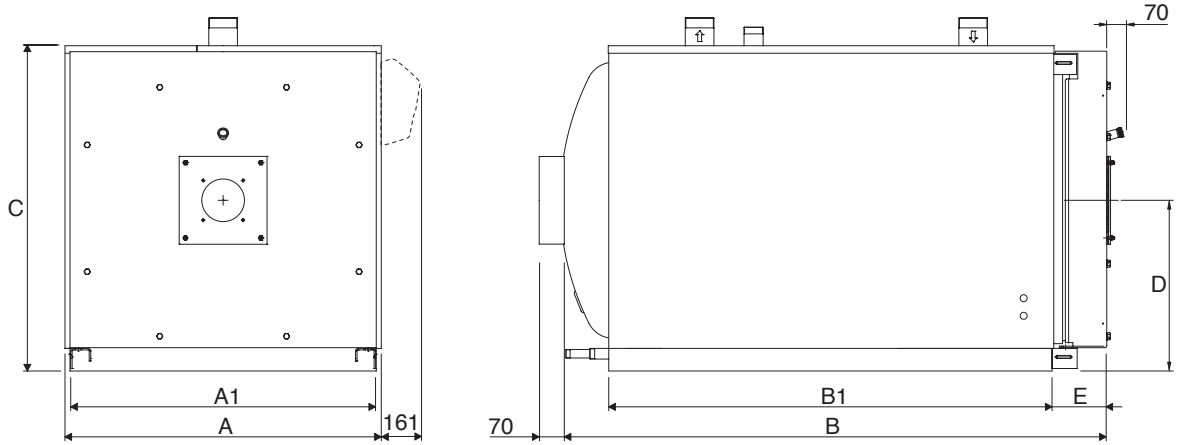

RTQ 537÷837

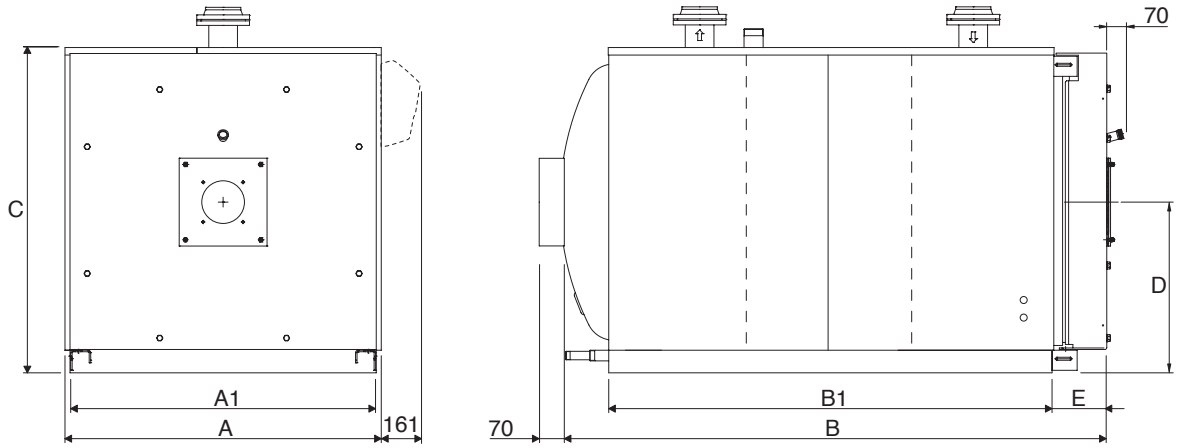

DESCRIPTION		RTQ												
		154	203	235	297	323	357	418	467	537	597	715	837	
A	Width	805	853	853	925	925	925	975	975	975	975	1150	1150	mm
A1	Base width	753	803	803	875	875	875	925	925	925	925	1100	1100	mm
B	Depth	1130	1330	1330	1480	1480	1480	1700	1700	1875	1875	2045	2140	mm
B1	Base depth	945	1110	1110	1255	1255	1255	1450	1450	1595	1595	1710	1835	mm
C	Height	790	840	840	980	980	980	1030	1030	1030	1030	1210	1210	mm
D	Burner height	410	435	435	525	525	525	550	550	550	550	655	655	mm
E	Door depth	135	145	145	150	150	150	180	180	170	170	195	195	mm
Weight of boiler		266	352	352	423	423	443	588	588	685	680	932	985	kg
Weight of casing		22	30	30	35	35	35	42	42	46	46	50	52	kg

2.3 Handling

RIELLO RTQ steel boilers are fitted with lifting attachments. Take great care when moving them and only use lifting equipment of adequate capacity.

Remove the fixing screws and remove the wooden pallet before positioning the boiler.

⚠ Wear suitable personal protective equipment and use suitable safety devices.

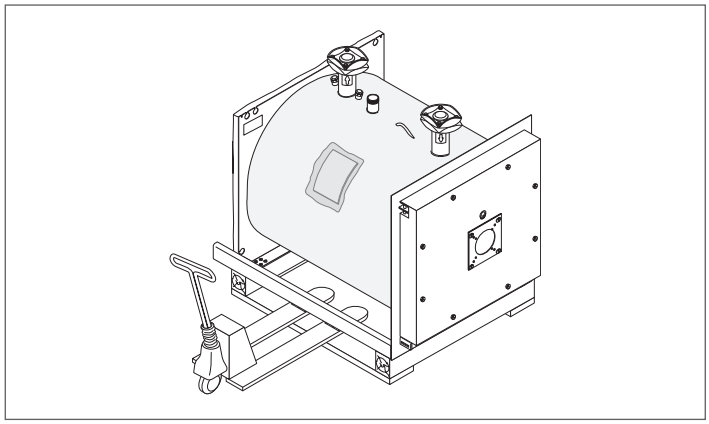

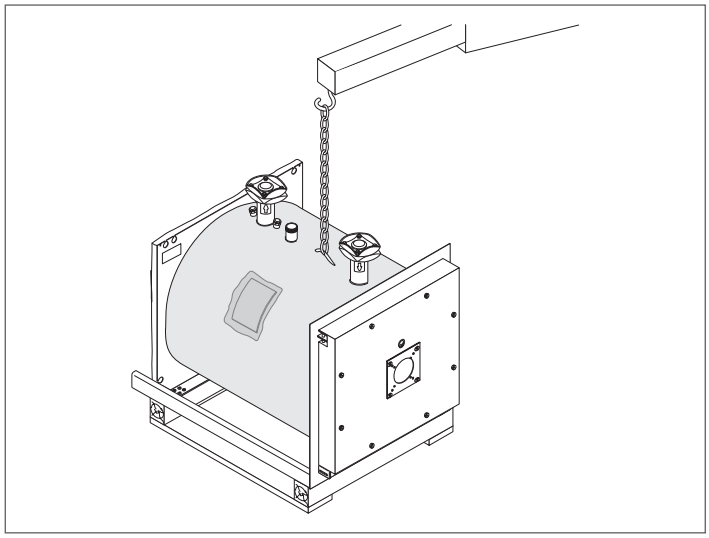

2.4 Place of installation

RIELLO RTQ steel boilers must be installed in a dedicated boiler room, with adequately sized vents, in compliance with applicable laws and standards.

If at all possible, the boiler should be installed on a raised base to prevent the burner fan sucking up dust.

⚠ When installing the boiler, allow sufficient space around it to access all safety and control devices and to permit easy maintenance.

⚠ If the specific weight of the gas supply to the burner is greater than the specific weight of air, install all electrical parts at least 500 mm above floor level.

⛔ Do not install the boiler outdoors. It is not designed to work outdoors and is not fitted with the necessary automatic anti-frost systems to do so.

2.5 Installation of low heat output boilers

RIELLO RTQ steel boilers (**RTQ** 50 to 105) can be installed in various ways:

On the floor or pedestal
The ideal solution for just heating installation.

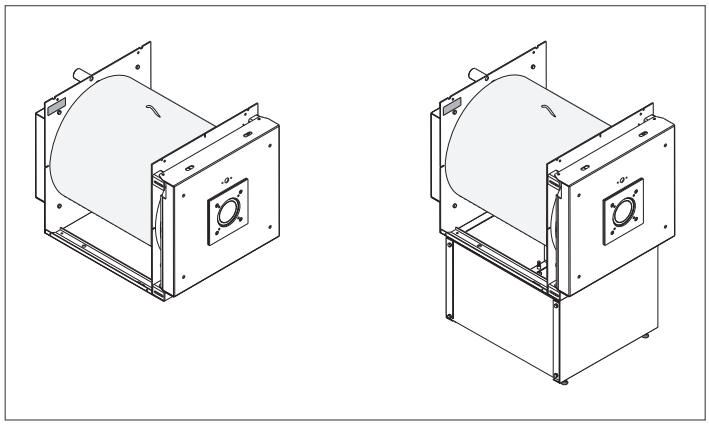

⚠ If you are installing the boiler without a pedestal, the limited gap between the burner and the floor makes it particularly important to keep the boiler room clean.

On the heater
This is more practical with a combined installation (heating and hot water.
Low heat output models (**RTQ** 50 to 105) can be installed on **RIELLO** 7300 storage cylinders, which are specially designed to support the weight of the boiler.

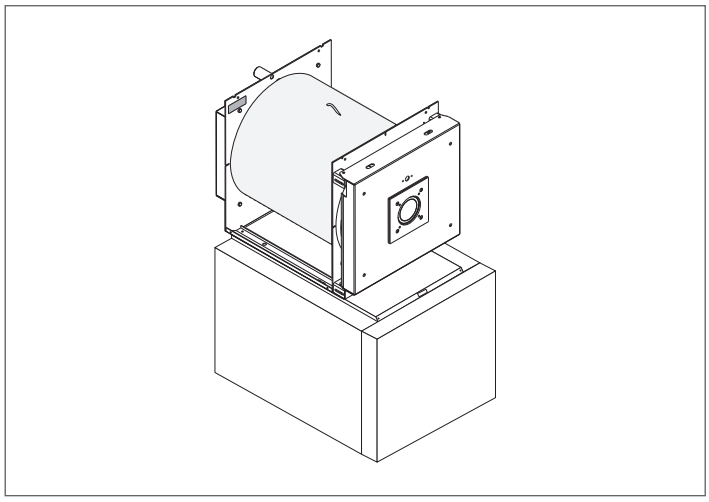

2.6 Installation in older systems and systems requiring modernisation

When installing these boilers in old systems or systems requiring modernisation, always perform the following checks:

- make sure that the stack is able to withstand the temperature of the combustion gases and that it has been designed and made in compliance with applicable standards. The stack must also be as straight as possible, sealed, insulated and not blocked or choked;
- make sure that the electrical system has been installed by a qualified electrician in compliance with applicable standards;
- make sure that the oil feed line and any oil storage tank are made and installed in compliance with applicable standards;
- make sure that the expansion vessels are big enough to contain the volume generated by thermal expansion;
- make sure that flow rate, head and direction of flow of the pumps are suitable and correct;
- make sure that the circuit has been flushed out to remove all sludge and lime scale, and has been vented and seal tested.
- make sure that a suitable water treatment system is installed if the quality of the supply/recirculation water so demands.

2.7 Water connections

RIELLO RTQ boilers are designed and made for use in central heating installations, but can also be used for domestic hot water production if connected to a suitable storage cylinder. Water fittings are as specified in the following table.

⚠ Allow for the dimensions of the control panel that needs to be installed on top of the boiler.

RTQ 50÷105

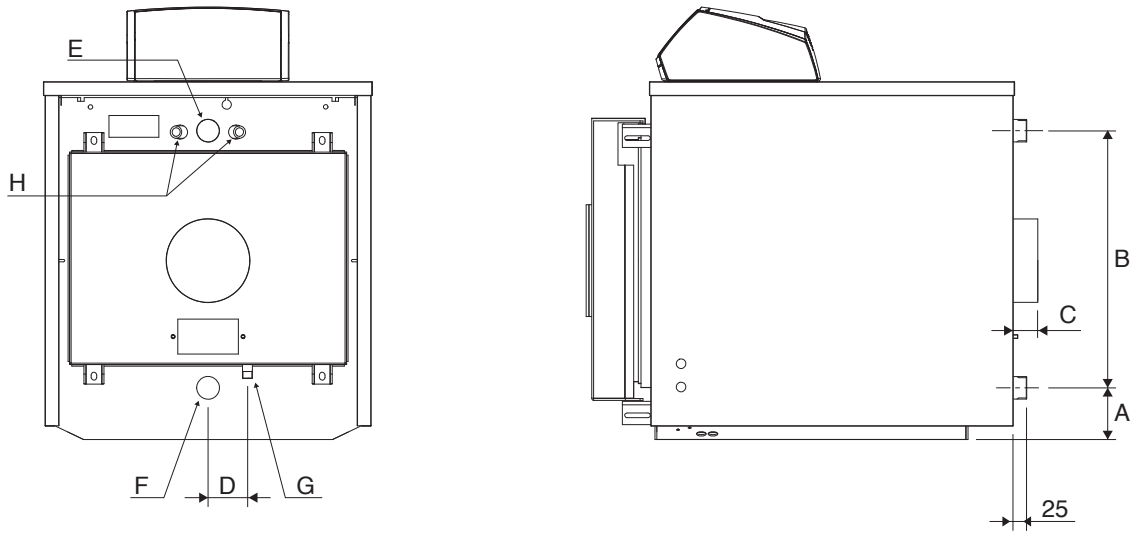

DESCRIPTION		RTQ				
		50	64	82	105	
A	Return-base distance	85	85	110	110	mm
B	Delivery/return centre to centre distance	455	455	552	552	mm
C	Flue gas discharge projection	50	50	60	60	mm
D	Del./ret. centre to centre distance condensation safety/discharge	75	75	85	85	mm
E	System delivery	1" 1/4	1" 1/4	1" 1/2	1" 1/2	Ø
F	System return	1" 1/4	1" 1/4	1" 1/2	1" 1/2	Ø
G	Flue pipe condensation discharge	1/2"	1/2"	1/2"	1/2"	Ø
H	Sensor socket	G 1/2" - Ø 16				Ø

RTQ 154÷235

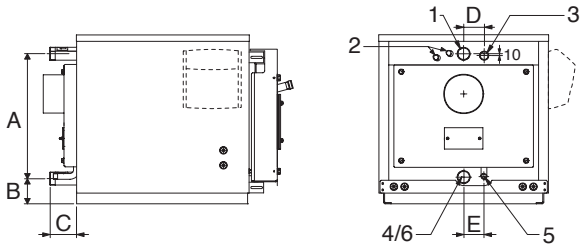

RTQ 297÷467

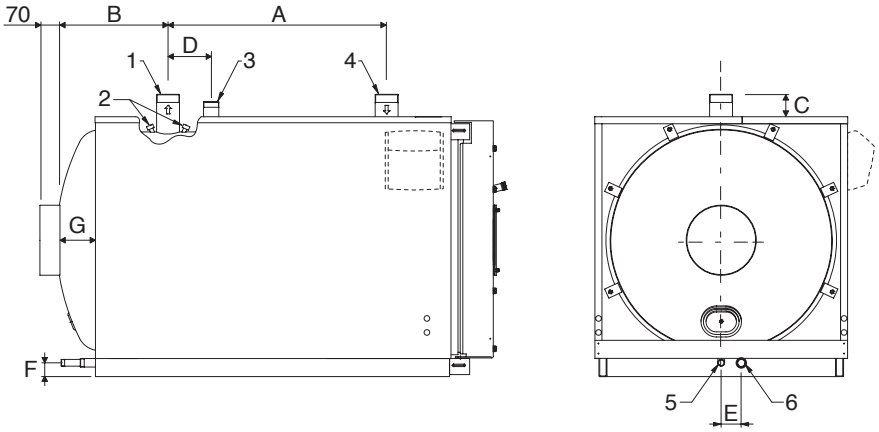

RTQ 537÷837

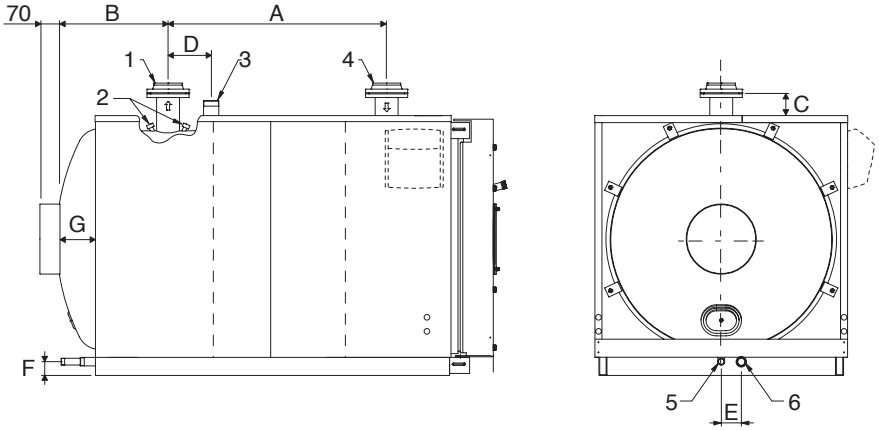

DESCRIPTION		RTQ												
		154	203	235	297	323	357	418	467	537	597	715	837	
1	Central heating flow *	G2"	G2"	G2"	G2"1/2	G2"1/2	G2"1/2	G2"1/2	G2"1/2	DN80	DN80	DN80	DN100	Ø
2	Instrument bulb / sensor socket	G1/2"	G1/2"	G1/2"	G1/2"	G1/2"	G1/2"	G1/2"	G1/2"	G1/2"	G1/2"	G1/2"	G1/2"	Ø
3	Safety device fitting	G1"1/4	G1"1/4	G1"1/4	G1"1/4	G1"1/4	G1"1/4	G1"1/4	G1"1/4	G1"1/2	G1"1/2	G1"1/2	G1"1/2	Ø
4	Central heating return *	G2"	G2"	G2"	G2"1/2	G2"1/2	G2"1/2	G2"1/2	G2"1/2	DN80	DN80	DN80	DN100	Ø
5	Condensate drain	G3/4"	G3/4"	G3/4"	G3/4"	G3/4"	G3/4"	G3/4"	G3/4"	G3/4"	G3/4"	G1"	G1"	Ø
6	Boiler drain	G2"	G2"	G2"	G1"	G1"	G1"	G1"	G1"	G1"	G1"	G1"1/4	G1"1/4	Ø
A		577	628	628	750	750	750	850	850	1000	1000	1000	1250	mm
B		124	124	124	305	305	305	395	395	400	400	480	392	mm
C		115	115	115	80	80	80	80	80	85	85	75	105	mm
D		95	110	110	205	205	205	205	205	300	300	215	300	mm
E		95	120	120	110	110	110	110	110	110	110	110	110	mm
F		-	-	-	95	95	95	95	95	95	95	95	95	mm
G		-	-	-	85	85	85	85	85	110	110	145	110	mm

(*) All flanged connections are PN6 according to EN 1092-1.

Below are given the hydraulic diagrams:

Just heating installation

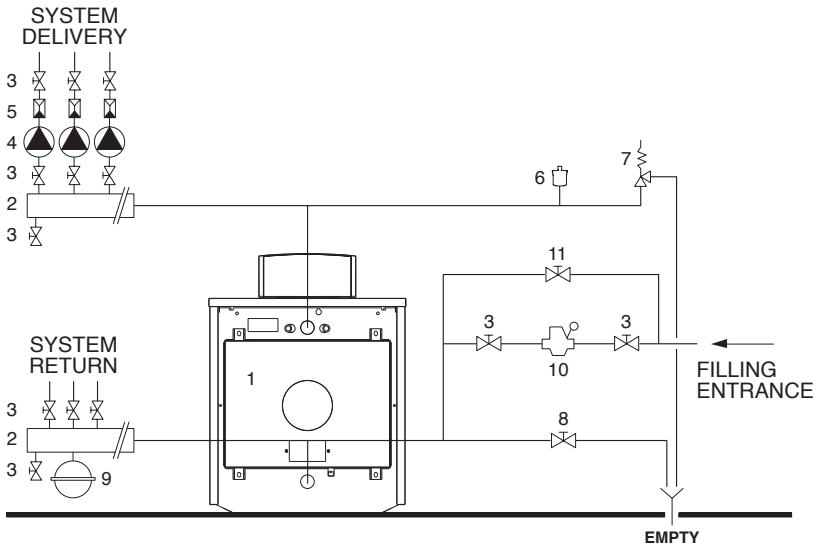

1 Boiler
2 Central heating system manifolds
3 Disconnect valves
4 System pumps
5 Non-return valves
6 Automatic vent valve
7 Boiler safety valve
8 Boiler drain cock
9 Expansion tank
10 Pressure reducer
11 Manual fast filling valve

Central heating and domestic hot water production

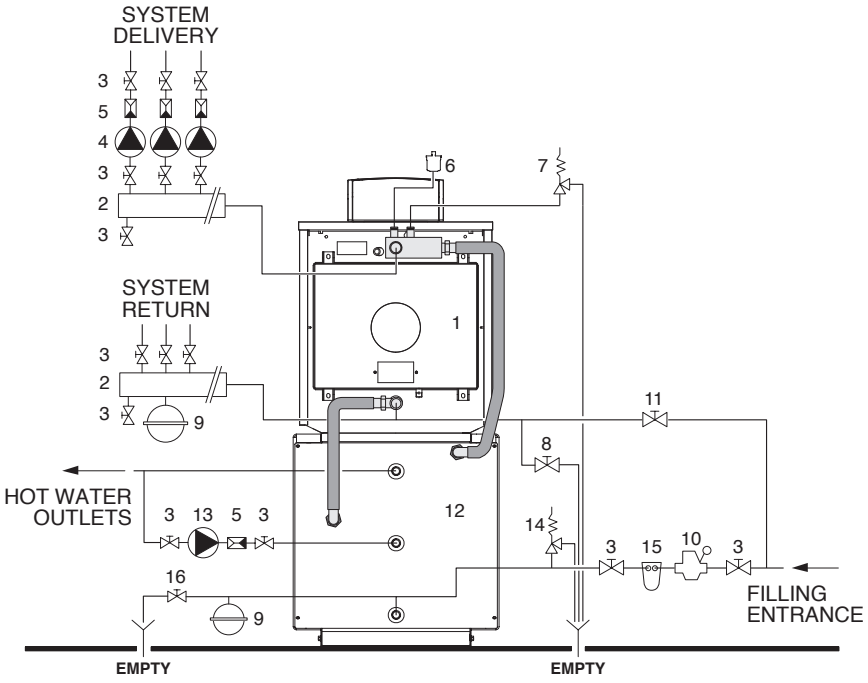

1 Boiler
2 Central heating system manifolds
3 Disconnect valves
4 System pumps
5 Non-return valves
6 Automatic vent valve
7 Boiler safety valve
8 Boiler drain cock
9 Expansion vessel
10 Pressure reducer
11 Manual fast filling valve
12 RIELLO 7300 storage cylinder
13 DHW recirculation pump
14 Boiler safety valve
15 Water softener filter
16 Storage cylinder drain cock

Central heating and domestic hot water production

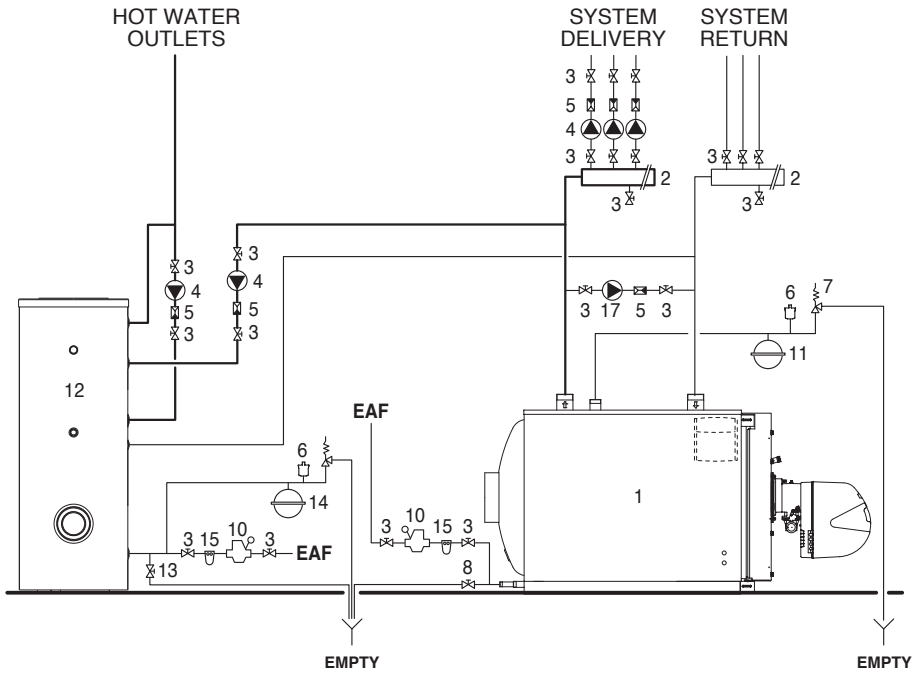

1 Boiler
2 Central heating system manifolds
3 Disconnect valves
4 System pumps
5 Non-return valves
6 Automatic vent valve
7 Boiler safety valve
8 Boiler drain cock
9 Storage cylinder safety valve
10 System filling cock
11 CH expansion vessel
12 RIELLO 7200 storage cylinder
13 Storage cylinder drain cock
14 DHW expansion vessel
15 Water softener filter
16 Pressure reducer
17 Anti-condensate pump
EAF Domestic cold water inlet

⚠ The selection and the installation of the components of the system is the responsibility of the installer, who must operate in accordance with good practice and current Legislation.

⚠ Circuits filled with anti-freeze must be fitted with water disconnectors.

⚠ If needed, water supplies and recovery circuits must be conditioned by suitable treatment systems. See the table alongside for reference values.

REFERENCE VALUES	
pH	6-8
Electrical conductivity	less than 200 µS/cm (25°C)
Chlorine ions	less than 50 ppm
Sulphuric acid ions	less than 50 ppm
Total iron	less than 0.3 ppm
Alkalinity M	less than 50 ppm
Total hardness	less than 35°F
Sulphur ions	none
Ammonia ions	none
Silicon ions	less than 30 ppm

2.8 Anti-condensate pump

An anti-condensate pump operates during periods of no heat request to avoid damage until the boiler returns to a stable operating temperature. While the system is operating, this pump must guarantee a flow rate between 20 and 30% maximum flow to ensure a water return temperature no lower than 55 °C. Pump shutdown must also be delayed for at least 3 minutes at the beginning of extended periods of boiler shutdown (overnight or weekend shutdown etc.).

⚠ A sensor socket must be positioned at a distance of 3 to 5 times the diameter of the water return pipe, upstream from the water fitting, to measure effective water return temperature and control the anti-condensate pump or the temperature controller stabilisation function.

⚠ Any temperature controllers installed remotely from the control panel must be compatible with the system's electrical connections and functioning logic.

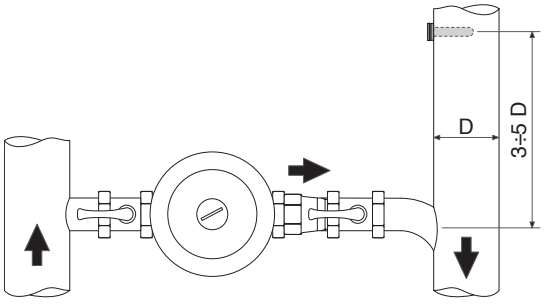

2.9 Discharge of combustion products

The flue gas exhaust and stack connection must be made in compliance with applicable laws and standards, using heat resistant, condensate resistant and stress resistant rigid pipe and sealed joints.

DIMENSIONS (mm)	RTQ							
	50	64	82	105	154	203	235	297
Ø	139	139	179	179	180	180	180	200
H1	325	325	384	384	500	525	525	525
H2 (with storage cylinder)	950	950	1010	1010	–	–	–	–

DIMENSIONS (mm)	RTQ							
	323	357	418	467	537	597	715	837
Ø	200	200	250	250	250	250	300	300
H1	525	525	550	550	550	550	655	655
H2 (with storage cylinder)	–	–	–	–	–	–	–	–

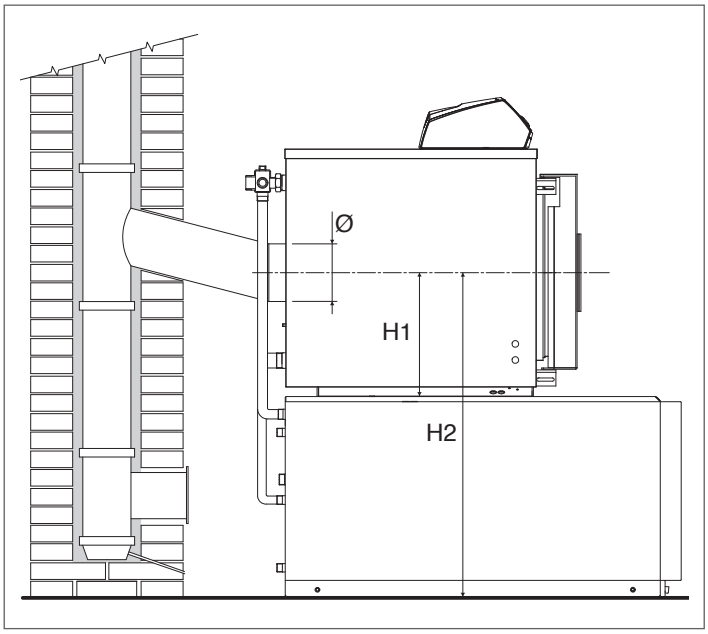

⚠ The stack must guarantee the minimum draught specified by applicable technical standards, assuming zero pressure at the connection to the flue gas exhaust. Draught at the stack must not exceed 0.2 mbar. Fit a draught limiter if draught exceeds this value.

⚠ Uninsulated flues are potentially dangerous and can cause burns.

⚠ The connection between the horizontal section of flue and the vertical stack must be either straight or at an angle of no more than 45°.

⚠ Inadequate or badly dimensioned stacks and exhausts can increase combustion noise, cause condensation problems and affect combustion parameters.

⚠ Joints must be sealed using materials capable of withstanding temperatures of at least 200°C (e.g. filler, mastic or silicone based sealant).

⚠ If more than one boiler is installed in the same utility room, separate flues must be provided for each boiler. If this is not possible, the burners should definitely be equipped with automatic closing of the air damper.

2.10 Door hinges

Boilers are fitted with three door hinge points in the factory. The doors are initially fitted to open to the right. If you need to change the door to open to the left, make the necessary modifications before performing any tests that require the boiler door to be opened. Proceed as instructed below to change the direction of door opening.

⚠ Once you have decided on the direction of door opening and the door opens successfully, remove the unused hinge assembly B.

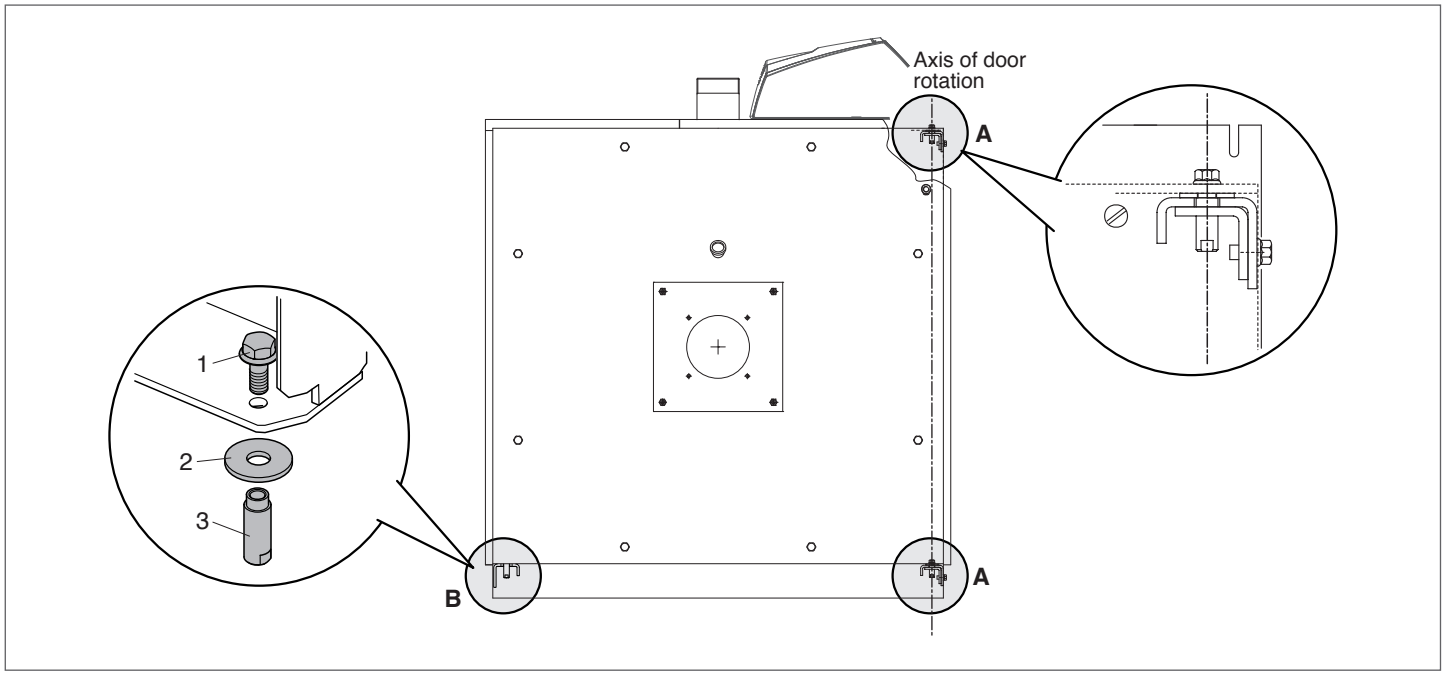

2.11 Changing the direction of door opening

⚠ Perform this operation before starting the boiler up for the first time and before opening the door.

⚠ If the door is not properly supported on its hinges, equipment capable of supporting its entire weight must be used to move it (see the table on page 13) and using suitable safety equipment.

If you wish to modify the door to open to the left, i.e. with the hinges on the left, proceed as follows:

⚠ Make sure that the main door fixing bolts (1) are securely tightened;
- remove the top safety bolts (2) and the door stop bracket (3);
- remove the bottom safety bolts (4) and the door stop bracket (5);

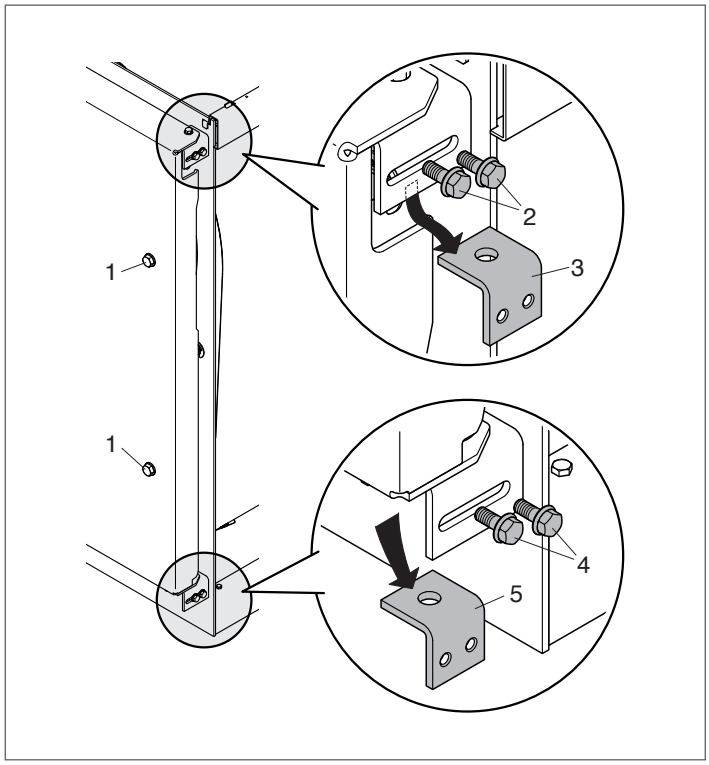

- insert a spanner through the slot in the side of the top door mounting bracket and hold the bushing (8) steady;
- unscrew the top bolt (6), then remove the bushing (8) and washer (7);

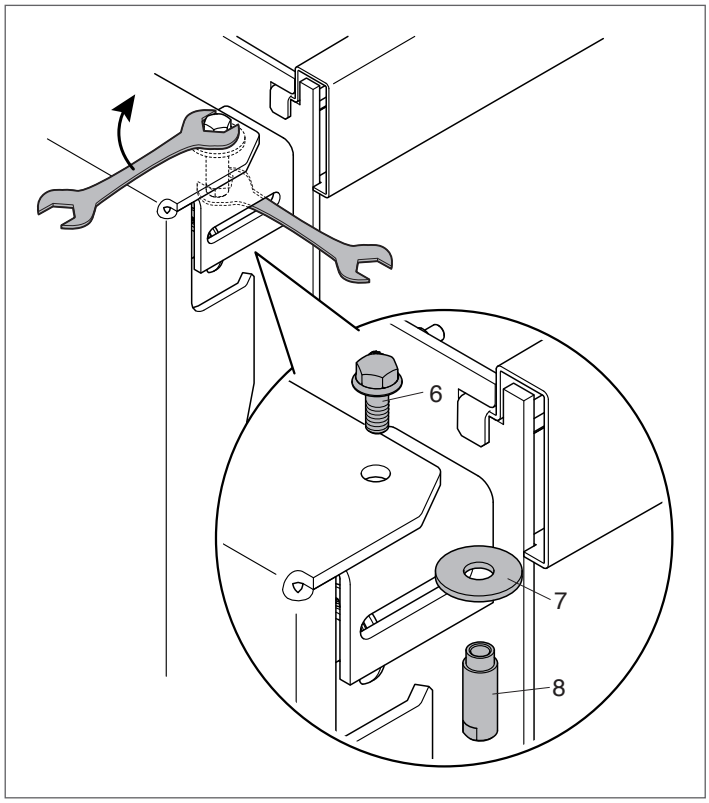

- fit the bushing (8), bolt (6) and washer (7) to the opposite side of the door.

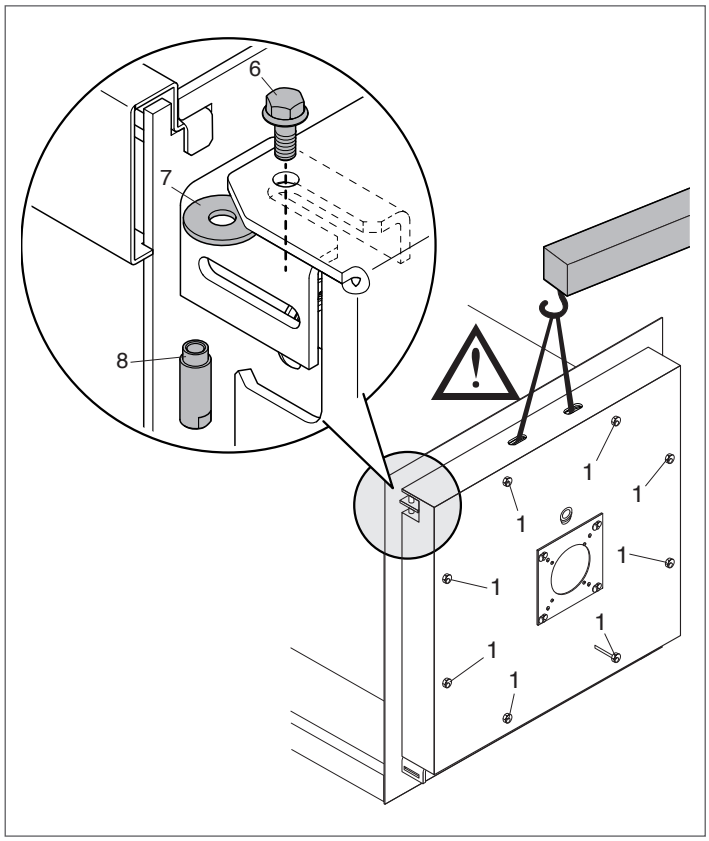

⚠ If it proves difficult to fit the washer (7) or screw the bolt (6) into the bush (8) because the door is not accurately aligned, **attach a hoist of adequate lifting capacity to the door** (see the weights and dimensions table), **slightly loosen** the fixing bolts (1) and lift the door just enough to fit the washer (7) or align the hole in the door with the hole in the hinge. **Once the bolt (6) has engaged the bush, re-tighten the door fixing bolts (1).**

- Fit the top door stop bracket (3) to the opposite side of the door and fix it in place with the safety bolts (2);
- fit the bottom door stop bracket (5) to the opposite side of the door and fix it in place with the safety bolts (4).

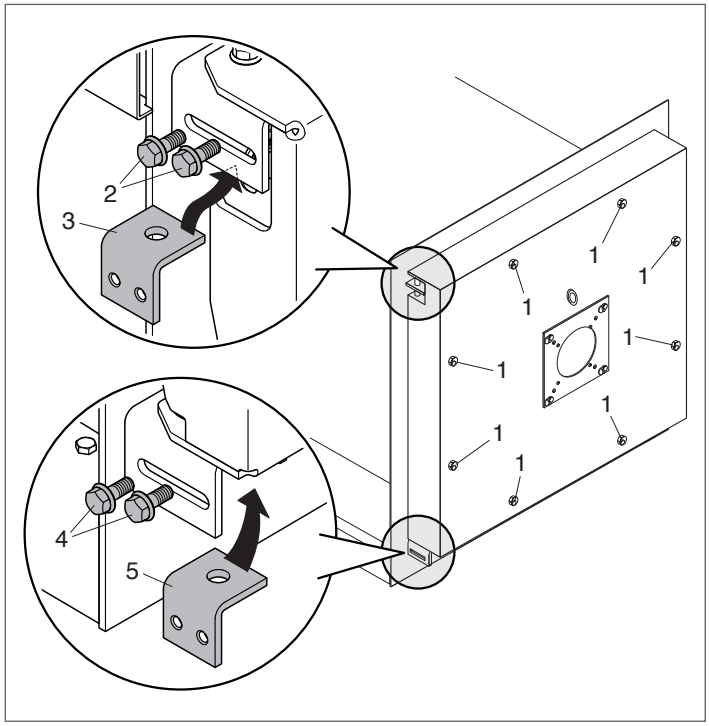

⚠ Make sure that the safety bolts (2 and 4) are securely tightened before attempting to open the door.

- Completely unscrew the main fixing bolts (1) and open the door (these bolts are captive in the door and cannot be removed);
- remove the spare hinge assembly 'B' [bolt (9), bushing (10), and washer (11)] opposite the hinged side of the door.

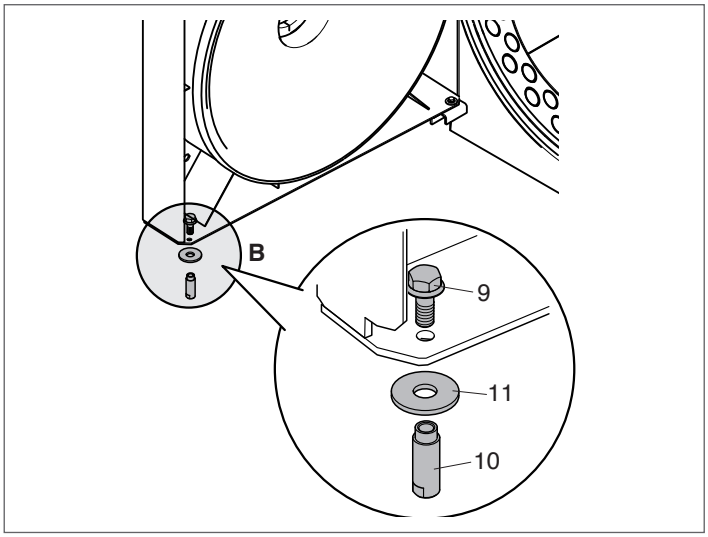

2.12 Fitting the insulation and turbulators

For MODELS RTQ 297÷837

Open the door and remove the insulation.

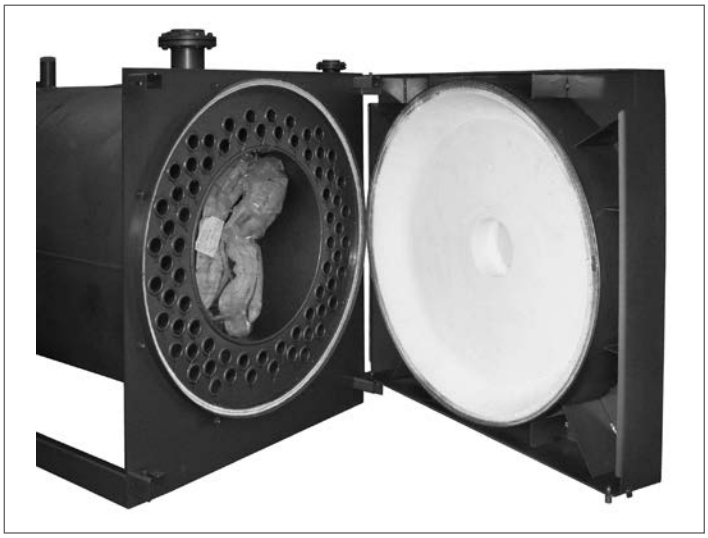



Fit the insulation over the rear of the combustion chamber first, wrapping it around as shown in the figure.

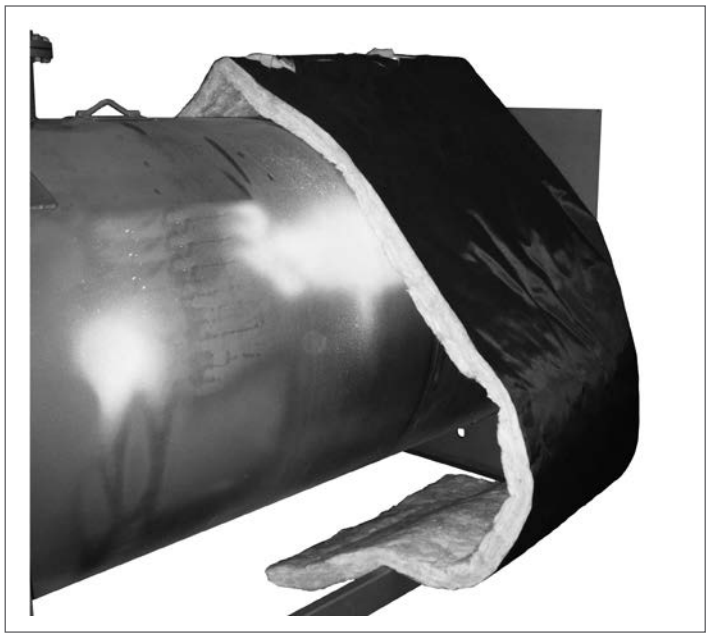

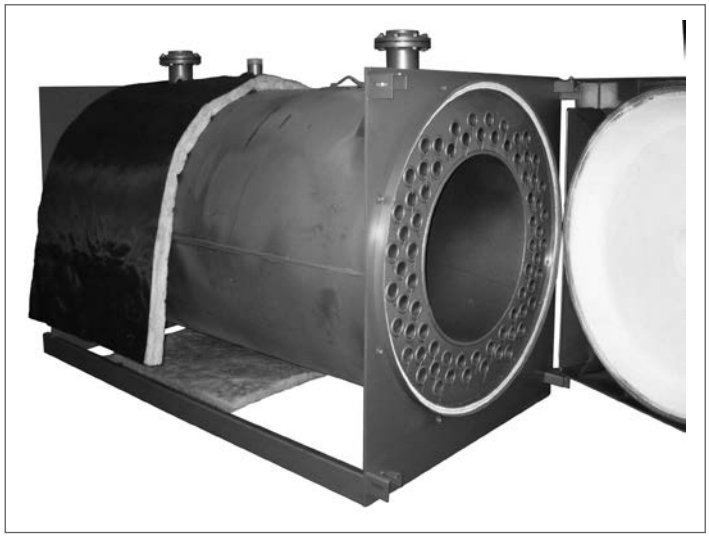

Then fit the insulation over the front.

Hold the insulation in place with the clips provided.

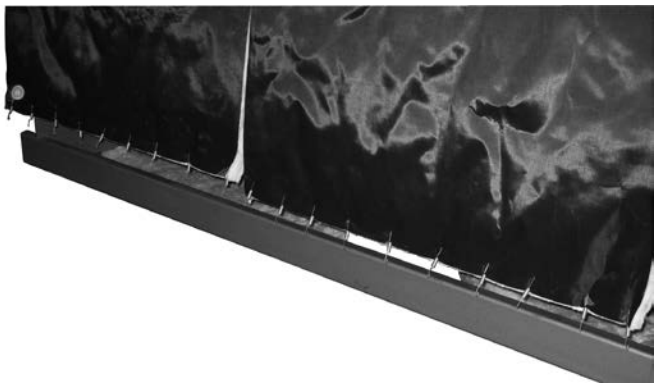





For ALL MODELS

Fit the fixing clips on the turbulators and push the turbulators into the flue gas pipes until the clips make contact.

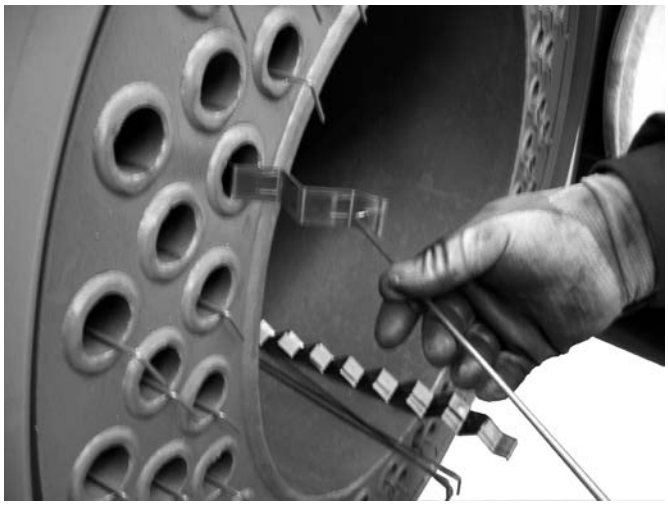

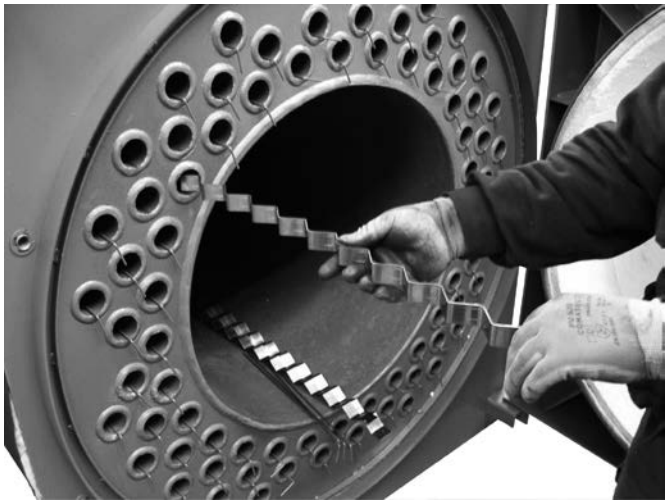



2.13 Earth connection

A terminal is provided on the front boiler head to connect the boiler body to an efficient earth system.

Proceed as follows.
- Unscrew the nut and washer (1) from the earth terminal;
- Attach the earth cable's eye connector (2) to the terminal (make sure that the cable is of adequate size and complies with legislation in the country of installation);
- Fit the nut and washer (1) to the earth terminal and tighten the nut;
- Connect the other end of the cable to the system's earth bar.

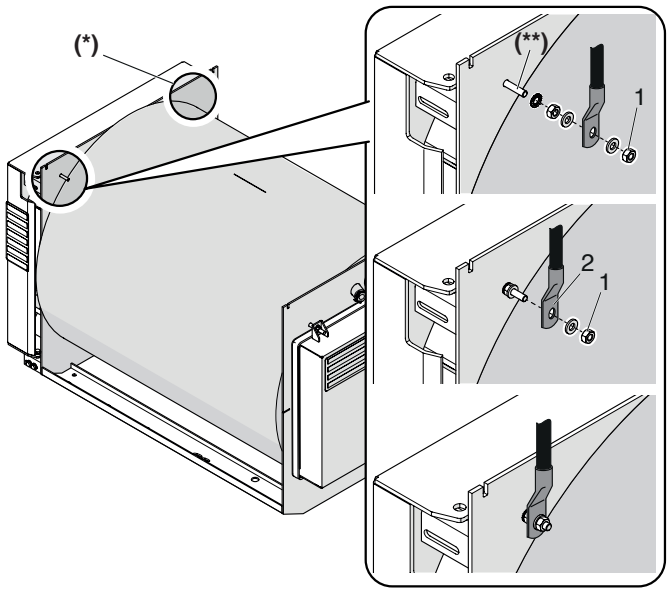

(**) **M6x30 brass**

⚠ Another hole (*) in the left side of the boiler head can also be used to earth the appliance. If you wish to use this hole for the earth connection, remove the terminal fittings from the right of the head and move them to the left earthing point.

2.14 Fitting the casing panels

- Engage the bottom of the side panels (1) in the bottom rails (2) and engage the top lip of the side panels in the slots (A) in the front and rear heads;
- fit your chosen control panel on the top panel (4) as instructed in the control panel's own instruction manual;
- route the electrical cables and insert the bulbs/sensors in their sockets;
- fit the cable grommets provided into their seats in the panels;
- fit the top panel (4) to close the top of the boiler.

RTQ 50÷105

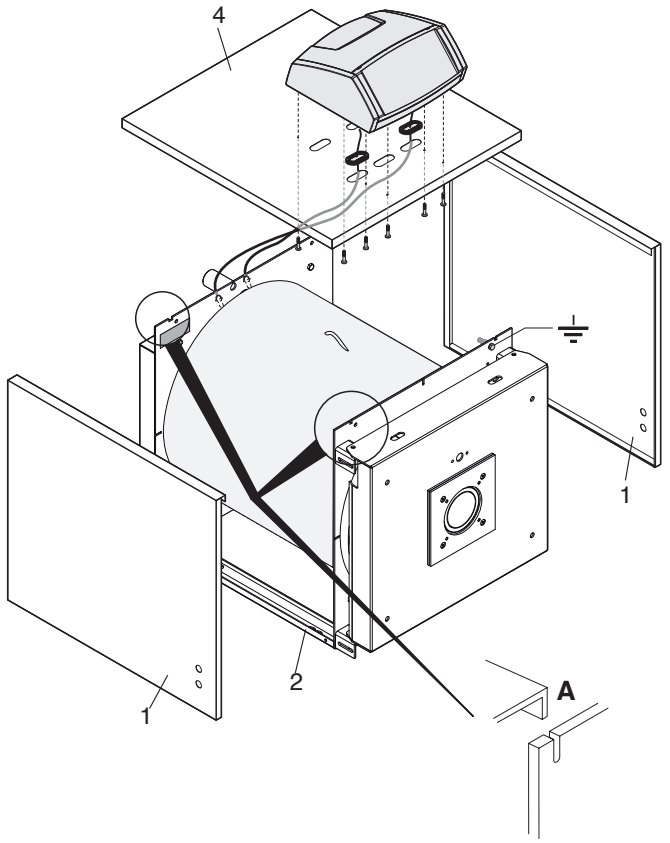

⚠ Refer to the instruction manuals your chosen control panel and burner.

- Engage the bottom of the side panels (1) in the bottom rails (2) and engage the top lip of the side panels in the slots (A) in the front and rear heads;
- secure the side panels in place with the top cross beam (3) and the screws provided;
- fit your chosen control panel on the top panel (4) as instructed in the control panel's own instruction manual;
- route the electrical cables and insert the bulbs/sensors in their sockets;
- fit the cable grommets provided into their seats in the panels;
- fit the top panel (4) to close the top of the boiler.

RTQ 154÷235

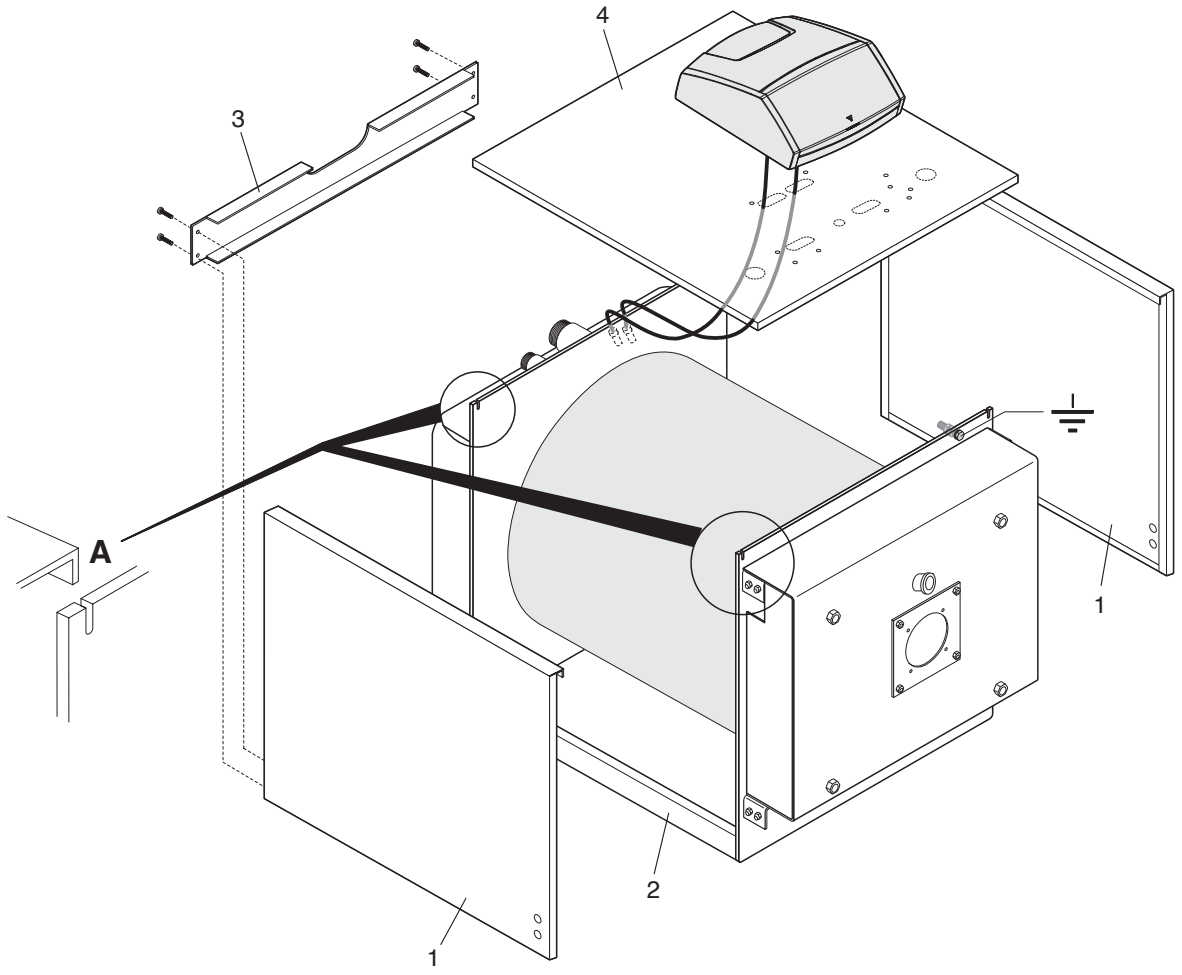

⚠ Refer to the instruction manuals your chosen control panel and burner.

- Engage the bottom of the side panels (1) in the bottom rails (2) and engage the top lip of the side panels in the slots (A) in the front and rear heads;
- secure the side panels in place with the top cross beam (3) and the screws provided;
- fit your chosen control panel on the top panel (4) as instructed in the control panel's own instruction manual;
- route the electrical cables and insert the bulbs/sensors in their sockets;
- fit the cable grommets provided into their seats in the panels;
- fit the top panels (4), (5) and (6) to close the top of the boiler.

RTQ 297÷467

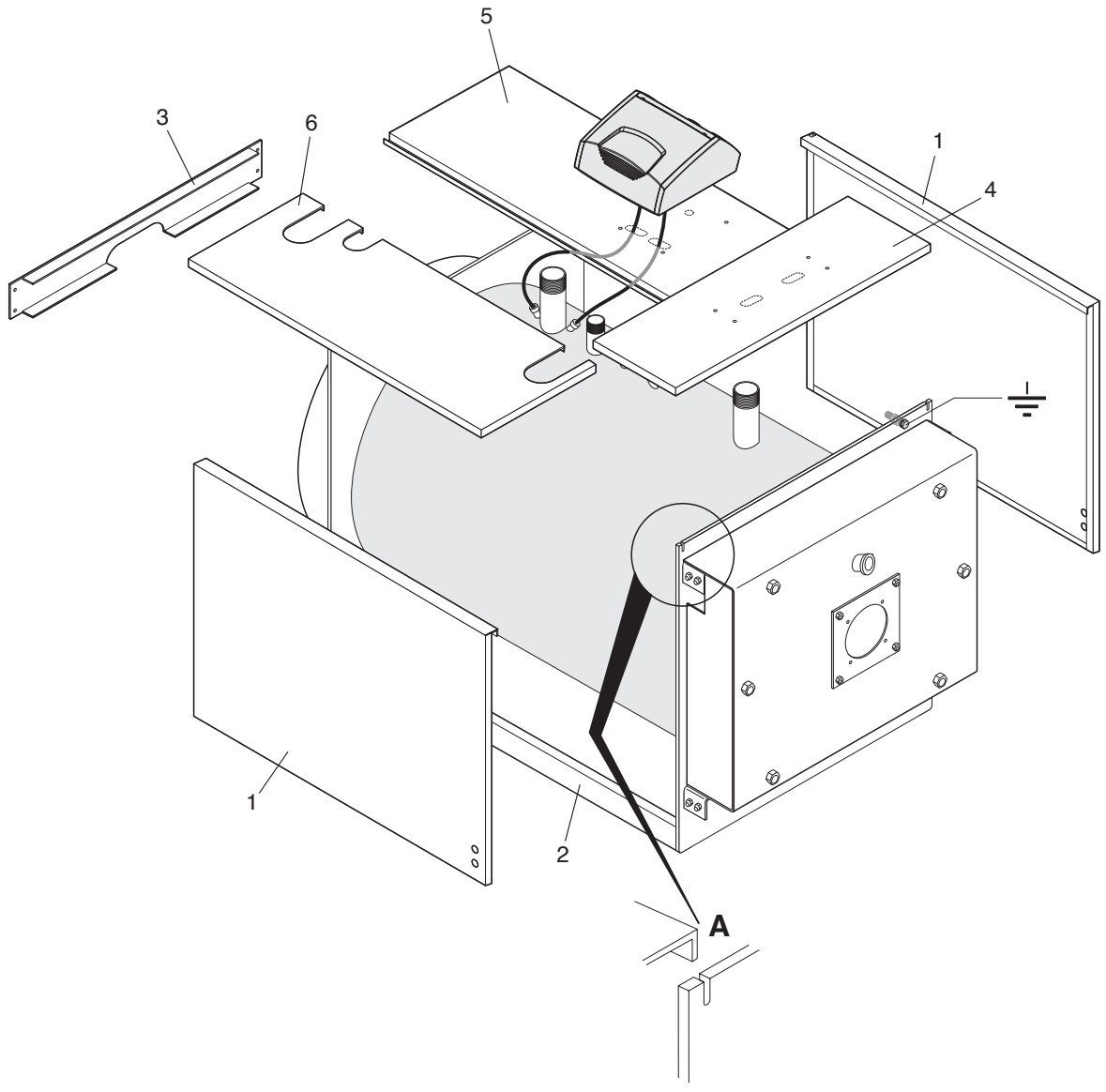

⚠ Refer to the instruction manuals your chosen control panel and burner.

- Engage the bottoms of the rear side panels (1) and front side panels (2) in the bottom rails (3) then hook their top lips over the top rails (4), running between the front and rear heads;
- secure the side panels in place with the top cross beam (5), and the screws provided;
- fit your chosen control panel on the top panel (6), as instructed in the control panel's own instruction manual;
- route the electrical cables and insert the bulbs/sensors in their sockets;
- fit the cable grommets provided into their seats in the panels;
- fit, in this order, the rear top panel (6) and (7) and the central panel (8), to close the top of the boiler.

RTQ 537÷597

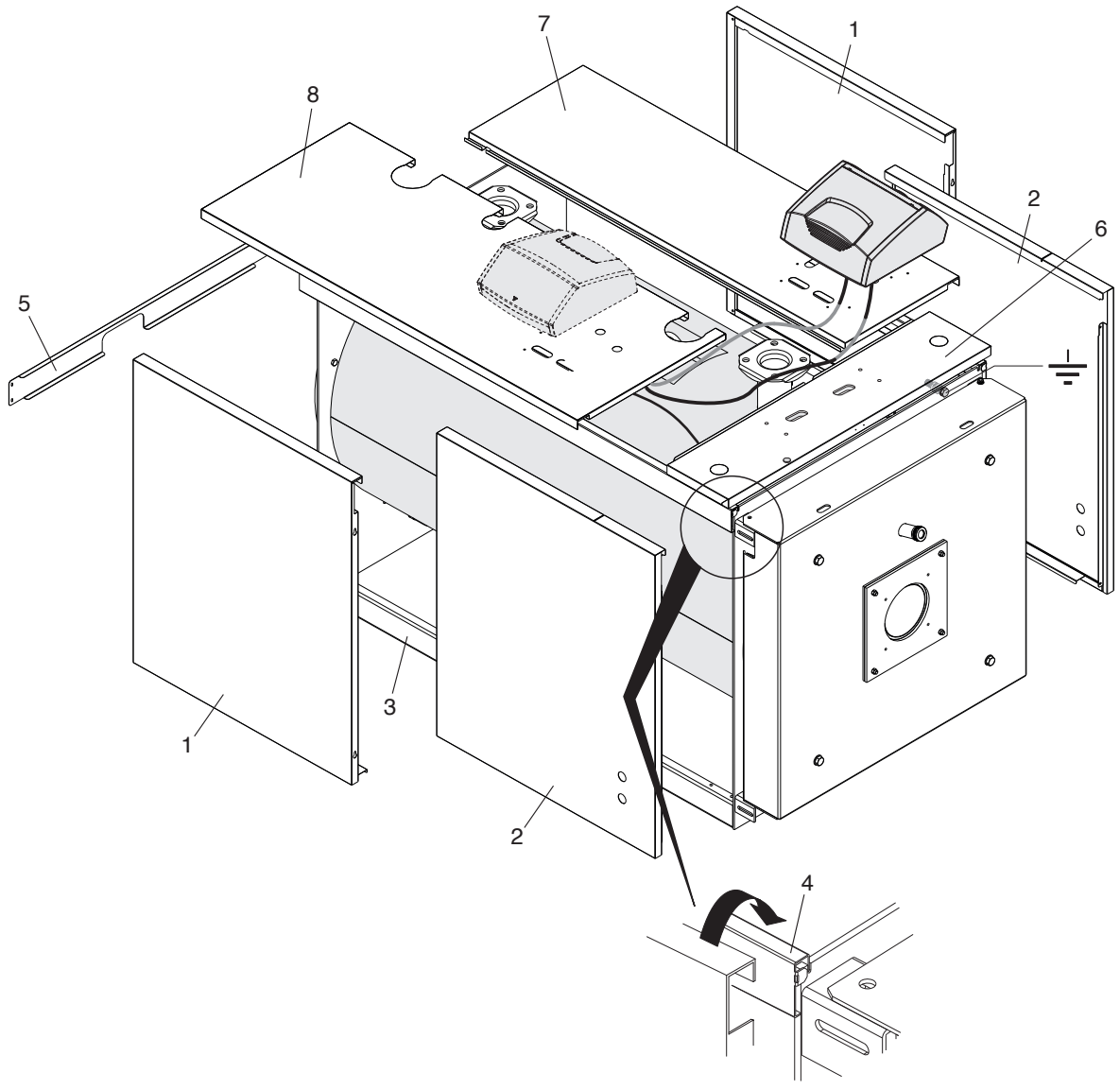

⚠ Refer to the instruction manuals your chosen control panel and burner.

- Engage the bottoms of the rear side panels (1) and front side panels (2) in the bottom rails (3) then hook their top lips over the top rails (4), running between the front and rear heads;
- secure the side panels in place with the top cross beam (5), and the screws provided;
- fit your chosen control panel on the top panel (6), as instructed in the control panel's own instruction manual;
- route the electrical cables and insert the bulbs/sensors in their sockets;
- fit the cable grommets provided into their seats in the panels;
- fit, in this order, the rear top panel (7) and (8) and the central panel (9), to close the top of the boiler.

RTQ 715÷837

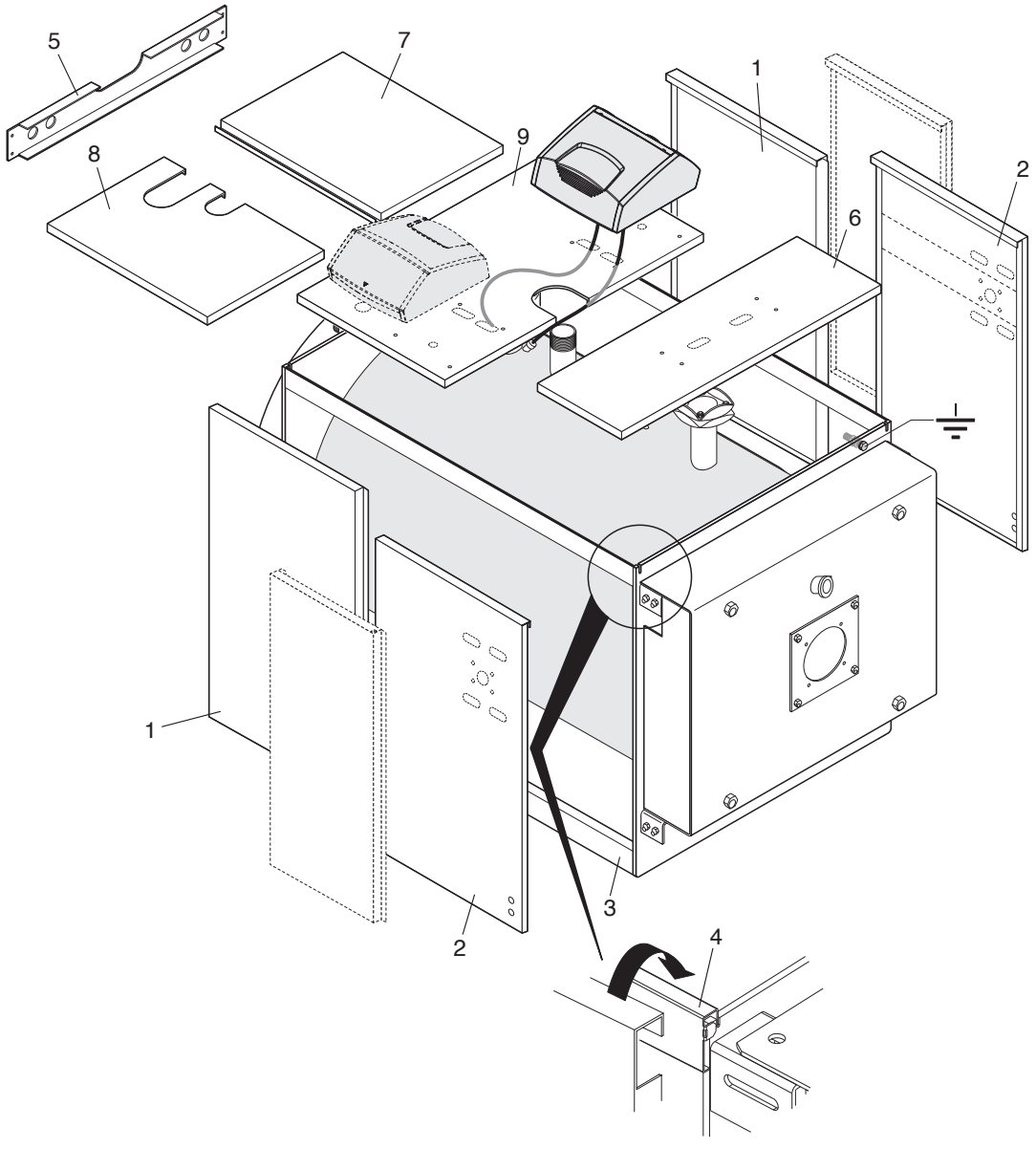

⚠ Refer to the instruction manuals your chosen control panel and burner.

2.15 Preparing for initial startup

It is essential to perform the following checks before starting up or testing the functioning of your **RIELLO RTQ** boiler. In particular, check that:

- the protective cardboard sheet (1) has been removed from the ceramic fibre;

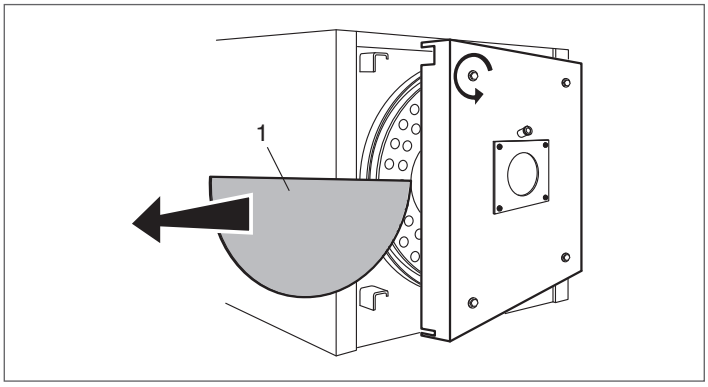

- the turbulators (2) are correctly positioned (vertical position) inside the heat exchanger tubes and the clips (3) are resting against the wall (4) of the heat exchanger;

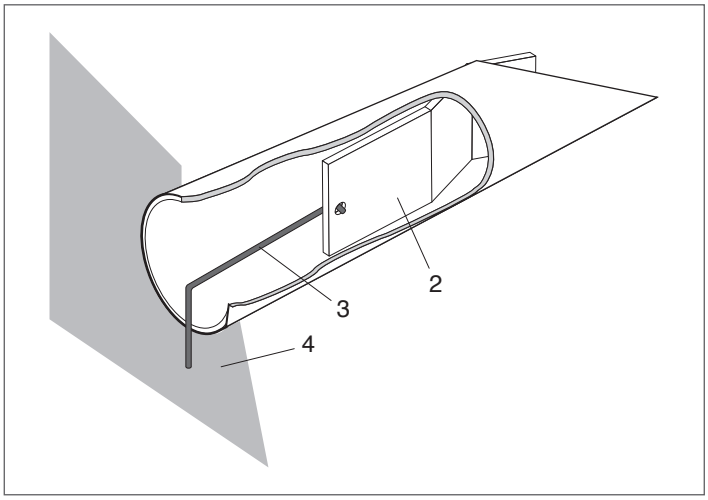

- the water and gas cocks are open;

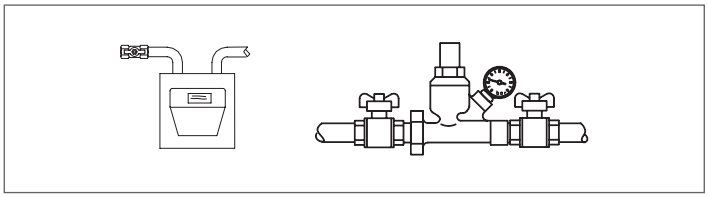

- there is an adequate fuel supply;

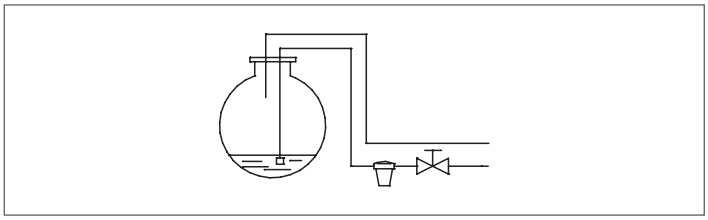

- the expansion vessel is properly charged;

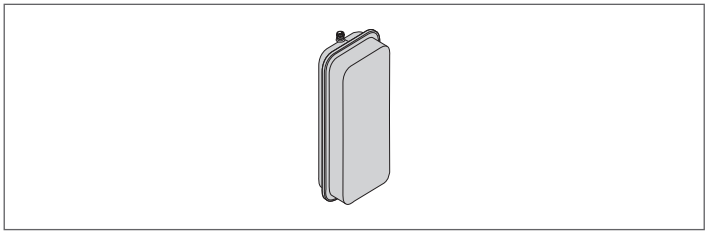

- the working pressure in the water circuit is over 1 bar but below the maximum limit specified for the boiler;
- the water circuits have been properly bled;

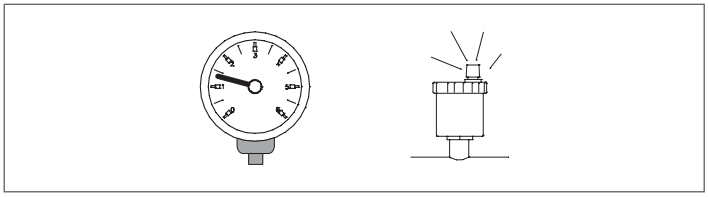

- the mains power connections to the boiler and its accessories (burner, pump, control panel, thermostats, etc.) have been properly made.

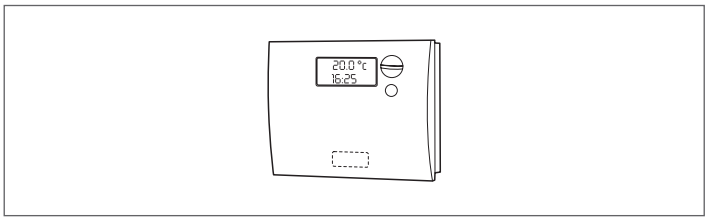

⚠ The phase-neutral polarity has been respected.

⚠ A ground (earth) connection is obligatory.

2.16 Initial startup

Once you have completed all the preparatory steps, proceed as follows to start up the boiler for the first time:

- turn the system's main power switch ON;
- if the system is equipped with a temperature controller or timer thermostat, make sure that it is switched on;

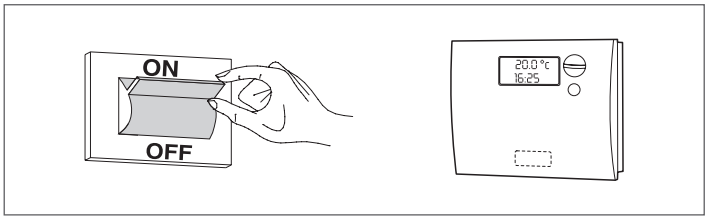

- turn the control panel power switch ON and make sure that the green power indicator lights;

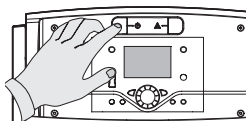

CLIMA TOP / COMFORT

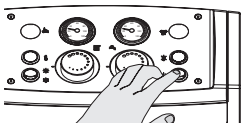

PRIME / ACS

- make the necessary settings as instructed in the instruction manual for your control panel;

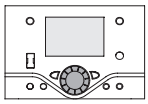

CLIMA TOP / COMFORT



PRIME / ACS

- adjust the timer thermostat/s or temperature controller to the desired temperature (~20°C);

The burner should now ignite and remain in operation until the set temperature is reached.

Subsequent starts and stops will be made automatically according to the desired temperature without the need for further intervention.

If any ignition faults or malfunctions occur, the burner performs a "LOCKOUT SHUTDOWN". This is shown by the red button light on the burner and by the warning light on the control panel.

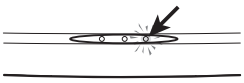

CLIMA TOP / COMFORT

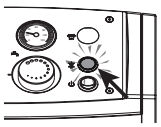

PRIME / ACS

⚠ If a "LOCKOUT SHUTDOWN" occurs, wait about 30 seconds before resetting the burner.

To reset the burner, press the red button light on the burner and wait until the flame ignites.
This operation can be repeated 2 or 3 times at the most. If the problem still persists after that, check:

- all checks listed in the burner's own instruction manual;
- all steps listed in the 'Preparing for Initial Start-up' section;
- all the electrical connections shown on the control panel wiring diagrams.

If the problem persists, check that the safety thermostat has not tripped.

⚠ If the safety thermostat trips, the boiler shuts down and a warning is displayed on the control panel (if present).
Proceed as follows to reset the safety thermostat.

- Wait until boiler temperature falls below 80°C.
- Remove the safety thermostat cover.
- Press the manual reset button.
- Wait for the complete ignition cycle to be repeated and for the flame to ignite.

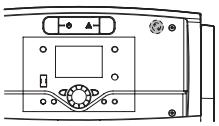

CLIMA TOP / COMFORT

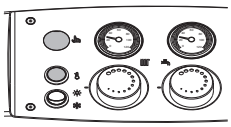

PRIME / ACS

2.17 Checks during and after initial start-up

Once the boiler has started up, make sure that it shuts down and re-starts properly when the following actions are taken:

- the boiler thermostat setting is changed

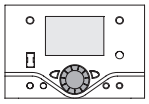

CLIMA TOP / COMFORT



PRIME / ACS

- power to the control panel is switched off and on again
- the room thermostat or timer thermostat is adjusted.

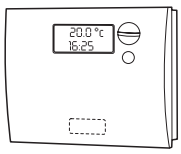

Check that there are no leaks from around the door seal. If there is any leakage of combustion gases, adjust the door as instructed on page 33.

Make sure that all the pumps in the system are free and rotate in the right direction.

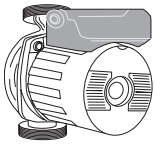

Turn off the main power switch to the boiler and make sure that the boiler shuts down properly.

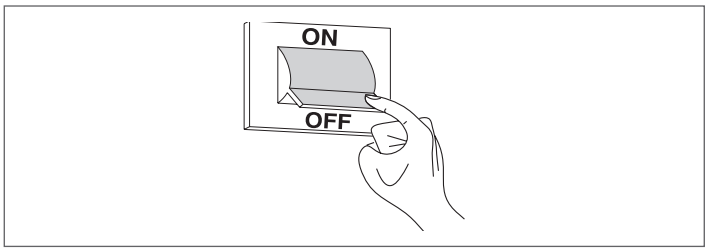

Provided all the above conditions are satisfied, start the boiler up again, then analyse the combustion fumes, measure fuel flow and re-check the door seal.

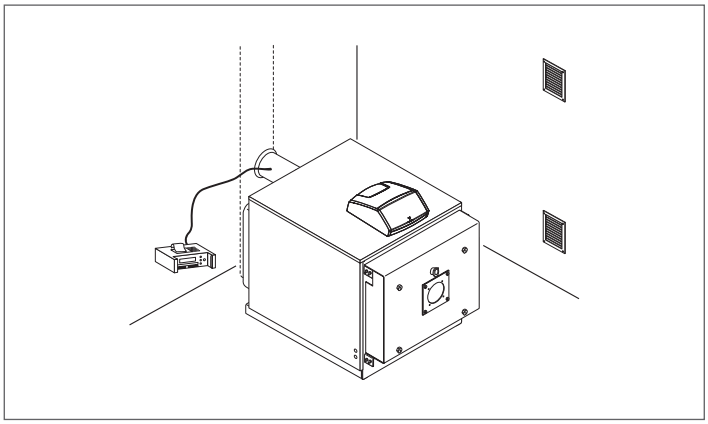

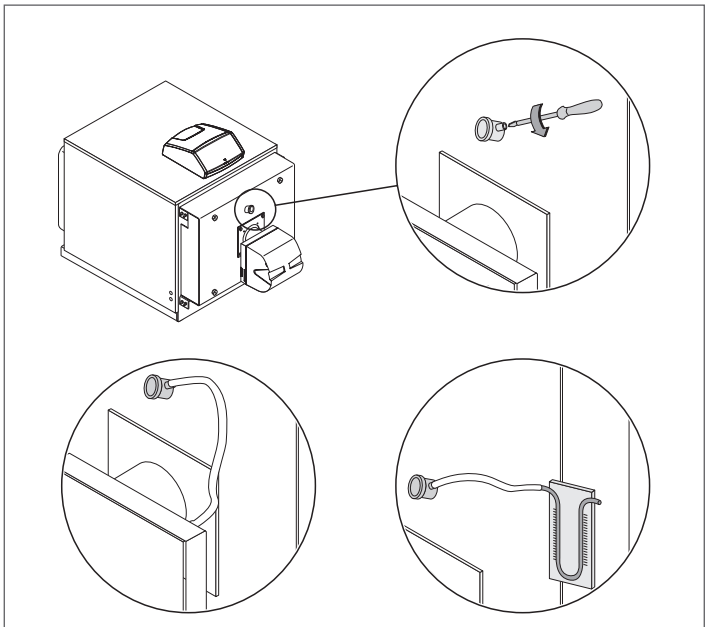

Flame inspection window cooling **Pressure measurement point**

⚠ A rubber socket is attached to the flame inspection window. If this is used as a pressure measurement point, leave the screw in place in order to close off the pressure measurement line during normal boiler functioning. If the rubber socket is used to cool the flame inspection window, remove the screw to ensure an adequate air flow.

2.18 Maintenance

Regular maintenance is a legal requirement. It is also essential for the safety, efficiency and durability of the boiler. Proper maintenance keeps consumption and emissions down, and ensures that the boiler continues to operate reliably over time.
Have your boiler serviced either by **RIELLO**'s Technical Assistance Service or by a qualified heating engineer.
Analyse the combustion fumes before commencing any maintenance. The results of fume analysis can give a clear idea of what servicing or repairs are needed.

- Turn the system's main power switch OFF
- Close all the gas cocks.

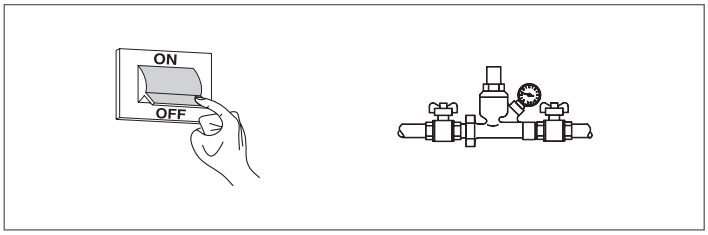

OPENING THE DOOR

- Make sure that the top safety bolts (2) and bottom safety bolts (3) on the hinged side of the boiler are tight;
- completely unscrew the main fixing bolts (1) and open the door (these bolts are captive in the door and cannot be removed).

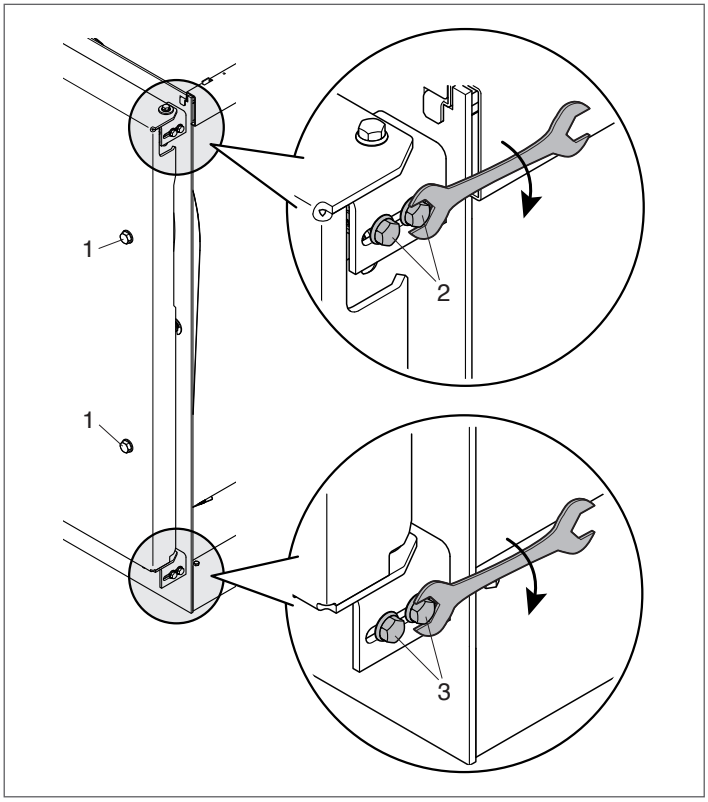

⚠ Make sure that the door is properly adjusted after every maintenance operation.

ADJUSTING THE DOOR

Make quite sure that the door presses uniformly all around the double seal to prevent dangerous fumes escaping into the air from the pressurized furnace. Proceed as follows to adjust the door seals:

- push the door shut and tighten the main fixing bolts (1) until the seals start to compress;
- loosen the safety bolts (2 and 3) then fully tighten the main door fixing bolts (1);
- re-tighten the safety bolts (2 and 3).

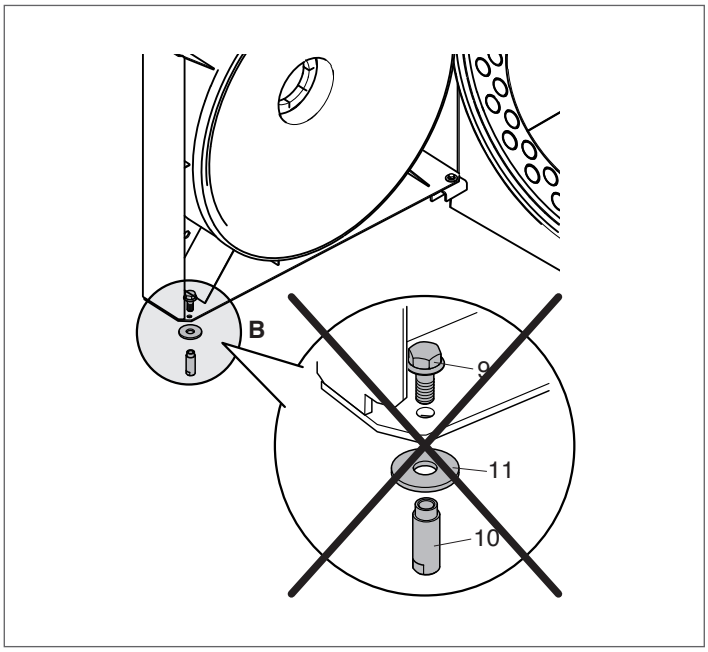

⚠ The first time you open the door, remove the spare hinge assembly 'B' [bushing (10), bolt (9), and washer (11)] opposite the hinged side of the door.

2.19 Cleaning the boiler

Clean the boiler and remove any carbon deposits from the surfaces of the heat exchanger **at least once a year**. This not only extends the boiler's working life, but also keeps it efficient in terms of heat output and consumption.

Proceed as follows to clean the boiler:

- open the front door (1) and pull out the turbulators (2);

⚠ If you need to replace any turbulators, make sure that the replacements have the characteristics listed in the table below.

- Use a flue brush (3) or other suitable tool to clean inside the combustion chamber and the flue gas pipes;
- open the inspection window (4) and clean out any deposits from inside the flue gas box.

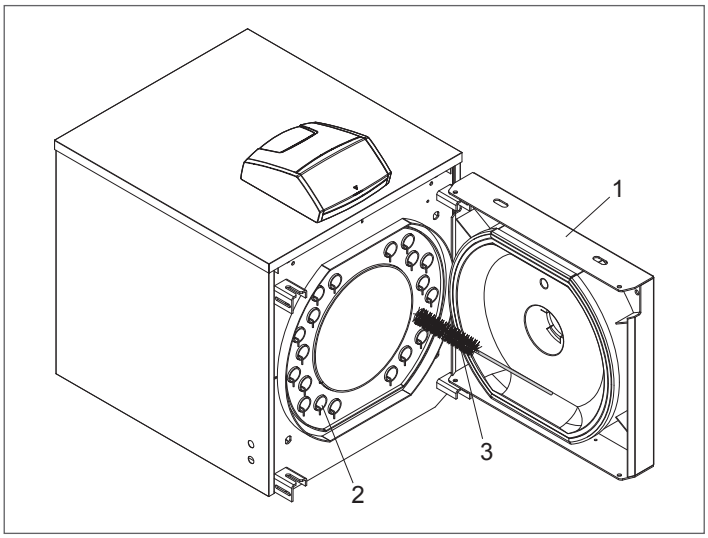

If more thorough cleaning is required, remove the flue gas box cover (5). Fit a new glass fibre seal when fitting the cover again. Check at regular intervals that the condensate drain (6) is not blocked.

On completion of cleaning, follow the above steps in the reverse order to refit all removed parts.

RTQ 50÷105

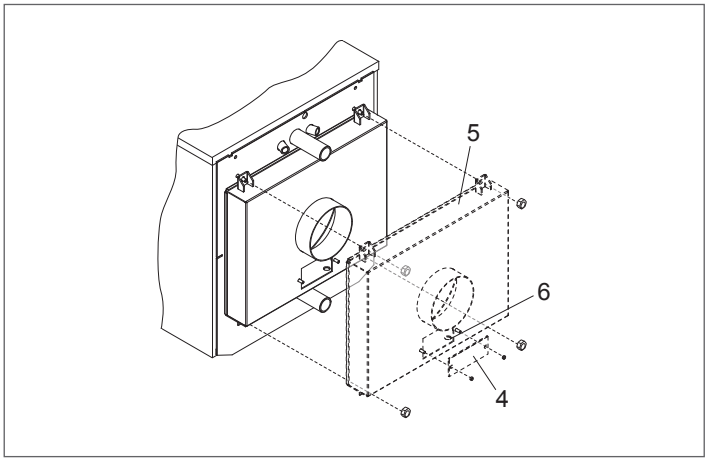

DIMENSIONS (mm)	RTQ			
	50	64	82	105
Length	625	625	625	802
N° waves	10	10	10	13
N° turbulators	14	16	22	22
Depth clip	74	89	89	89

RTQ 154÷235

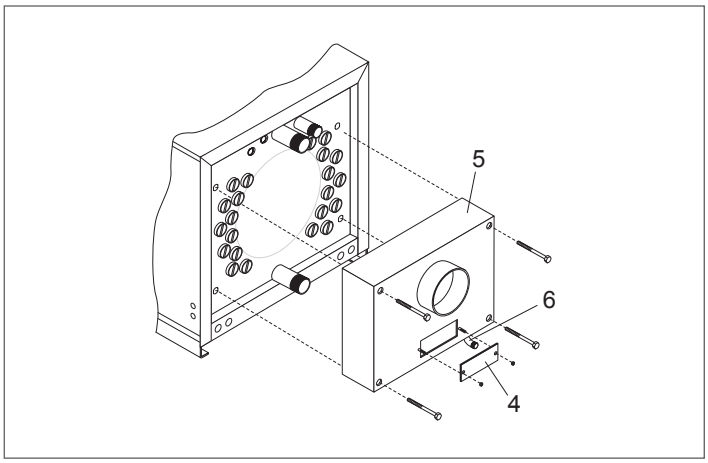

MODEL	RTQ		
	154	203	235
N° turbulators	22	30	30

RTQ 297÷837

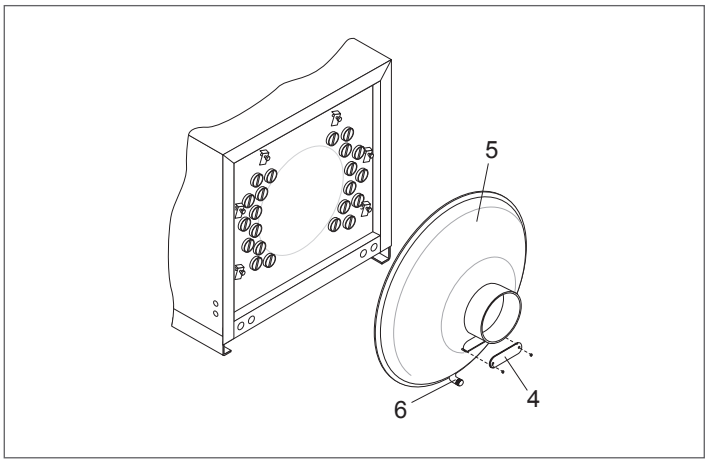

MODEL	RTQ								
	297	323	357	418	467	537	597	715	837
N° turbulators	34	34	39	44	44	49	49	60	60

⚠ When using heavy oil fuels (e.g. naphtha, etc.) clean/service the boiler more frequently and periodically check:
- clean the boiler's heat exchange surfaces;
- check and clean the turbulators. Replace if worn or damaged.

2.20 Troubleshooting

FAULT	CAUSE	SOLUTION
The boiler becomes dirty very quickly	Burner badly adjusted	– Check the adjustment of the burner (perform flue gas analysis)
	Blockage in stack	– Clean the flue gas pipes and stack
	Burner air intake dirty	– Clean the burner air intake
The boiler does not reach its temperature setpoint	Boiler dirty	– Clean the flue gas pipes
	Boiler and burner mismatched	– Check specifications and settings
	Insufficient air/fuel flow to burner	– Check and adjust the burner
	Incorrect adjustment	– Check correct functioning – Check the temperature setting
The boiler keeps shutting down, and the control panel warning light comes on	Incorrect adjustment	– Check correct functioning – Check the temperature setting – Check the electrical wiring – Check the sensors
	No water supply	– Check the circuit pressure
	Air in the circuit	– Check the circuit pressure – Check the vent valve
The boiler has reached the set temperature but the radiators are still cold	Air in the circuit	– Bleed the circuit
	Pump malfunctioning	– Check/unseize the pump
	Problem with minimum temperature thermostat (if present)	– Check the temperature setting
	Problem with minimum temp. thermostat (if present)	– Check the efficiency of the expansion vessel
There is a smell of fumes	Fumes escaping into the air	– Clean the boiler body – Clean the flue gas pipes – Check that the boiler, flue gas pipes and stack are all properly sealed – Check the door seal
There is a smell of gas	Gas supply circuit	– Check the seals, possible blockages and fuel quality.
The safety valve keeps opening	Circuit pressure too high	– Check the circuit pressure – Check pressure reducer functioning – Check pressure reducer setting
	Problem with heating system expansion vessel	– Check the efficiency of the expansion vessel

3 USE

3.1 Putting into service

Have **RIELLO**'s Technical Assistance Service start up your **RIELLO RTQ** boiler for the first time. Once this has been done, the boiler can be left to function automatically.

Under certain circumstances, such as after long periods of disuse, the service engineer responsible for the boiler may need to re-start it without involving the Technical Assistance Service. To do so, perform the following checks and operations:

- check that the gas cock and heating water cock are open;
- while the system is still cold, check that working pressure in the water circuit is over 1 bar but below the maximum limit specified for the boiler;

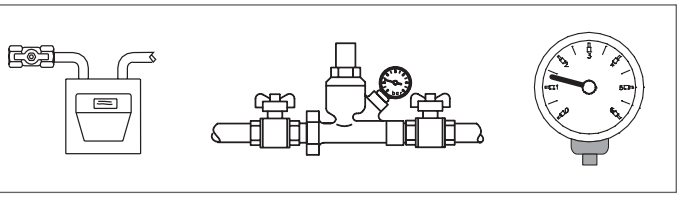

- turn the system's main power switch ON;
- if the system is equipped with a temperature controller or timer thermostat, make sure that it is switched on;

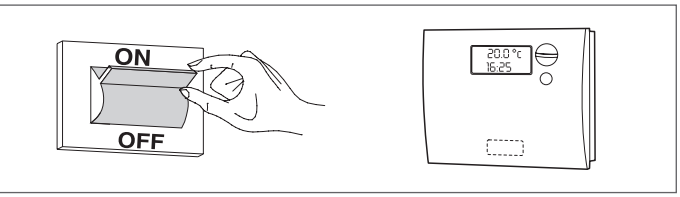

- turn the control panel power switch ON and make sure that the green power indicator lights;

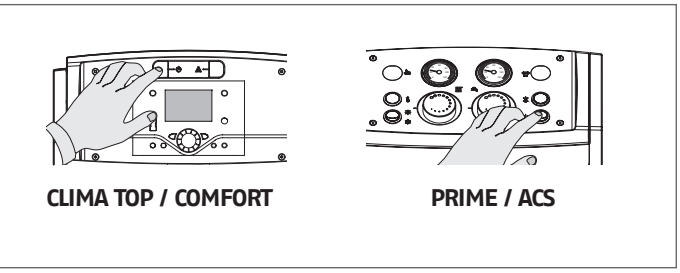

CLIMA TOP / COMFORT **PRIME / ACS**

- make the necessary settings as instructed in the instruction manual for your control panel;

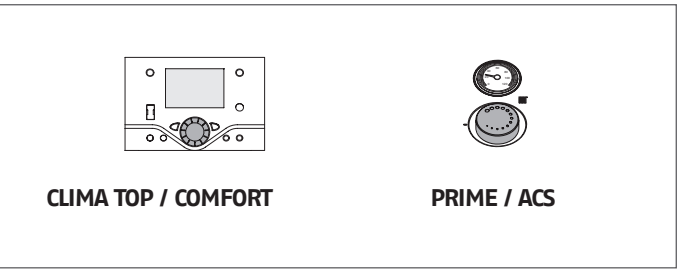

CLIMA TOP / COMFORT **PRIME / ACS**

- adjust the timer thermostat/s or temperature controller to the desired temperature (~20°C);

The burner should now ignite and remain in operation until the set temperature is reached.

Subsequent starts and stops will be made automatically according to the desired temperature without the need for further intervention.

If any ignition faults or malfunctions occur, the burner performs a "LOCKOUT SHUTDOWN". This is shown by the red button light on the burner and by the warning light on the control panel.

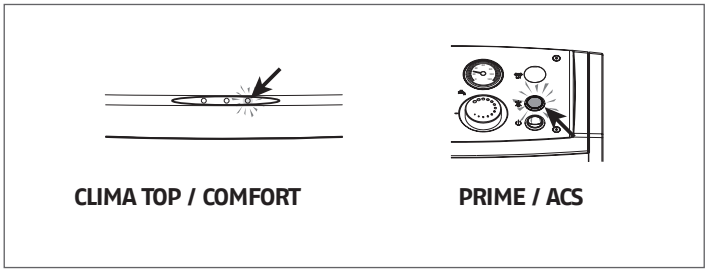

CLIMA TOP / COMFORT **PRIME / ACS**

⚠ If a "LOCKOUT SHUTDOWN" occurs, wait about 30 seconds before resetting the burner.

To reset the burner, press the red button light on the burner and wait until the flame ignites.

Repeat this operation 2-3 times at the most. If the problem persists after that, call **RIELLO**'s Technical Assistance Service.

If the problem persists, check that the safety thermostat has not tripped.

⚠ If the safety thermostat trips, the boiler shuts down and a warning is displayed on the control panel (if present).

Proceed as follows to reset the safety thermostat.

- Wait until boiler temperature falls below 80°C.
- Remove the safety thermostat cover.
- Press the manual reset button.
- Wait for the complete ignition cycle to be repeated and for the flame to ignite.

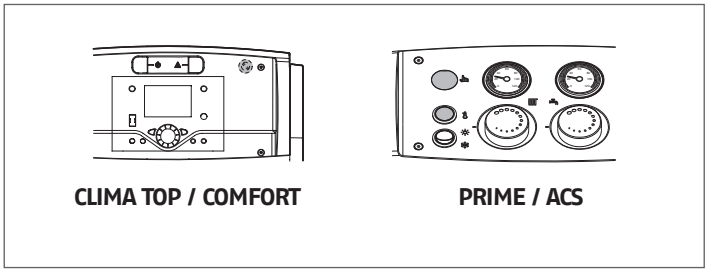

CLIMA TOP / COMFORT **PRIME / ACS**

3.2 Temporary shutdown

If you need to shut down the system for a short period, proceed as follows.

- turn the control panel power switch OFF and make sure that the green power indicator goes out;

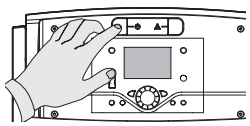

CLIMA TOP / COMFORT

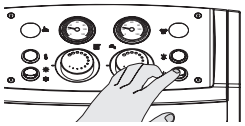

PRIME / ACS

- turn the mains power switch OFF;

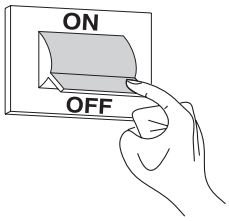

⚠ Do NOT perform this procedure if outdoor temperature falls below ZERO (risk of freezing).

Then proceed as follows:

- make the necessary settings as instructed in the instruction manual for your control panel;

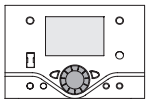

CLIMA TOP / COMFORT

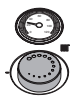

PRIME / ACS

- make sure that the temperature controller or timer / room thermostat is set to "frost protection" mode;

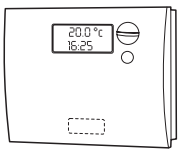

3.3 Preparing for extended periods of disuse

If the boiler is not going to be used for an extended period of time, perform the following operations:

- Turn the control panel power switch OFF and make sure that the green power indicator goes out

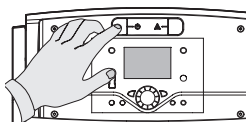

CLIMA TOP / COMFORT

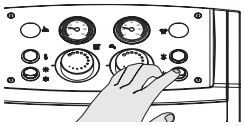

PRIME / ACS

- Turn the main system switch "off"

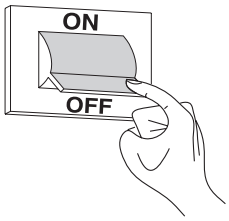

- Close the fuel cock and heating circuit water cock

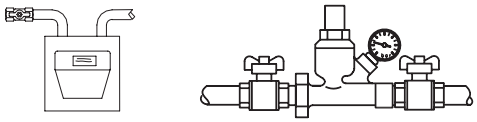

- Drain the central heating circuit if there is any risk of freezing.

⚠ Contact your local **RIELLO** Technical Assistance Service if you encounter any problems in completing the above procedure.

3.4 Cleaning

Use a cloth damped in soapy water to clean the boiler's external casing.
To remove stubborn marks, use a cloth damped in a 50% mix of water and denatured alcohol or a suitable cleaning product.
Carefully dry after cleaning.

⛔ Do not use abrasive cleaning pads or powder detergents.

⛔ Never clean the boiler without first disconnecting it from the mains electricity supply by turning the mains power switch and the control panel switch OFF.

⚠ The combustion chamber and flue pipes must be cleaned periodically by **RIELLO** Technical Assistance Service or by a qualified heating engineer (see page 33).

3.5 Maintenance

Please remember that THE PERSON RESPONSIBLE FOR SYSTEM MANAGEMENT MUST ENSURE THAT PROFESSIONALLY QUALIFIED HEATING ENGINEERS UNDERTAKE PERIODIC MAINTENANCE AND COMBUSTION EFFICIENCY MEASUREMENTS.

RIELLO's Technical Assistance Service is qualified to satisfy these legal requirements and can also provide useful information on MAINTENANCE PROGRAMMES designed to guarantee:

- Greater safety
- Compliance with applicable legislation
- Freedom from the risk of fines in the event of spot checks.

Regular maintenance is essential for the safety, efficiency and durability of the boiler.
Servicing is a legal requirement and must be performed at least once a year by a professionally qualified heating engineer.

3.6 Useful information

Seller:.....
Mr.: .....
Address: .....
Tel.:.....

Installer:.....
Mr.: .....
Address: .....
Tel.:.....

Technical Assistance Service: .....
Mr.: .....
Address: .....
Tel.:.....

Date	Work done

Fuel oil supplier: .....
Mr.: .....
Address: .....
Tel.:.....

Date	Quantity supplied	Date	Quantity supplied	Date	Quantity supplied	Date	Quantity supplied

RIELLO

RIELLO S.p.A.
Via Ing. Pilade Riello, 7
37045 – Legnago (VR)
www.riello.com

The manufacturer strives to continuously improve all products. Appearance, dimensions, technical specifications, standard equipment and accessories are therefore liable to modification without notice.