cod. 20035753 rev. 25 04/2026

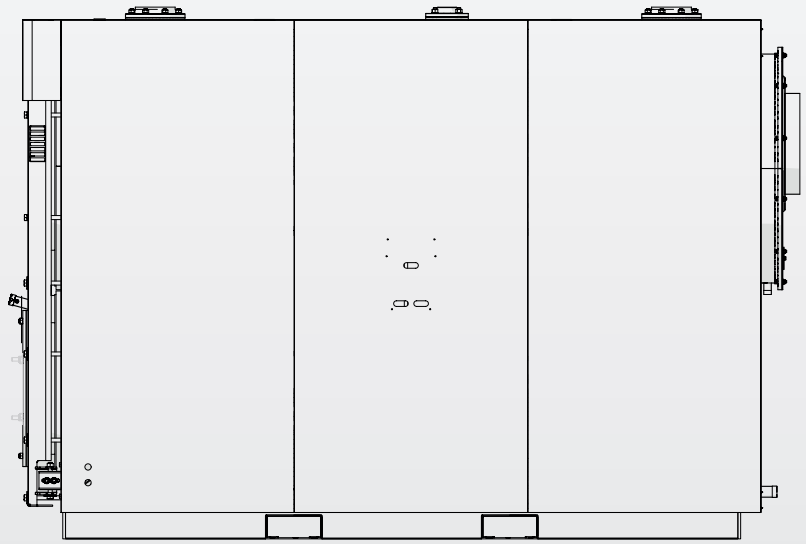

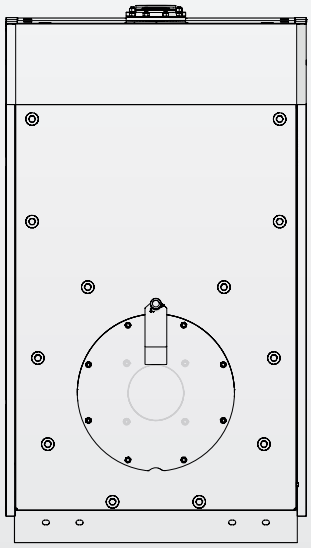

RTS 115÷2200 2S

EN INSTALLATION, TECHNICAL ASSISTANCE SERVICE AND SYSTEM MANAGEMENT MANUAL

RIELLO

RANGE

MODEL	CODE
RTS 115 2S	20150418
RTS 150 2S	20150304
RTS 200 2S	20150305
RTS 247 2S	20150410
RTS 319 2S	20150412
RTS 410 2S	20150416
RTS 526 2S	20150417
RTS 736 2S	20150419
RTS 850 2S	20150434
RTS 1012 2S	20150420
RTS 1200 2S	20150435
RTS 1355 2S	20150432
RTS 1500 2S	20150437
RTS 1850 2S	20150433
RTS 2200 2S	20204041

ACCESSORIES
For a complete list of accessories and details of their compatibility, refer to the Catalogue.

Dear Customer,
Thank you for choosing a **RIELLO** boiler. You have purchased a modern, high efficiency, quality product that is designed to give dependable and safe service and to provide comfort in the home for many years to come. Arrange for your boiler to be serviced regularly by an authorised Technical Assistance Service **RIELLO**. Their personnel are specially trained to keep your boiler efficient and cheap to run. They also stock any original spare parts that might be required.
This instruction manual contains important instructions and precautions that must be observed to ensure the efficient functioning of your **RTS 2S** boiler.

Please accept our renewed thanks for your purchase
Riello S.p.A.

CONFORMITY

RIELLO RTS 2S boilers conform to:
- Ecodesign Directive 2009/125/CE for energy-related products
- Low Voltage Directive 2014/35/EU
- Models up to 400 kW conform to the Energy-Related Products Directive 2009/125/EC and to the EU Delegated Regulation 813/2013.

When used in conjunction with a CE marked jet burner, they also satisfy the requirements:
- Regulation (EU) 2016/426
- applicable sections of the Electromagnetic Compatibility Directive 2014/30/EU

CE

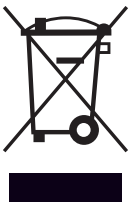

At the end of its life, the product should be not be disposed of as solid urban waste, but rather it should be handed over to a differentiated waste collection centre.

CONTENTS

1 GENERAL INFORMATION 4
1.1 General Safety Information 4
1.2 Precautions. 4
1.3 Description of the appliance 5
1.4 Control panels. 5
1.5 Identification 5
1.6 System layout 6
1.7 Burner combination 7
1.7.1 Important notes for fitting the burner. 9
1.7.2 Burner plate 10
1.8 Technical specifications. 11

2 SYSTEM MANAGER 13
2.1 Putting into service 13
2.2 Temporary shutdown 14
2.3 Preparing for extended periods of disuse 14
2.4 Cleaning 15
2.5 Maintenance. 15
2.6 Useful information 16

3 INSTALLER. 17
3.1 Unpacking the product 17
3.2 Overall dimensions and weights 18
3.3 Handling. 19
3.3.1 MOVING WITH A HOIST: RTS 115 ÷ 2200 2S 19
3.3.2 With a forklift: RTS 2200 2S. 19
3.4 Place of installation 20
3.4.1 Installation in older systems and systems requiring modernisation 20
3.5 Location of sensors 21
3.6 Water in central heating systems. 22
3.6.1 Use of antifreeze 23
3.6.2 Glycol 23
3.7 Water-side pressure drop 25
3.8 Water connections 26
3.8.1 Schematic diagram 27
3.9 Anti-condensate pump. 28
3.10 Discharge of combustion products 29
3.11 Door hinges 30
3.12 Changing the direction of door opening 30
3.12.1 System A - RTS 115 ÷ 410 2S. 30
3.12.2 System B - RTS 526 ÷ 1850 2S. 33
3.12.3 System C - RTS 2200 2S. 34
3.13 Earth connection 35
3.14 Fitting the casing panels. 36
3.14.1 Models RTS 115 ÷ 850 2S. 36
3.14.2 Models RTS 1200 ÷ 1850 2S 37
3.14.3 Model RTS 2200 2S 38
3.14.4 Applying nameplate label. 39

4 TECHNICAL ASSISTANCE SERVICE. 40
4.1 Preparing for initial startup. 40
4.2 Initial startup 40
4.3 Checks during and after initial start-up 41
4.4 Maintenance. 43
4.5 Door opening 43
4.5.1 System A - RTS 115 ÷ 410 2S. 43
4.5.2 System B - RTS 526 ÷ 2200 2S. 43
4.6 Adjusting the door 44
4.6.1 System A - RTS 115 ÷ 410 2S. 44
4.6.2 System B - RTS 526 ÷ 1850 2S. 44
4.6.3 System C - RTS 2200 2S. 44
4.7 Cleaning the boiler 45
4.8 External cleaning 46
4.9 Troubleshooting 47

The following symbols are used in this manual:

⚠ **CAUTION! =** Identifies actions that require caution and adequate preparation.

⊖ **STOP! =** Identifies actions that you MUST NOT do.

This manual, Code 20035753 - Rev. 25 (04/2026) comprises 48 pages.

1 GENERAL INFORMATION

1.1 General Safety Information

⚠ The boiler is delivered in separate crates. Check that it is complete, undamaged and as ordered as soon as you receive it. Report any discrepancies or damage to the **RIELLO** dealer who sold it.

⚠ This product must be installed by a legally qualified heating engineer. On completion of the installation, the installer must issue the owner with a declaration of conformity confirming that the installation has been completed to the highest standards in compliance with the instructions provided by **RIELLO** in this instruction manual, and that it conforms to all applicable laws and standards.

⚠ This product must only be used for the purpose for which it is designed and made, as specified by **RIELLO**. **RIELLO** declines all responsibility, contractual or other, for damage to property or injury to persons or animals caused by improper installation, adjustment, maintenance or use.

⚠ If you notice any water leaking from the boiler, disconnect it immediately from the mains electricity supply, shut off the water supply, and notify your local **RIELLO**'s Technical Assistance Service or a qualified heating engineer immediately.

⚠ Periodically check that operating pressure in the water circuit is over 1 bar but below the maximum limit specified for the boiler. If this is not the case, contact Technical Assistance Service **RIELLO** or a professionally qualified heating engineer.

⚠ If the boiler is not going to be used for an extended period of time, perform the following operations:
- Switch the boiler OFF at the control panel
- Turn the main system switch "off"
- Close the fuel cock and heating circuit water cock
- Drain the central heating circuit if there is any risk of freezing.

⚠ The boiler must be serviced at least once a year.

⚠ This instruction manual is an integral part of the boiler. It must be kept safe and must ALWAYS accompany the boiler, even if it is sold to another owner or transferred to another user or to another installation. If you damage or lose this manual, order a replacement immediately from your local **RIELLO**'s Technical Assistance Service.

1.2 Precautions

The operation of any appliance that uses fuel, electrical power and water demands that a number of fundamental safety precautions be respected:

⊖ It is forbidden to use electrical devices or equipment, such as switches, appliances, etc. if there is a smell of gas or unburnt products. If so:
- Ventilate the room, opening doors and windows
- Close the fuel shut-off cock
- Report the fault immediately to the **RIELLO**'s Technical Assistance Service or a professionally qualified heating engineer.

⊖ Do not touch the boiler while barefoot or wet.

⊖ Never clean or service the boiler without first disconnecting it from the mains electricity supply by turning the main power switch and the control panel switch OFF.

⊖ Do not tamper with or adjust the safety or control devices without prior authorisation and instructions from the manufacturer.

⊖ Do not plug or block the condensate drain outlet.

⊖ Never pull, disconnect, or twist the electrical cables coming from the appliance even if it is disconnected from the mains electricity supply.

⊖ Do not obstruct or restrict the vents in the room where the boiler is installed. Adequate ventilation is essential for correct combustion.

⊖ Do not expose the boiler to the elements. It is designed to work indoors.

⊖ Do not switch the boiler off if outdoor temperature drops below ZERO (risk of freezing).

⊖ Do not store containers of flammable substances in the room where the boiler is installed.

⊖ Do not allow children or persons with reduced physical, sensorial or mental abilities or with insufficient experience and knowledge to operate this system without proper supervision from the person responsible for its safe use.

⊖ Do not dispose of packaging material into the environment, or leave it within the reach of children, since it can become a potential hazard. Dispose of packaging material in compliance with applicable legislation.

1.3 Description of the appliance

MODELS UP TO 400KW, IN COMBINATION WITH AN OIL BURNER, COMPLY WITH THE ECODESIGN DIRECTIVE FOR ENERGY-RELATED PRODUCTS 2009/125/CE AND THE DELEGATED REGULATION (EU) NO.813/2013

RIELLO RTS 2S steel boilers are high efficiency triple flue pass boilers for central heating systems. When combined with a storage cylinder, they can also be used to produce domestic hot water. Because they operate at low pressure, they provide a gradual heating action without thermal shock.

The most important technical features of these boilers are:
- The combustion chamber and heat exchange system are specially designed and shaped to achieve the best possible volume ratio;
- Only top quality materials are used to ensure a long working life.

Stainless steel turbulators inside the flue gas pipes establish an ideal pressure inside the combustion chamber and an ideal flue gas temperature. Evenly distributed thermal load optimises the efficiency of the boiler-burner system.
The boiler body is thoroughly insulated with a layer of high density glass wool.
The boiler's front door and the flue gas box can be opened completely to facilitate the inspection, maintenance and cleaning of internal parts and to speed up servicing in general.
The front door can open in either direction, even without removing the burner.

1.4 Control panels

The **RIELLO** control panels that can be used with **RIELLO RTS 2S** steel boilers are listed below. These control panels cater for all the needs of the heating system and of all the devices installed in it.

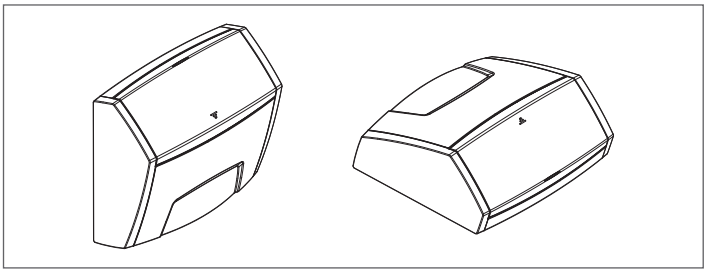

RIELLOtech CLIMA COMFORT for central heating (1 direct zone and 1 mixed zone) and domestic hot water production with a single stage burner. Also for controlling solar heating system and cascaded boiler systems.

RIELLOtech CLIMA MIX for controlling 1 additional mixed zone.

RIELLOtech PRIME for central heating only (1 direct zone) with a single or two stage burner.

RIELLOtech PRIME ACS for central heating (1 direct zone) and domestic hot water production with a single or two stage burner.

When the RIELLOtech CLIMA COMFORT control panel is installed, there must be a sheath for fitting the relative sensor on the boiler's return line (cold water). For the accessories codes, refer to the Catalogue.

1.5 Identification

The products are identified by:

Serial number plate
This is located on the boiler body and specifies the serial number, model, and furnace power.

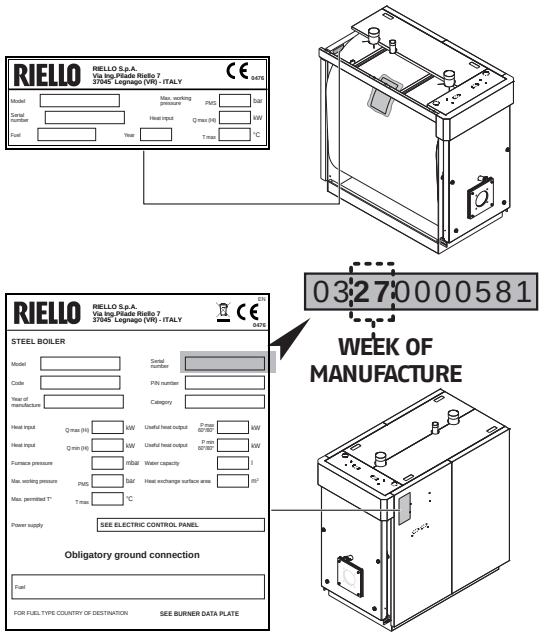

Data plate
This lists the technical specifications and performance of the product. It comes inside the documentation envelope. On completion of the installation, the installer MUST apply it in a clearly visible position at the top of one of the side panels. If you damage or lose this label, order a replacement immediately from **RIELLO**'s Technical Assistance Service.

There may be one or more data plates inside the document envelope. Identify the correct data plate to be applied according to the fuel supply.

If these plates or any other means of clearly identifying the product are defaced, removed or lost, proper installation and servicing may be rendered difficult.

1.6 System layout

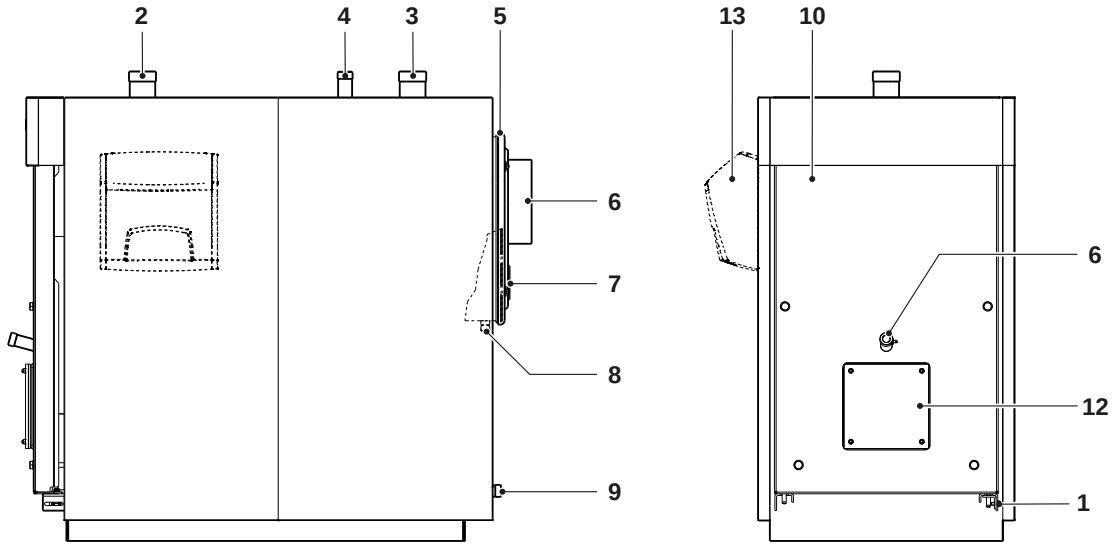

1 Door hinge
2 Central heating return
3 Central heating flow
4 Safety device fitting
5 Flue gas box
6 Flue gas exhaust
7 Door for cleaning flue gas chamber
8 Condensate outlet
9 Boiler drain
10 Front door
11 Flame inspection window
12 Burner plate
13 Electrical panel

1.7 Burner combination

BURNER	CALDAIA RTS 2S										Burner plate (**)
Model	410	526	736	850	1012	1200	1355	1500	1850	2200	
GAS - Yellow flame (Standard) - SINGLE-STAGE											
RS 44/1 MZ t.c.	•										4031395
GAS - Yellow flame (Standard) - TWO STAGE											
RS 44 MZ t.c.	•										4031395
RS 50 t.c.		•									4031395
RS 100 t.c.			•	•	•						4031188 - 20043900
RS 130 t.c.					•(*)	•					20043900
RS 190 t.c.							•	•	•		20178775
GAS - Yellow flame (Standard) - MODULATING - MECHANICAL CAM											
RS 44/M MZ t.c.	•										4031395
RS 50/M MZ t.c.		•									4031395
RS 100/M t.c.			•	•							4031188
RS 130/M t.c.					•	•					20043900
RS 190/M t.c.							•	•	•		20178775
GAS - Blue flame (LOW Nox) - MODULATING - MECHANICAL CAM											
RS 45/M BLU T.c.	•										4031395
RS 68/M BLU T.c.		•									4031196
RS 120/M BLU T.c.			•	•	•						4031196 - 4031196 - 20043900
RS 160/M BLU T.c.						•	•	•			20065920 - 20178775
RS 200/M BLU T.c.									•		20178775
RS 310/M BLU T.c.										•	20163867
GAS - Blue flame (LOW Nox) - MODULATING - ELECTRONIC CAM											
RS 45/E BLU T.c	•										4031395
RS 68/E BLU T.c		•									4031196
RS 120/E BLU T.c			•	•	•						4031196 - 20043900
RS 160/E BLU T.c						•	•	•			20065920 - 20178775
RS 200/E BLU T.c									•		20178775
RS 310/E BLU T.c										•	20163867

(*) Burner for altitude > 1800 m.
(**) Accessory

⚠ Please refer to the Manufacturer's catalogue for the burner code and the accessories required.

⚠ The combinations were obtained with the working point at 3% of O_2.

⚠ Please refer to the instruction manual supplied with your burner for burner installation, electrical connections and necessary adjustments.

⚠ Extended heads and burner plates are required for correct installation and optimal burner/boiler combinations.

⚠ To assemble/disassemble the burners equipped with recirculation tube, it might be necessary to remove the latter before carrying out such operations (strictly comply with the use and maintenance manual of the burner).

⚠ In the case of two-stage burners, the capacity of the 1st stage must be at least 70% of the total capacity. For liquid fuel burners equipped with 2 nozzles, the first stage nozzle must be selected appropriately.

⚠ Please be reminded that in Italy, the Prime Ministerial Decree of 2 October 1995 requires the use of fuel oil with a sulphur content of less than 0.3% by weight for thermal systems with a heat output of less than 3 MW. Please refer to the legislation in force in the country of installation.

BURNER	CALDAIA RTS 2S										Burner plate (**)
Model	410	526	736	850	1012	1200	1355	1500	1850	2200	
OIL – Yellow flame (STANDARD) – TWO STAGE											
RL 50 T.c.	●	●									4031395
RL 64 MZ T.c.	●(*)	●									4031188
RL 100 T.c.			●	●	●						4031188 – 20043900
RL 130 T.c.					●(*)	●	●				20043900 – 20178757
RL 190 T.c.								●	●		20178775
RL 250 MZ T.c.										●	20164364
OIL – Yellow flame (STANDARD) – MODULATING – MECHANICAL CAM											
RL 38/M T.c.	●										4031395
RL 50/M T.c.		●									
RL 100/M T.c.			●	●	●						4031188 – 20043900
RL 130/M T.c.					●(*)	●	●				20043900 – 20178757
RL 190/M T.c.								●	●		20178775
OIL – Blue flame (LOW Nox) – TWO STAGE											
RL 42 BLU	●										4031188
OIL – Blue flame (LOW Nox) – MODULATING											
RL 55/M BLU		●									4031188
RL 85/M BLU			●								4031196 – 20043900
MIXED OIL/GAS – Yellow flame (Standard) – TWO STAGE											
RLS 50	●										4031395
RLS 70		●	●								4031188
RLS 100				●	●						4031196 – 20043900
RLS 130					●						20043900
RLS 190/M MZ						●	●	●			20178775
RLS 250/M MZ									●		
MIXED OIL/GAS – Blue flame (LOW Nox) – TWO STAGE											
RLS 68/M MX T.c.	●	●									4031196
RLS 120/M MX T.c.			●	●							
RLS 160/M MX T.c.					●	●	●	●			20047680 – 20178775
RLS 310/M MX										●	20163867

(*) Burner for altitude > 1800 m.
(**) Accessory

⚠ Please refer to the Manufacturer's catalogue for the burner code and the accessories required.

⚠ The combinations were obtained with the working point at 3% of O_2.

⚠ Please refer to the instruction manual supplied with your burner for burner installation, electrical connections and necessary adjustments.

⚠ Extended heads and burner plates are required for correct installation and optimal burner/boiler combinations.

⚠ To assemble/disassemble the burners equipped with recirculation tube, it might be necessary to remove the latter before carrying out such operations (strictly comply with the use and maintenance manual of the burner).

⚠ In the case of two-stage burners, the capacity of the 1st stage must be at least 70% of the total capacity. For liquid fuel burners equipped with 2 nozzles, the first stage nozzle must be selected appropriately.

⚠ Please be reminded that in Italy, the Prime Ministerial Decree of 2 October 1995 requires the use of fuel oil with a sulphur content of less than 0.3% by weight for thermal systems with a heat output of less than 3 MW. Please refer to the legislation in force in the country of installation.

1.7.1 Important notes for fitting the burner

Before fixing the burner to the boiler, make sure that:
- The door opens the right way (see the relevant sections for details on how to reverse the door)
- The length (L) of the burner fixing bolts is less than (S), i.e. the total depth of the seal, plates and washer. **Longer bolts can cause the door to warp, compromising its ability to seal the boiler hermetically and permitting the release of combustion fumes.**

To ensure correct burner installation, also refer to the burner's own manual.

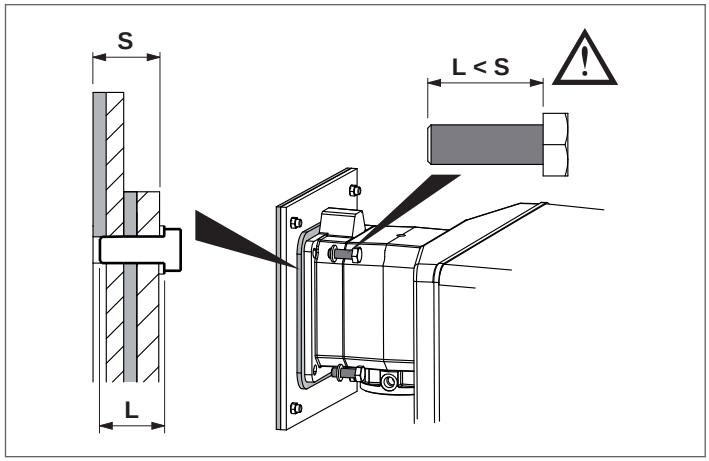

Please refer to the instruction manual supplied with your burner for indications on the drilling of the burner plate insulation, burner installation, electrical connections and necessary adjustments. For two-stage burners, the capacity of the 1st stage must be at least 70% of the total capacity.

If you are installing a new boiler but re-using an old burner, always perform the following checks:
- Make sure that the performance of the old burner is adequate for the requirements of the boiler
- Make sure that the length and diameter of the burner nozzle are as specified in the following table.

When you finish installing the burner in the boiler, fill the gap between the burner's blast tube and the refractory material in the door with the ceramic insulation (A) supplied with the boiler.

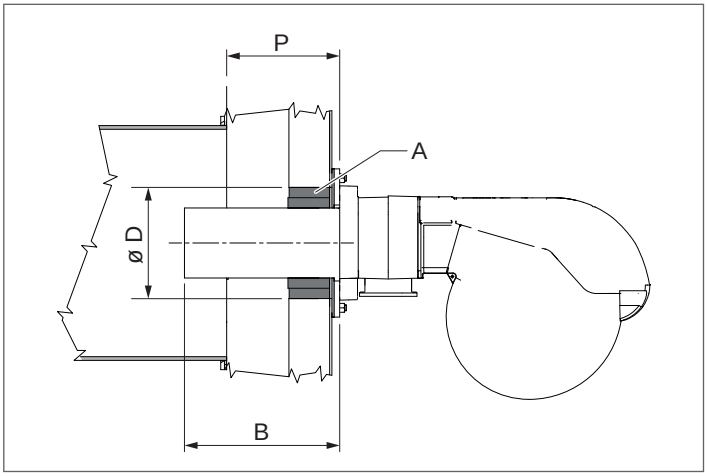

			BOILER RTS 2S					
			115	150	200	247	319	
B	Burner head	min	128	128	128	128	155	mm
D	Door hole diameter		140	140	162	162	180	ø mm
P	Door thickness		93	93	93	93	103	mm

			BOILER RTS 2S					
			410	526	736	850	1012	
B	Burner head	min	155	195	195	195	200	mm
D	Door hole diameter		210	220	220	220	230	ø mm
P	Door thickness		103	118	119	119	119	mm

			BOILER RTS 2S					
			1200	1355	1500	1850	2200	
B	Burner head	min	205	205	205	205	300	mm
D	Door hole diameter		230	370	370	370	520	ø mm
P	Door thickness		119	119	119	119	140	mm

The use of burners with a head length shorter than the depth (P) of the inspection door is prohibited.

1.7.2 Burner plate

RIELLO RTS 2S boilers are equipped as standard with **blind burner plates** for housing the recommended or different models of burners, including of other makes. Holes are to be drilled during the installation in relation to the chosen burner.

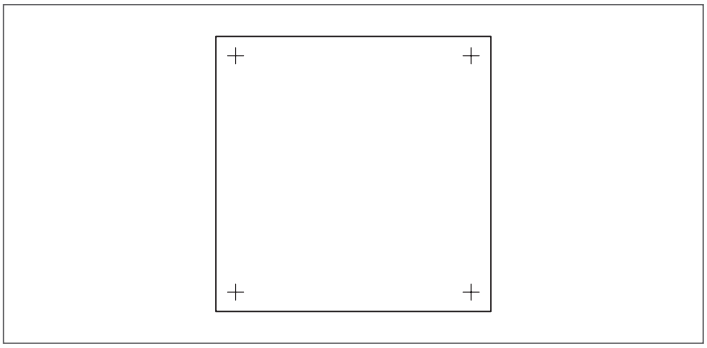

1.8 Technical specifications

DESCRIZIONE		CALDAIA RTS 2S							
		115 (**)	150 (**)	200 (**)	247 (**)	319 (**)	410	526	
Device type		Heating							
		B23							
Fuel		Gas/Oil							
Device category		See Burner							
Max. nominal thermal capacity (Q max)	NCV	125	166	217	270	349	448	575	kW
	GCV Gas	139	184	241	300	388	498	639	
	GCV Oil	133	176	230	286	370	475	610	
Min. nominal thermal capacity (Q min)	NCV	80	115	166	217	270	349	448	kW
	GCV Gas	89	128	184	241	300	388	498	
	GCV Oil	85	122	176	230	286	370	475	
Rated useful heat output (80/60°C) P4	max	115	153	201	252	326	419	538	kW
Nominal useful output (80/60°C) (Pn min)	min	75	107	155	203	252	326	418	kW
30% heat output with return at 47°C (P1)		30	41	56	71	90	116	149	kW
Efficiency at nominal thermal capacity and high temperature operation η4 (80/60°C)	NCV	91,8	92,2	92,7	93,5	93,5	93,5	93,5	%
	GCV Gas	82,6	83	83,4	84,2	84,2	84,2	84,2	
	GCV Oil	86,6	86,9	87,4	88,2	88,2	88,2	88,2	
Useful efficiency at Pn min (80/60°C)	NCV	93,4	93,4	93,4	93,4	93,4	93,4	93,4	%
	GCV Gas	84,1	84,1	84,1	84,1	84,1	84,1	84,1	
	GCV Oil	88,1	88,1	88,1	88,1	88,1	88,1	88,1	
Efficiency at 30% nominal thermal capacity η1 with 47°C return	NCV	98,1	97,2	97,2	97,2	97,2	97,2	97,2	%
	GCV Gas	88,3	87,5	87,5	87,5	87,5	87,5	87,5	
	GCV Oil	92,5	91,7	91,7	91,7	91,7	91,7	91,7	
Heat loss in standby mode		240	300	360	430	500	600	850	W
Flue gas temperature		<170 (*)							°C
Emissions at max. heat input Nox (0% O_2)		See burner type							mg/kWh
Flue gas mass flow rate (Max. Pn) G20 (*)		0,047	0,062	0,082	0,102	0,131	0,169	0,216	Kg/s
Flue gas mass flow rate (Max. Pn) DIESEL (*)		0,055	0,073	0,097	0,12	0,155	0,199	0,255	Kg/s
Furnace pressure		1,2	1,6	1,8	3	2,4	3,7	2,2	mbar
Furnace volume		75	121	176	176	240	296	453	dm^3
Tot. volume of flue gas side		112	176	253,5	261,5	357,5	443	682	dm^3
Total surface area for heat exchange		3,77	5,32	7,34	8,16	10,06	12,88	18,58	m^2
Volumetric thermal load (Pn Max)		1663	1345	1226	1501	1422	1481	1242	kW/m^3
Specific thermal load (Pn Max)		30,6	28,8	27,4	30,9	32,4	32,5	28,9	kW/m^2
Max. operating pressure		6							bar
Maximum permitted temperature		110							°C
Maximum operating temperature		95							°C
Minimum admissible water return temperature		55							°C
Pressure drops	ΔT 10°C	43	63	56	79	83	132	122	mbar
	ΔT 20°C	13	14	12	18	24	34	34	mbar
Water capacity		176	255	319	309	408	495	655	l

NCV Net calorific value of fuel
GCV Gross calorific value of fuel
(*) Flue gas temperature with boiler in operation 80/60°C and ambient temperature 20-25°C.
(**) Heating appliance intended only for replacement in accordance with the provisions of article 1, paragraph 2, point G of the EU regulation No. 813/2013.

⚠ Values obtained with gas burners **RIELLO** calibrated with CO_2 = 9,7%, λ= 1,2 and with diesel burners **RIELLO** calibrated with CO_2 = 12,5%.

⚠ The stack must guarantee the minimum draught specified by applicable technical standards, assuming zero pressure at the connection to the flue.

DESCRIZIONE		CALDAIA RTS 2S								
		736	850	1012	1200	1355	1500	1850	2200	
Device type		Heating								
		B23								
Fuel		Gas/Oil								
Device category		See Burner								
Max. nominal thermal capacity (Q max)	NCV	860	910	1100	1284	1450	1658	1980	2350	kW
	GCV Gas	956	1011	1222	1427	1611	1842	2200	2611	
	GCV Oil	912	965	1166	1362	1538	1758	2100	2492	
Min. nominal thermal capacity (Q min)	NCV	639	790	860	1100	1100	1450	1660	1980	kW
	GCV Gas	710	878	956	1222	1222	1611	1844	2200	
	GCV Oil	678	838	912	1166	1166	1538	1760	2100	
Rated useful heat output (80/60°C) P4	max	804	851	1029	1201	1356	1550	1851	2197	kW
Nominal useful output (80/60°C) (Pn min)	min	597	738	803	1027	1027	1354	1550	1849	kW
30% heat output with return at 47°C (P1)		219	248	286	348	372	453	531	631	kW
Efficiency at nominal thermal capacity and high temperature operation η4 (80/60°C)	NCV	93,5	93,5	93,5	93,5	93,5	93,5	93,5	93,5	%
	GCV Gas	84,2	84,2	84,2	84,2	84,2	84,2	84,2	84,2	
	GCV Oil	88,2	88,2	88,2	88,2	88,2	88,2	88,2	88,2	
Useful efficiency at Pn min (80/60°C)	NCV	93,4	93,4	93,4	93,4	93,4	93,4	93,4	93,4	%
	GCV Gas	84,1	84,1	84,1	84,1	84,1	84,1	84,1	84,1	
	GCV Oil	88,1	88,1	88,1	88,1	88,1	88,1	88,1	88,1	
Efficiency at 30% nominal thermal capacity η1 with 47°C return	NCV	97,2	97,2	97,2	97,2	97,2	97,2	97,2	97,2	%
	GCV Gas	87,5	87,5	87,5	87,5	87,5	87,5	87,5	87,5	
	GCV Oil	91,7	91,7	91,7	91,7	91,7	91,7	91,7	91,7	
Heat loss in standby mode		1000	1000	1200	1500	1700	1950	2050	2100	W
Flue gas temperature		<170 (*)								°C
Emissions at max. heat input Nox (0% O_2)		See burner type								mg/kWh
Flue gas mass flow rate (Max. Pn) G20 (*)		0,324	0,343	0,414	0,483	0,546	0,624	0,745	0,885	Kg/s
Flue gas mass flow rate (Max. Pn) DIESEL (*)		0,382	0,405	0,488	0,57	0,644	0,736	0,879	1,044	Kg/s
Furnace pressure		4,8	6,8	6,1	9,8	5,1	7	7,2	10,4	mbar
Furnace volume		613	613	812	812	1065	1065	1297	1593	dm^3
Tot. volume of flue gas side		899	899	1209	1209	1656	1656	2088	2410	dm^3
Total surface area for heat exchange		23,45	23,45	30,6	30,6	40,4	40,4	51,82	62,95	m^2
Volumetric thermal load (Pn Max)		1284	1483	1333	1581	1361	1511	1527	1478	kW/m^3
Specific thermal load (Pn Max)		31,5	36,3	33,6	39,2	33,6	37,1	35,7	35,0	kW/m^2
Max. operating pressure		6								bar
Maximum permitted temperature		110								°C
Maximum operating temperature		95								°C
Minimum admissible water return temperature		55								°C
Pressure drops	ΔT 10°C	97	107	71	93	128	167	147	195	mbar
	ΔT 20°C	28	31	23	29	33	43	42	50	mbar
Water capacity		899	899	1193	1193	1537	1537	2111	2405	l

NCV Net calorific value of fuel
GCV Gross calorific value of fuel
(*) Flue gas temperature with boiler in operation 80/60°C and ambient temperature 20-25°C.

⚠ Values obtained with gas burners **RIELLO** calibrated with CO_2 = 9,7%, λ= 1,2 and with diesel burners **RIELLO** calibrated with CO_2 = 12,5%.

⚠ The stack must guarantee the minimum draught specified by applicable technical standards, assuming zero pressure at the connection to the flue.

2 SYSTEM MANAGER

2.1 Putting into service

Have **RIELLO**'s Technical Assistance Service start up your **RIELLO RTS 2S** boiler for the first time. Once this has been done, the boiler can be left to function automatically.

Under certain circumstances, such as after long periods of disuse, the service engineer responsible for the boiler may need to re-start it without involving the Technical Assistance Service. To do so, perform the following checks and operations:

- check that the gas cock and heating water cock are open;
- check that the pressure of the hydraulic circuit when cold is always **greater than 1 bar** and less than the maximum limit permitted for the appliance;

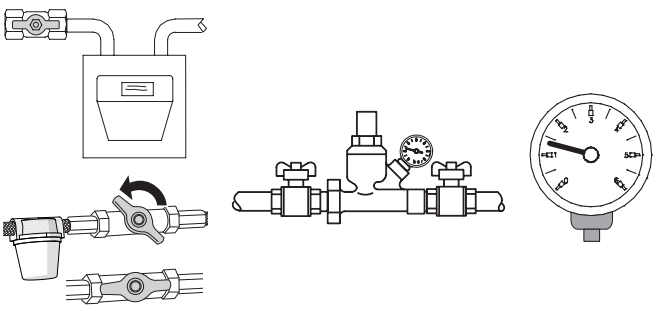

- turn the system's main power switch ON;
- if the system is equipped with a temperature controller or timer thermostat, make sure that it is switched on;



- Turn the control panel power switch ON and make sure that the green power indicator lights;

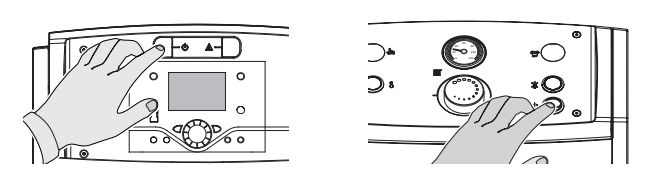

RIELLOtech CLIMA COMFORT
RIELLOtech CLIMA MIX

RIELLOtech PRIME
RIELLOtech PRIME ACS

- make the necessary settings as instructed in the instruction manual for your control panel;

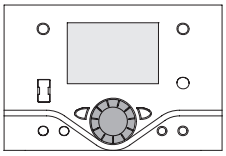

RIELLOtech CLIMA COMFORT
RIELLOtech CLIMA MIX

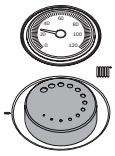

RIELLOtech PRIME
RIELLOtech PRIME ACS

- adjust the timer thermostat/s or temperature controller to the desired temperature (~20°C).

The burner should now ignite and remain in operation until the set temperature is reached.

Subsequent starts and stops will be made automatically according to the desired temperature without the need for further intervention.

If any ignition faults or malfunctions occur, the burner performs a "LOCKOUT SHUTDOWN". This is shown by the red button light on the burner and by the warning light on the control panel.

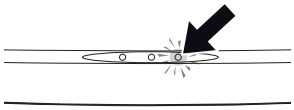

RIELLOtech CLIMA COMFORT
RIELLOtech CLIMA MIX

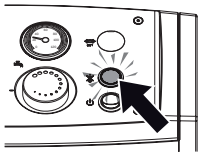

RIELLOtech PRIME
RIELLOtech PRIME ACS

⚠ If a "LOCKOUT SHUTDOWN" occurs, wait about 30 seconds before resetting the burner.

To reset the burner, press the red button light on the burner and wait until the flame ignites.

Repeat this operation 2-3 times at the most. If the problem persists after that, call **RIELLO**'s Technical Assistance Service.

If the problem persists, check that the safety thermostat has not tripped.

⚠ If the safety thermostat trips, the boiler shuts down and a warning is displayed on the control panel (if present).

Proceed as follows to reset the safety thermostat:

- Wait until boiler temperature falls below 80°C;
- Remove the safety thermostat cover;
- Press the manual reset button;
- Wait for the complete ignition cycle to be repeated and for the flame to ignite.

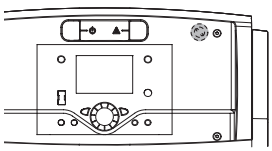

RIELLOtech CLIMA COMFORT
RIELLOtech CLIMA MIX

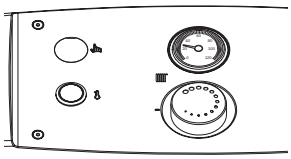

RIELLOtech PRIME
RIELLOtech PRIME ACS

2.2 Temporary shutdown

If you need to shut down the system for a short period, proceed as follows:

- turn the control panel power switch OFF and make sure that the green power indicator goes out;

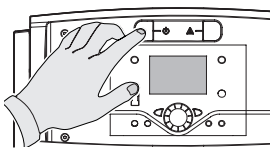

RIELLOtech CLIMA COMFORT
RIELLOtech CLIMA MIX

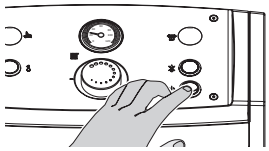

RIELLOtech PRIME
RIELLOtech PRIME ACS

- turn the mains power switch OFF;

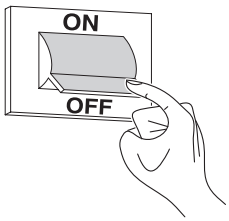

⚠ Do NOT perform this procedure if outdoor temperature falls below ZERO (risk of freezing).

Then proceed as follows:

- make the necessary settings as instructed in the instruction manual for your control panel;

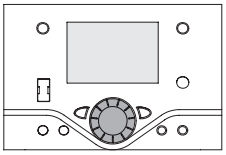

RIELLOtech CLIMA COMFORT
RIELLOtech CLIMA MIX

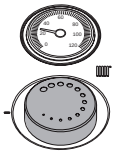

RIELLOtech PRIME
RIELLOtech PRIME ACS

- make sure that the temperature controller or timer / room thermostat is set to "frost protection" mode.

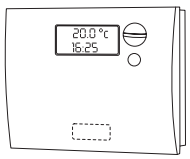

2.3 Preparing for extended periods of disuse

If the boiler is not going to be used for an extended period of time, perform the following operations:

- Turn the control panel power switch OFF and make sure that the green power indicator goes out

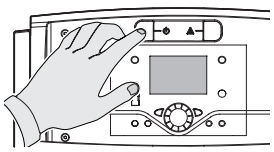

RIELLOtech CLIMA COMFORT
RIELLOtech CLIMA MIX

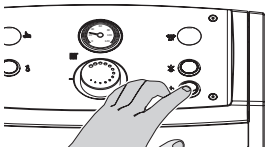

RIELLOtech PRIME
RIELLOtech PRIME ACS

- Turn the main system switch "off"

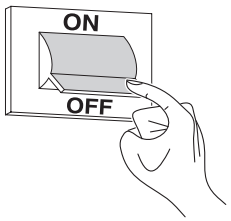

- Close the fuel cock and heating circuit water cock;

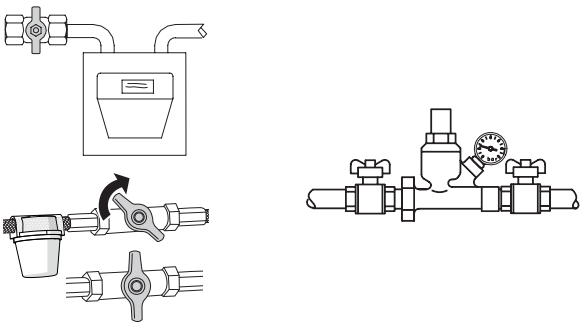

- Drain the central heating circuit if there is any risk of freezing.

⚠ Contact your local **RIELLO** Technical Assistance Service if you encounter any problems in completing the above procedure.

2.4 Cleaning

Use a cloth damped in soapy water to clean the boiler's external casing.
To remove stubborn marks, use a cloth damped in a 50% mix of water and denatured alcohol or a suitable cleaning product.
Carefully dry after cleaning.

⊖ Do not use abrasive cleaning pads or powder detergents.

⊖ Never clean the boiler without first disconnecting it from the mains electricity supply by turning the mains power switch and the control panel switch OFF.

⚠ The combustion chamber and flue pipes must be cleaned periodically by Technical Assistance Service or by a qualified heating engineer (see page 45).

2.5 Maintenance

Please remember that THE PERSON RESPONSIBLE FOR SYSTEM MANAGEMENT MUST ENSURE THAT PROFESSIONALLY QUALIFIED HEATING ENGINEERS UNDERTAKE PERIODIC MAINTENANCE AND COMBUSTION EFFICIENCY MEASUREMENTS.

RIELLO's Technical Assistance Service is qualified to satisfy these legal requirements and can also provide useful information on MAINTENANCE PROGRAMMES designed to guarantee:

- Greater safety
- Compliance with applicable legislation
- Freedom from the risk of fines in the event of spot checks.

Regular maintenance is essential for the safety, efficiency and durability of the boiler.
Servicing is a legal requirement and must be performed at least once a year by a professionally qualified heating engineer.

2.6 Useful information

Seller:.....
Mr.: .....
Address: .....
Tel.:.....

Installer:.....
Mr.: .....
Address: .....
Tel.:.....

Technical Assistance Service: .....
Mr.: .....
Address: .....
Tel.:.....

Date	Work done

Fuel oil supplier: .....
Mr.: .....
Address: .....
Tel.:.....

Date	Quantity supplied	Date	Quantity supplied	Date	Quantity supplied	Date	Quantity supplied

3 INSTALLER

3.1 Unpacking the product

RTS 2S RIELLO boilers are delivered in **3 separate packages**:

1 **THE BOILER BODY** inside the protective cover (A), includes:
- Ceramic insulation (B);
- Document pouch (C) containing:
  - Instruction manual;
  - Technical data plate adhesive (to be applied to the panelling when installing the boiler);
  - Warranty Certificate and Hydraulic Test Certificate;
  - Labels with Bar Code.

DO NOT START THE BOILER UNTIL THE OPERATIONS INDICATED ON THE RED LABEL ON THE FLAME VIEWER HAVE BEEN CARRIED OUT.

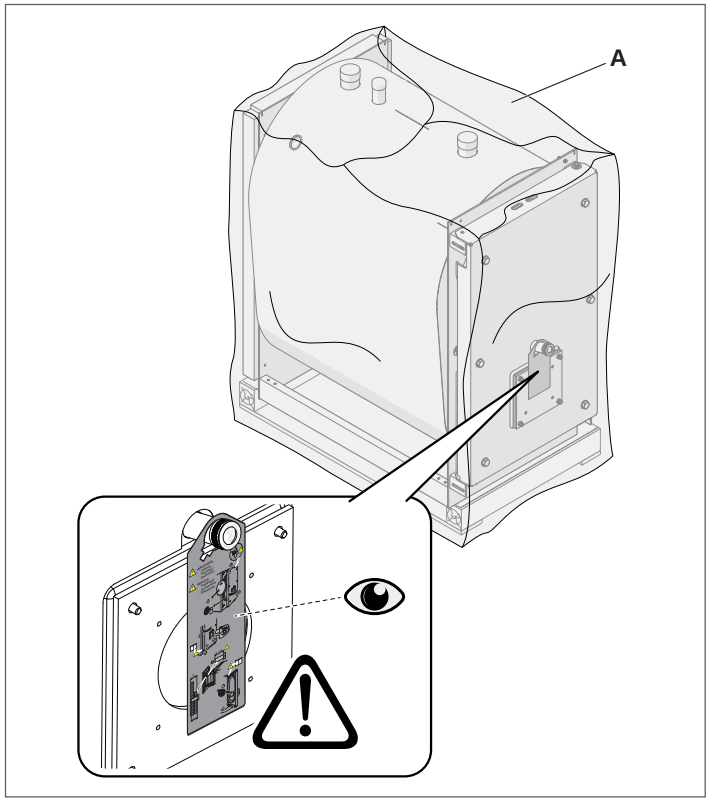

THE INSTRUCTION MANUALS ARE AN INTEGRAL PART OF THE BOILER, THEREFORE WE RECOMMEND TO READ AND KEEP THEM WITH CARE.

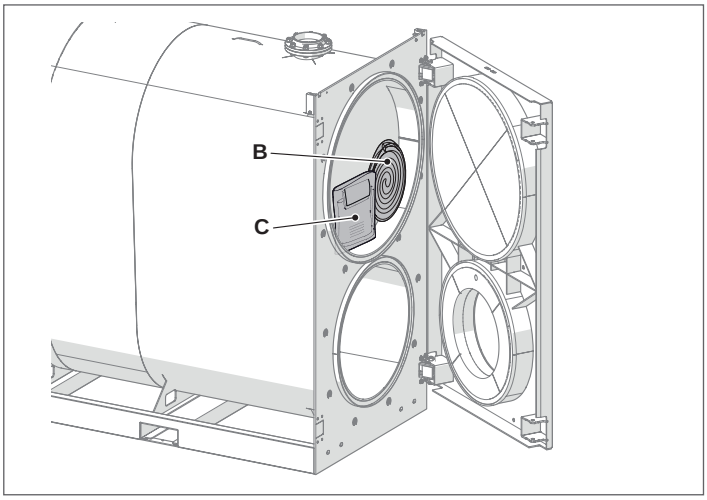

2 **THE PANELLING**, complete with the assembly accessories, inside a protective cardboard box and a wooden crate.

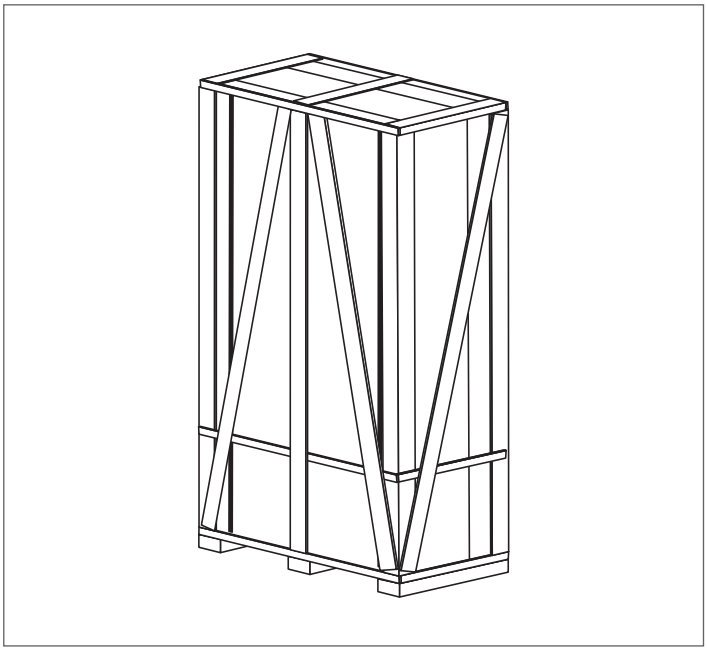

3 **FRONT PANEL** to be applied on the front door.

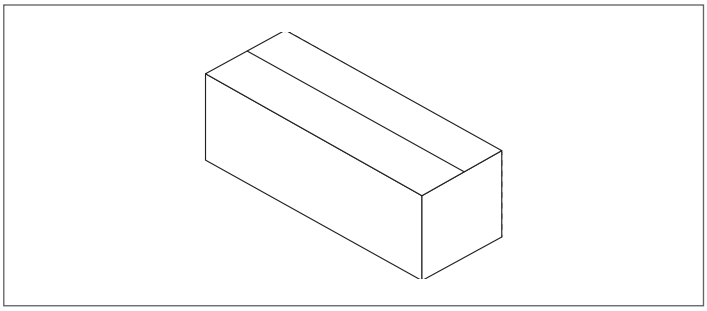

The operation of the **RTS 2S RIELLO** boilers is conditional on the use of a control panel as indicated in section "Control panels" on page 5.

3.2 Overall dimensions and weights

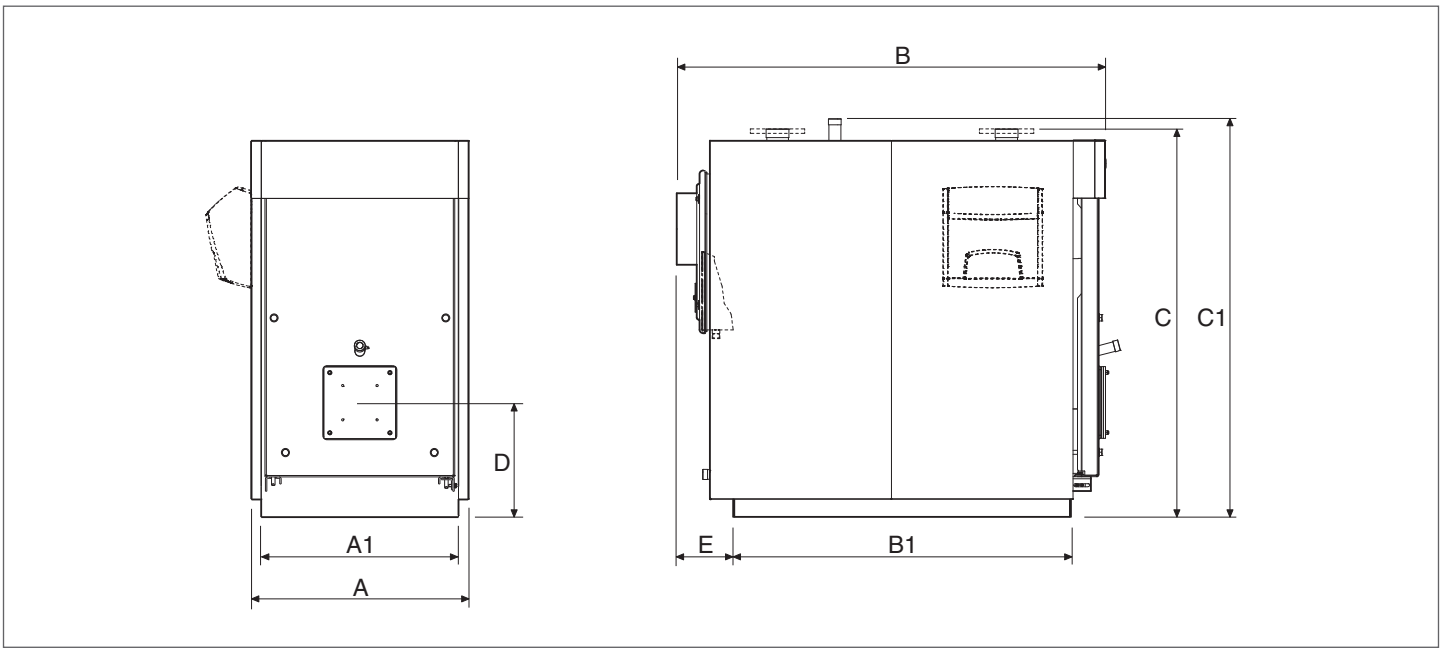

DESCRIZIONE		CALDAIA RTS 2S															
		115	150	200	247	319	410	526	736	850	1012	1200	1355	1500	1850	2200	
A	Total Width	660	710	760	760	820	820	890	1000	1000	1047	1047	1147	1147	1237	1340	mm
A1	Width of Baseplate	580	640	690	690	750	750	790	900	900	980	980	1070	1070	1160	1260	mm
B	Total Length	1155	1330	1500	1500	1660	1960	2085	2375	2375	2657	2657	2954	2954	3173	3460	mm
B1	Floor-standing length	860	1010	1180	1180	1296	1596	1692	1965	1965	2236	2236	2533	2533	2754	3020	mm
C	Height of Hydraulic Fittings	1205	1285	1390	1390	1524	1490	1685	1830	1830	1920	1920	2080	2080	2222	2322	mm
C1	Total Height	1225	1305	1390	1390	1525	1525	1730	1875	1875	1960	1960	2120	2120	2222	2322	mm
D	Burner Axis	380	380	400	400	468	468	510	560	560	570	570	625	625	650	670	mm
E	Baseplate Flue-Gas Stack	180	190	200	200	225	225	250	270	270	270	270	270	270	270	265	mm
Boiler body weight		305	392	488	503	675	809	1107	1430	1430	1947	1947	2527	2527	3330	4310	kg
Weight of casing		30	28	32	32	40	42	53	70	70	93	93	100	100	110	150	kg
Total Boiler Weight (including panelling)		335	420	520	535	715	851	1160	1500	1500	2040	2040	2627	2627	3440	4460	kg

3.3 Handling

⚠ Before handling the appliance and removing the packaging, wear PPE and use tools suitable for the appliance's size and weight.

The product can be moved in two ways:
- Using a forklift truck with adequate lifting capacity.
- Using a hoist with adequate lifting capacity;

3.3.1 MOVING WITH A HOIST: RTS 115 ÷ 2200 2S

Two lifting points (A) are provided at the top of the boiler for handling with a hoist. Proceed as follows to move the boiler and remove the packaging:
- Remove the protective film;
- Move the boiler to the place of installation, use a crane for lifting and using only the lifting accessories provided with it.
- If chains are used to lift the boiler, make sure that at least two of the chains are load-bearing.
- Lift with the utmost care.
- Maintain an angle less than 45 degrees from the vertical when lifting the boiler with chains or ropes.
- The crane must be operated by trained personnel.

⚠ The packaging material must be disposed of carefully and must not be abandoned, as it is a source of potential danger.

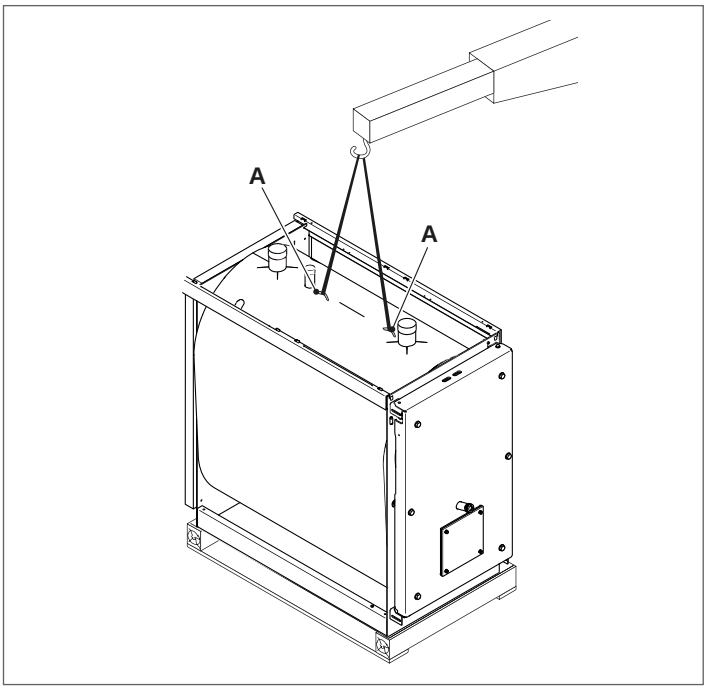

3.3.2 With a forklift: RTS 2200 2S

Two pockets (B) for handling with a forklift are positioned in the lower part and accessible from both sides of the boiler.

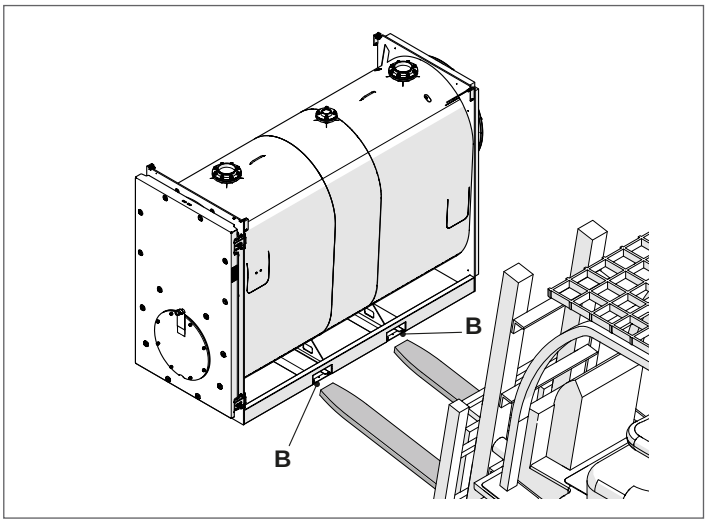

3.4 Place of installation

RIELLO RTS 2S steel boilers must be installed in a dedicated boiler room, with adequately sized vents, in compliance with applicable laws and standards.

If at all possible, the boiler should be installed on a raised base to prevent the burner fan sucking up dust.

The gas supply pipe must be installed in such away that the boiler's panelling can be removed and the front door opened without having to remove the burner.

⚠ When installing the boiler, allow sufficient space around it to access all safety and control devices and to permit easy maintenance.

⚠ If the specific weight of the gas supply to the burner is greater than the specific weight of air, install all electrical parts at least 500 mm above floor level.

⛔ Do not install the boiler outdoors. It is not designed to work outdoors and is not fitted with the necessary automatic anti-frost systems to do so.

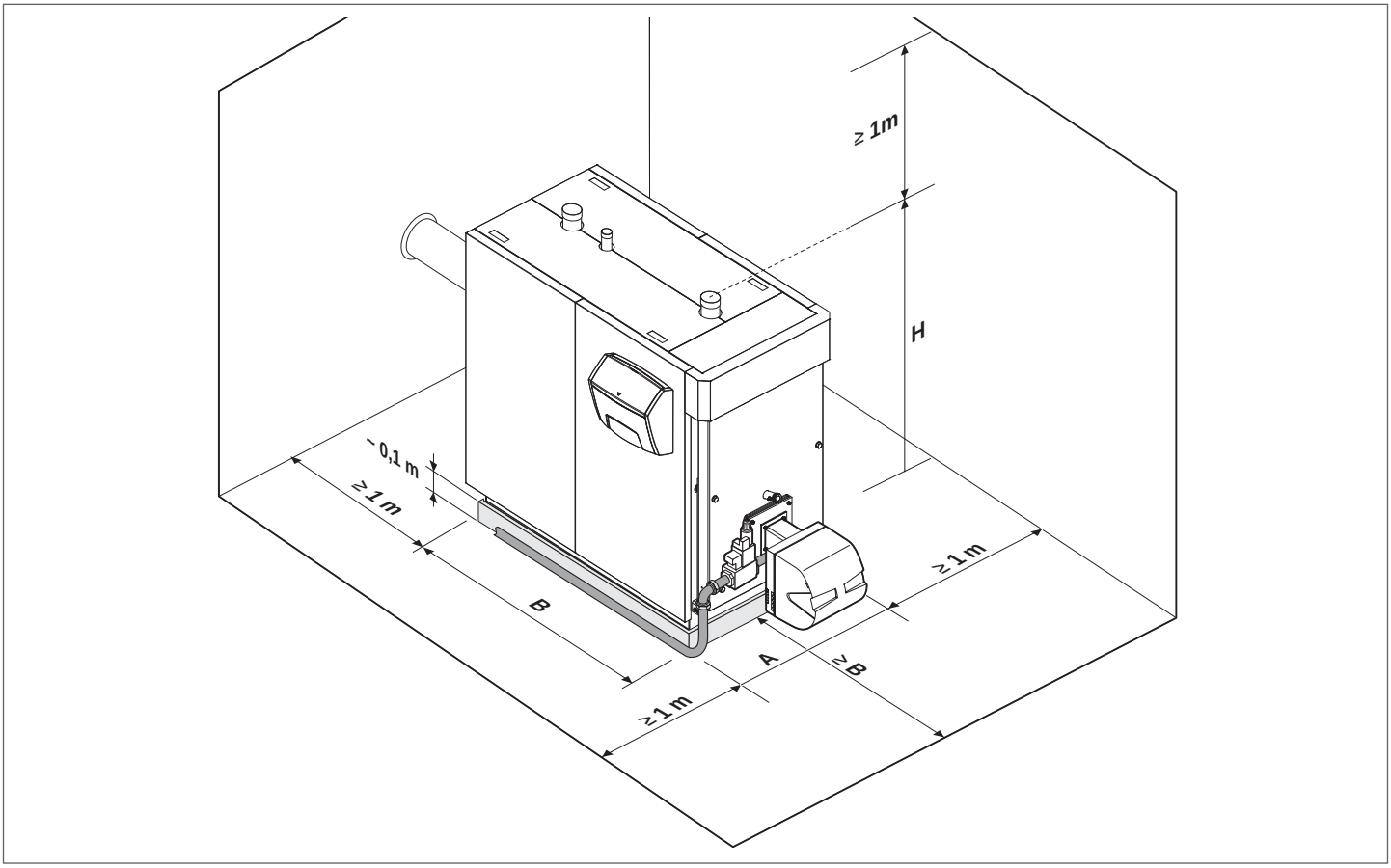

DESCRIZIONE		CALDAIA RTS 2S															
		115	150	200	247	319	410	526	736	850	1012	1200	1355	1500	1850	2200	
A	Width	660	710	760	760	820	820	890	1000	1000	1047	1047	1070	1070	1160	1340	mm
B	Length	1155	1330	1500	1500	1660	1960	2085	2375	2375	2657	2657	2533	2533	2754	3460	mm
H	Total height of boiler	1150	1230	1320	1320	1470	1490	1685	1820	1820	1900	1900	2080	2080	2222	2320	mm

3.4.1 Installation in older systems and systems requiring modernisation

When installing these boilers in old systems or systems requiring modernisation, always perform the following checks:
- make sure that the stack is able to withstand the temperature of the combustion gases and that it has been designed and made in compliance with applicable standards. The stack must also be as straight as possible, sealed, insulated and not blocked or choked;
- make sure that the electrical system has been installed by a qualified electrician in compliance with applicable standards;
- make sure that the oil feed line and any oil storage tank are made and installed in compliance with applicable standards;
- make sure that the expansion vessels are big enough to contain the volume generated by thermal expansion;
- make sure that flow rate, head and direction of flow of the pumps are suitable and correct;
- make sure that the circuit has been flushed out to remove all sludge and lime scale, and has been vented and seal tested;
- make sure that a suitable water treatment system is installed if the quality of the supply/recirculation water so demands.

3.5 Location of sensors

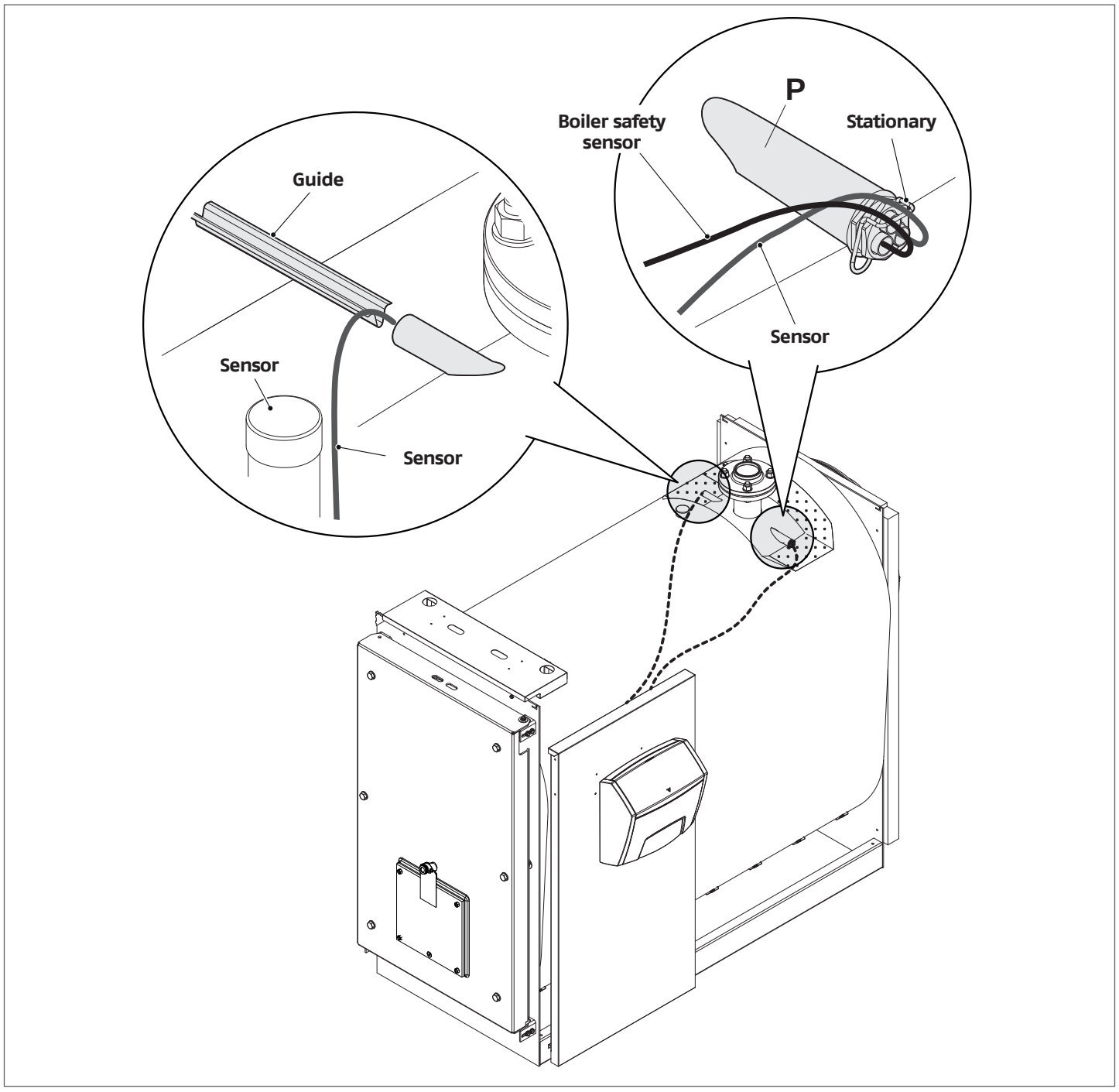

3.6 Water in central heating systems

INTRODUCTION

Water used in central heating systems MUST be suitably treated to ensure the correct functioning of those systems and to guarantee an extended working life for boilers and all other system components. This applies not only to existing systems but to newly installed systems too.
Sludge, lime-scale and pollutants present in the water can cause permanent damage to the heating unit, also within a short time and regardless of the quality standards of the materials used.
Contact the Technical Assistance Service for any further information on type and use of additives.

⚠ Always conform to the standards and legislation applicable in the country of installation.

WATER IN CENTRAL HEATING SYSTEMS.
INSTRUCTIONS FOR THE DESIGN, INSTALLATION AND MANAGEMENT OF CENTRAL HEATING SYSTEMS.

1. Chemical and physical characteristics of water
The chemical and physical characteristics of the water must comply with the standards and table below:

European Standards:
- **EN 14868** Protection of metallic materials against corrosion in closed water circulation systems
- **EN 12953-10** Quality requirements for the supply water and the water in the boiler >100°C

National Standards / Leg Dec:
- **UNI 8065:2019** Water treatment for domestic use

STEEL BOILERS			
	U/M	Initial filling water	Regular service water (*)
pH (with aluminium)		7 - 8	7 - 8,5
pH (without aluminium)		8,3 - 9,5	8,3 - 9,5
Hardness	°F	< 15	< 15
Electrical conductivity	µs/cm		< 500
Chlorides	mg/l		< 50
Oxygen (O_2)	mg/l		< 0,1
Iron (Fe)	mg/l	< 0,5	< 0,5 (**)
Copper (Cu)	mg/l	< 0,1	< 0,1 (**)
Aluminium (Al)	mg/l		< 0,1 (**)
Turbidity		Clear	Clear

(*) system water values after 8 weeks of operation;
(**) higher values are due to corrosion, to be eliminated.

General note on water used to top up systems:
- If softened water is used to top up a system, 8 weeks of functioning after topping up, verify that the water in the system respects the above limits, in particular for electrical conductivity
- This check is not necessary if demineralised water is used to top up the system.

2. Central heating systems

⚠ Do not use automatic filling devices to add water to central heating systems. Use a manual device instead and record top-ups in the system service book.

⚠ If there are more than one boiler, they must all be put into service either contemporarily or with a very low rotation time during the initial period of service, so as to evenly distribute the limited quantity of initial lime-scale.

⚠ A flushing cycle must be programmed after the plant has been installed to flush out any installation debris.

⚠ Water used to fill a system for the first time and water used to top it up must always be filtered (using synthetic or metal mesh filters with a filtration rating of no less than 50 microns) to prevent sludge from forming and triggering deposit corrosion.

⚠ The heating system must be flushed out and cleaned with good workmanship before filling up the existing systems. The boiler may not be filled until after the heating system has been flushed out.

2.1 New central heating systems
The system must be filled up slowly the first time; once it is filled and the air expelled it should never need to be topped up again. Systems should also be operated at maximum working temperature the first time they are started up, in order to facilitate de-aeration. (Gas is not released from the water at low temperatures).

2.2 Reconditioning old central heating systems
If a boiler has to be replaced, do not refill the entire central heating circuit if the quality of water in it conforms to requirements. If the quality of water fails to conform to requirements, either recondition the old water or separate the water circuits (water in the boiler circuit must conform to requirements).

3. Corrosion

3.1 Deposit corrosion
Under-deposit corrosion is an electrochemical process, due to the presence of sand, rust, etc., inside the mass of water. These solid substances generally deposit on the bottom of the boiler (sludge), on tube and pipe heads or in the gaps between pipes and tubes.
Micro-corrosion phenomena may be triggered off owing to the difference in electrochemical potential coming to be created between the material in contact with the impurity and the surrounding one.

3.2 Stray current corrosion
Corrosion from stray currents can occur due to the differing electrical potentials between water in the boiler and the metallic mass of the boiler or piping. This process leaves unmistakeable traces i.e. small regular conical holes.

⚠ All metallic parts should be grounded by an efficient earth cable for this reason.

4. Eliminating air and gas from central heating systems
If oxygen enters a circuit continuously or even intermittently (e.g. in under-floor heating systems whose pipes are not protected by impermeable synthetic sheaths, in circuits with open expansion vessels, or in circuits that require frequent top-ups) always separate the boiler's water circuit from the central heating circuit.

Mistakes to avoid and precautions.
From what we have seen it is therefore important to avoid two factors possibly leading to the above mentioned processes i.e. contact between air and water in the installation and regular topping up with fresh water.
To eliminate contact between air and water (and to prevent the latter from becoming oxidized), it is necessary:

- For the expansion system to be a closed vessel type, correctly scaled and with the correct pre-loading pressure (to be regularly checked)
- For the installation to always be at a higher pressure than that of the atmosphere at any point (comprising the pump suction side) and under all running conditions (all the water sealing and couplings in the installation are designed to resist pressure towards outside, but not for depression)
- That the installation will not be made with materials permeable to gas (e.g. plastic pipes for floor systems without anti-oxygen barrier).

⚠ Lastly we would remind you that the warranty does not cover breakdowns incurred by the boiler due to deposits and corrosion.

3.6.1 Use of antifreeze

Do not use automotive silicate-based antifreeze in the heating system.
In areas where freezing may occur, an antifreeze may be added to protect the system water. Please adhere to the specifications provided by the antifreeze manufacturer.

- Use the antifreeze manufacturer's data to determine the right antifreeze ratio for the desired protection temperature.
- Do not exceed 50% antifreeze mix ratio and do not use antifreezes other than those specifically designed for water heating systems.
- the chemical oxidation of the metals in the system also generates hydrogen.

3.6.2 Glycol

The percentage of propylene glycol which can be used is dependent on the maximum delivery temperature and the project ΔT as defined by the generator.

To calculate the freezing temperature associated with the mix and the maximum percentage to be used, please see the technical datasheet for the product used.

⚠ The values given in the tables refer to the **RIELLO** product.

Anti-freeze effect		
Glycol (%)	Temperature (°C)	Temperature (°F)
55	-40,4	-40,7
50	-32,4	-26,3
45	-26,0	-14,8
40	-21,5	-6,7
35	-17,6	0,3
30	-14,0	6,8
25	-10,7	12,7
20	-7,0	19,4
15	-4,0	24,8
10	-2,0	28,4

Mix boiling point								
P (bar)	Glycol (%)							T (°)
	25	30	35	40	45	50	55	
11,0	186,0	187,0	186,0	188,0	189,0	189,0	189,5	°C
	366,8	368,6	366,8	370,4	372,2	372,2	373,1	°F
10,0	181,5	182,0	182,5	183,0	184,0	185,0	186,5	°C
	358,7	359,6	360,5	361,4	363,2	365,0	367,7	°F
9,0	176,5	177,0	177,5	178,0	179,5	181,0	182,5	°C
	349,7	350,6	351,5	352,4	355,1	357,8	360,5	°F
8,0	171,5	172,0	172,5	173,0	174,0	175,0	176,0	°C
	340,7	341,6	342,5	343,4	345,2	347,0	348,8	°F
7,0	166,0	166,5	167,0	167,5	168,0	168,5	170,0	°C
	330,8	331,7	332,6	333,5	334,4	335,3	338,0	°F
6,0	159,0	159,5	160,5	161,0	161,5	162,0	163,5	°C
	318,2	319,1	320,9	321,8	322,7	323,6	326,3	°F
5,0	152,5	153,0	154,0	155,0	156,0	157,0	158,0	°C
	306,5	307,4	309,2	311,0	312,8	314,6	316,4	°F
4,0	144,5	145,0	145,5	146,0	147,0	148,0	149,0	°C
	292,1	293,0	293,9	294,8	296,6	298,4	300,2	°F
3,5	141,5	142,0	142,5	143,0	143,5	144,0	145,0	°C
	286,7	287,6	288,5	289,4	290,3	291,2	293,0	°F
2,0	122,5	123,0	123,5	124,0	125,0	126,0	127,0	°C
	252,5	253,4	254,3	255,2	257,0	258,8	260,6	°F
1,0	100,5	101,0	101,5	102,0	103,0	104,0	105,0	°C
	212,9	213,8	214,7	215,6	217,4	219,2	221,0	°F

IMPORTANT INFORMATION REGARDING HEAT-TRANSFER FLUIDS
Heat-transfer fluids are particularly important for protecting the system: efficient heat exchange, thanks to a good specific heat capacity; anti-freeze properties, important for the life of the system in the winter; and anti-corrosion properties to preserve the heating system components.

When choosing a heat-transfer fluid, consider the following:
- **toxicity** in the event of leakage, contaminating domestic water or water for animal/human use/contact
- **biodegradability** in the event of leakage into the environment

All heat-transfer fluids recommended by **RIELLO** are non-toxic and in large part biodegradable.

⚠ Choose the liquid carefully and manage the heating system correctly to keep monitoring and maintenance work to a minimum, and reduce fluid changes.

⚠ Use propylene glycol-based, non-polluting antifreeze concentrate with corrosion inhibitors for heating systems.

⚠ Do not use the mixture with other antifreeze liquids; always use the same one.

⚠ Use chemically non-hazardous liquid.

⚠ It is mandatory to check the percentage of glycol according to the antifreeze effect on the data sheet of the purchased product.

⚠ It is recommended to check the compatibility of the purchased product with the circuit sealing materials, e.g. elastomers or plastics.

⚠ It is recommended to use a filter on the primary circuit to purify the Propylene Glycol.

⚠ The system must not have any galvanised tanks or pipes on the primary side, as zinc can be dissolved by mixtures of propylene glycol and water.

3.7 Water-side pressure drop

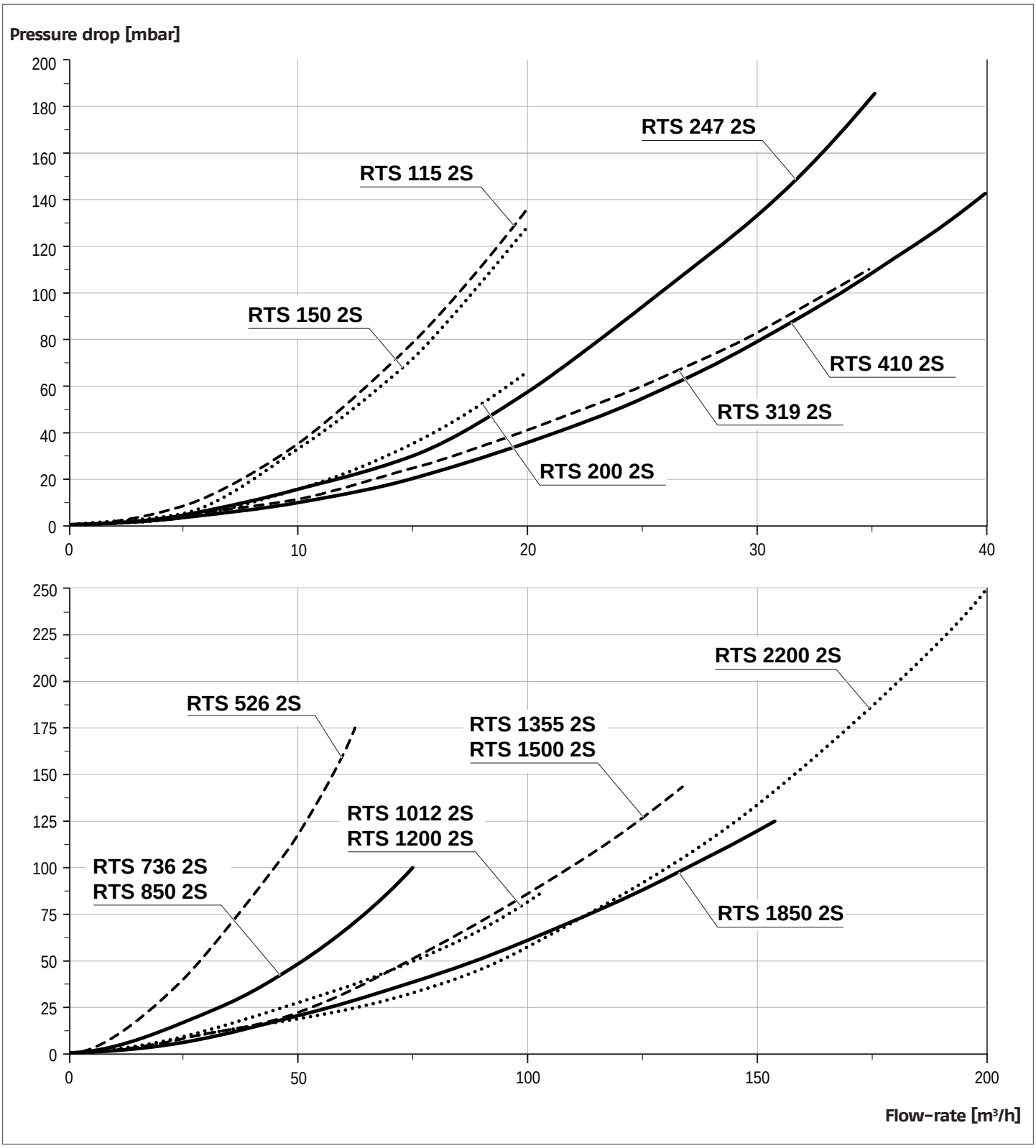

3.8 Water connections

Steel boilers **RIELLO RTS 2S** are designed and built to be installed on heating systems and also for the production of domestic hot water if connected to suitable systems.
The characteristics of the water fittings are shown in the table.

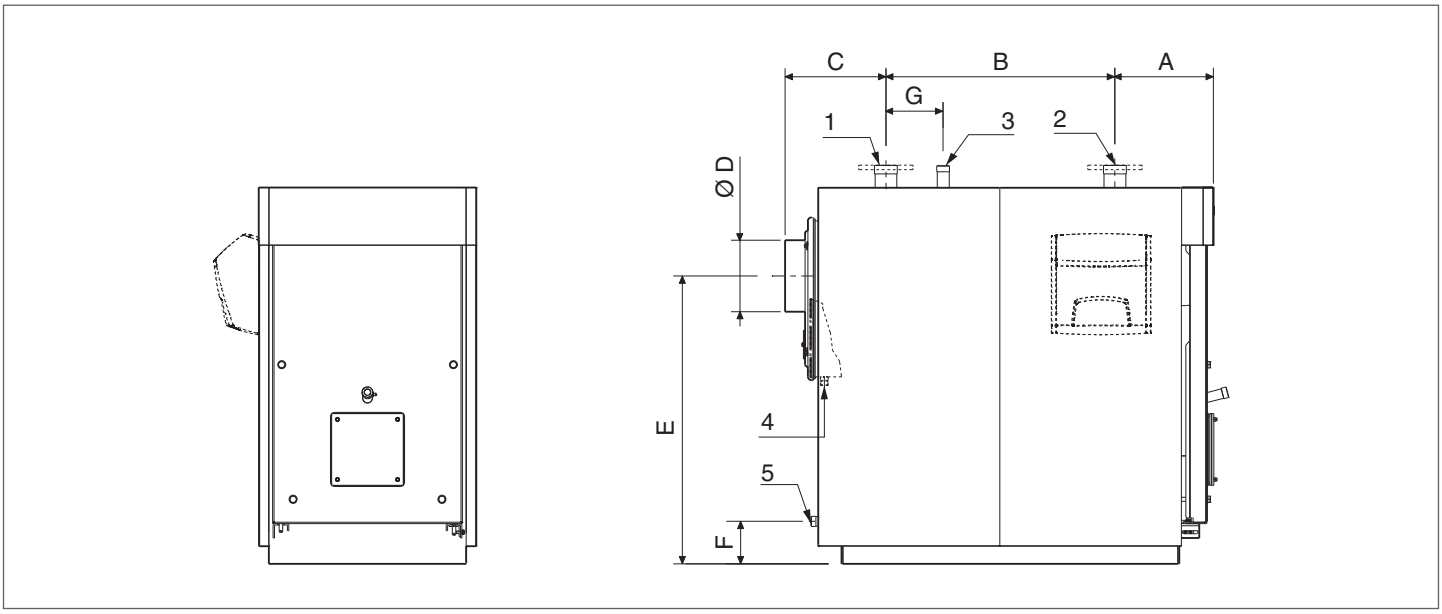

⚠ The choice of system components and the method of their installation are left up to the installer. Installers must use their expertise to ensure proper installation and functioning in compliance with all applicable legislation.

⚠ Circuits filled with anti-freeze must be fitted with water disconnectors.

DESCRIZIONE		CALDAIA RTS 2S															
		115	150	200	247	319	410	526	736	850	1012	1200	1355	1500	1850	2200	
1	System delivery (*)	2"	2"	2"1/2	2"1/2	2"1/2	80	80	100	100	125	125	125	125	150	150	G"/DN
2	System return (*)	2"	2"	2"1/2	2"1/2	2"1/2	80	80	100	100	125	125	125	125	150	150	G"/DN
3	Safety device fitting	1"1/4	1"1/4	1"1/4	1"1/4	1"1/4	1"1/4	1"1/2	1"1/2	1"1/2	2"1/2	2"1/2	2"1/2	2"1/2	80	80	G"/DN
4	Condensate outlet	3/4"	3/4"	3/4"	3/4"	3/4"	3/4"	3/4"	3/4"	3/4"	1"	1"	1"	1"	1"	1"	G"/DN
5	Boiler drain	3/4"	1"	1"	1"	1"	1"	1"1/4	1"1/4	1"1/4	1"1/4	1"1/4	1"1/4	1"1/4	1"1/4	1"/1/2	G"/DN
A		320	335	348	348	360	390	395	450	450	512	512	514	514	563	590	mm
B		530	650	800	800	890	1085	1200	1400	1400	1570	1570	1865	1865	2030	2300	mm
C		305	345	352	352	410	485	490	525	525	575	575	575	575	580	570	mm
D		180	200	250	250	250	250	300	350	350	400	400	400	400	450	450	Ø
E		870	946	1005	1005	1130	1130	1290	1405	1405	1445	1445	1580	1580	1695	1760	mm
F		175	150	148	148	187	187	185	205	205	190	190	218	218	190	210	mm
G		130	200	200	200	200	300	250	300	300	350	350	350	350	700	1000	mm

(*) All flanged connections are PN6 according to EN 1092-1.

3.8.1 Schematic diagram

Central heating and domestic hot water production

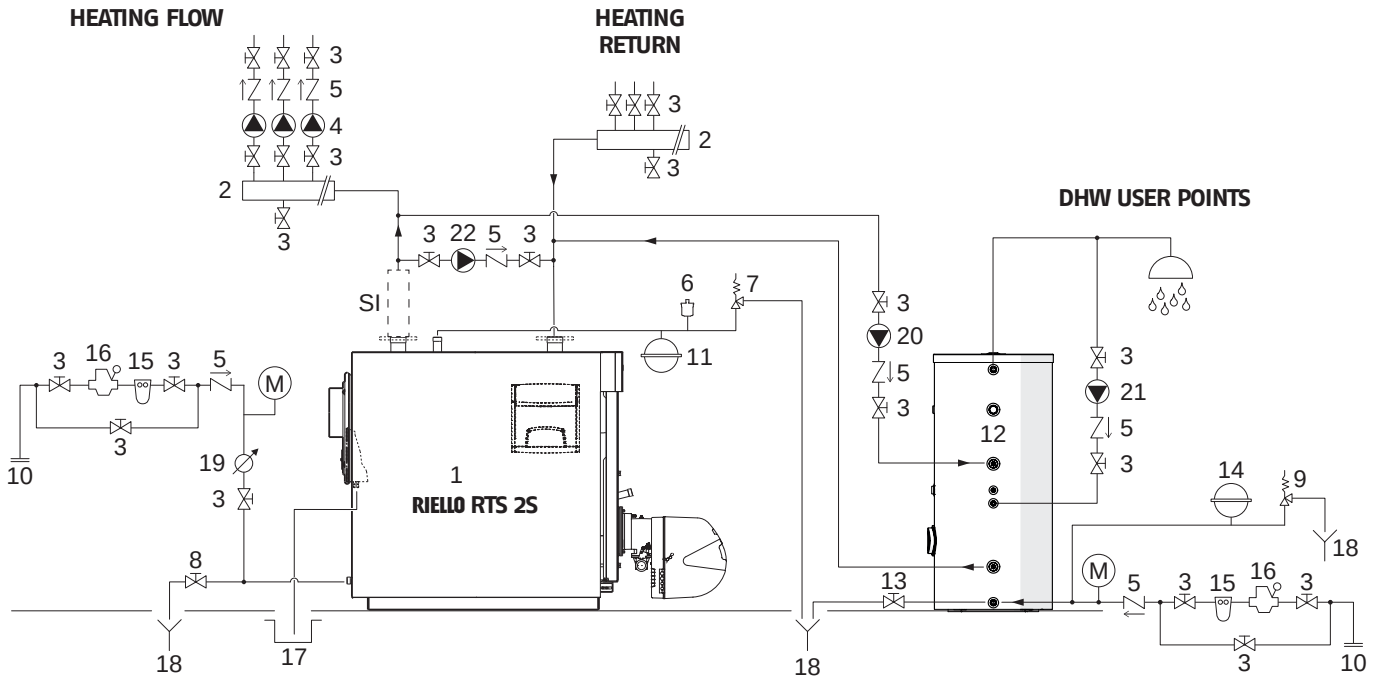

1 Boiler **RIELLO RTS 2S**
2 Central heating system manifolds
3 Disconnect valves
4 System pumps
5 Non-return valves
6 Automatic vent valve
7 Boiler safety valve
8 Boiler drain cock
9 Storage cylinder safety valve
10 System filling cock
11 CH expansion vessel
12 Remote controlled water tank
13 Storage cylinder drain cock
14 DHW expansion vessel
15 Water softener filter
16 Pressure reducer
17 Condensate outlet
18 Drain
19 Water supply/top-up counter
20 DHW circulator
21 DHW circulation pump
22 Anti-condensate pump

M Pressure gauge
SI System safety kit (install according to local regulations)

⚠ Domestic hot water and central heating circuits must be completed with expansion vessels of adequate capacity and suitable, correctly-sized safety valves. The discharge of safety valves and appliances must be connected to a suitable collection and disposal system (see Catalogue for compatible accessories).

⚠ The selection and the installation of the components of the system is the responsibility of the installer, who must operate in accordance with good practice and current Legislation.

⚠ Circuits filled with anti-freeze must be fitted with water disconnectors.

⚠ Special supply/reintegration water should be conditioned with appropriate treatment systems. The values stated in the table on page 22 can be used as a reference.

3.9 Anti-condensate pump

An anti-condensate pump must be used in order to prevent damage to the boiler during the transient periods and before the system is started up. The pump must ensure a flow rate of between 20 and 30% of the total flow rate during the system operating periods, must ensure a return water temperature of not less than the minimum permissible return water temperature (see technical data) and must delay its own shutdown by at least 3 minutes at the beginning of prolonged periods of boiler shutdown (night-time total shutdown, weekends, etc.).

⚠ A sensor socket must be positioned at a distance of 3 to 5 times the diameter of the water return pipe, upstream from the water fitting, to measure effective water return temperature and control the anti-condensate pump or the temperature controller stabilisation function.

⚠ Any temperature controllers installed remotely from the control panel must be compatible with the system's electrical connections and functioning logic.

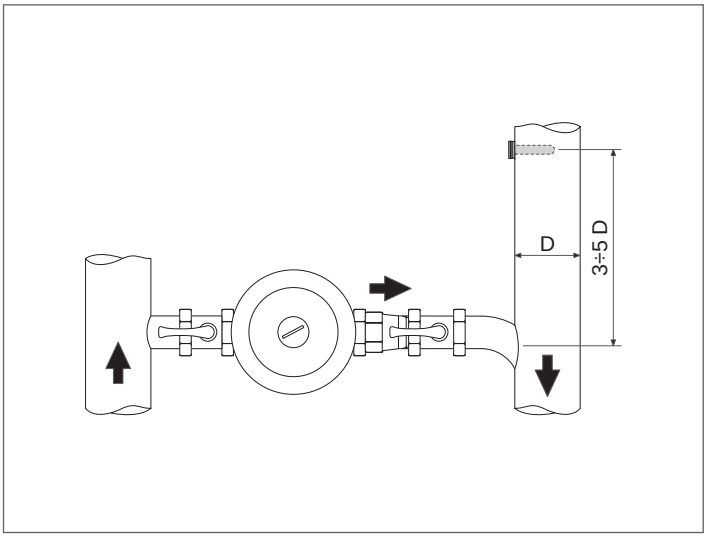

3.10 Discharge of combustion products

The flue gas exhaust and stack connection must be made in compliance with applicable laws and standards, using heat resistant, condensate resistant and stress resistant rigid pipe and sealed joints.
The stack must be fitted with a condensate trap and drain and the flue gas exhaust pipe must be installed at a slope of at least 3° towards the boiler.

DIMENSIONS (mm)		CALDAIA RTS 2S															
		115	150	200	247	319	410	526	736	850	1012	1200	1355	1500	1850	2200	
ø	Diameter of flue gas fitting	180	200	250	250	250	250	300	350	350	400	400	400	400	450	450	mm
H	Height of flue gas outlet	870	946	1005	1005	1130	1130	1290	1405	1405	1445	1445	1580	1580	1695	1760	mm

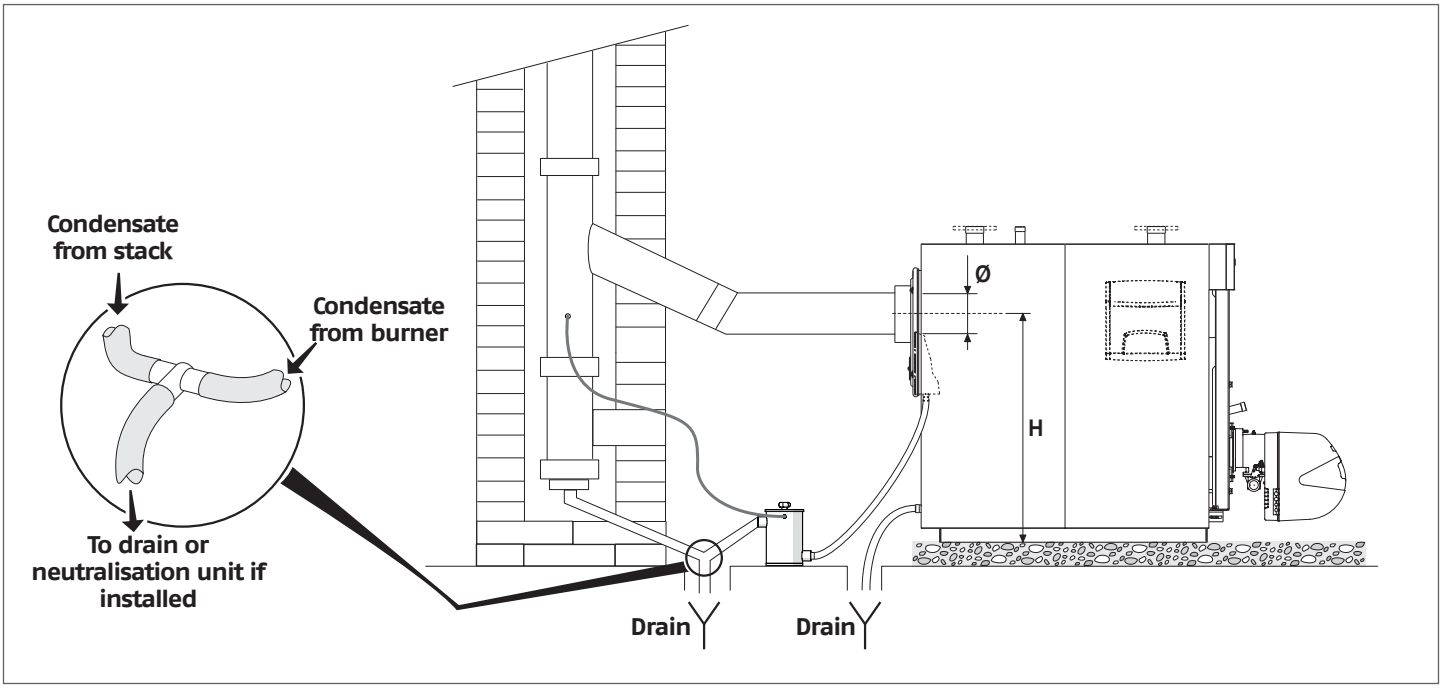

⚠ The stack must guarantee the minimum draught specified by applicable technical standards, assuming zero pressure at the connection to the flue gas exhaust.

⚠ Inadequate or badly dimensioned stacks and flues can increase combustion noise and affect combustion parameters

⚠ Joints must be sealed using suitable materials (e.g. filler, mastic or silicon based sealant).

⚠ Uninsulated flues are potentially dangerous and can cause burns.

⚠ For each boiler used, the horizontal exhaust duct must be connected to the vertical one using the 45° connectors.

⚠ When more than one boiler is installed in the boiler room, it is recommended to use separate flue-gas stacks for each boiler.

3.11 Door hinges

Boilers are fitted with three door hinge points in the factory. The doors are initially fitted to open to the right. If you need to change the door to open to the left, make the necessary modifications before performing any tests that require the boiler door to be opened. Proceed as instructed below to change the direction of door opening.

⚠ Once you have decided on the direction of door opening and the door opens successfully, remove the unused hinge assembly B.

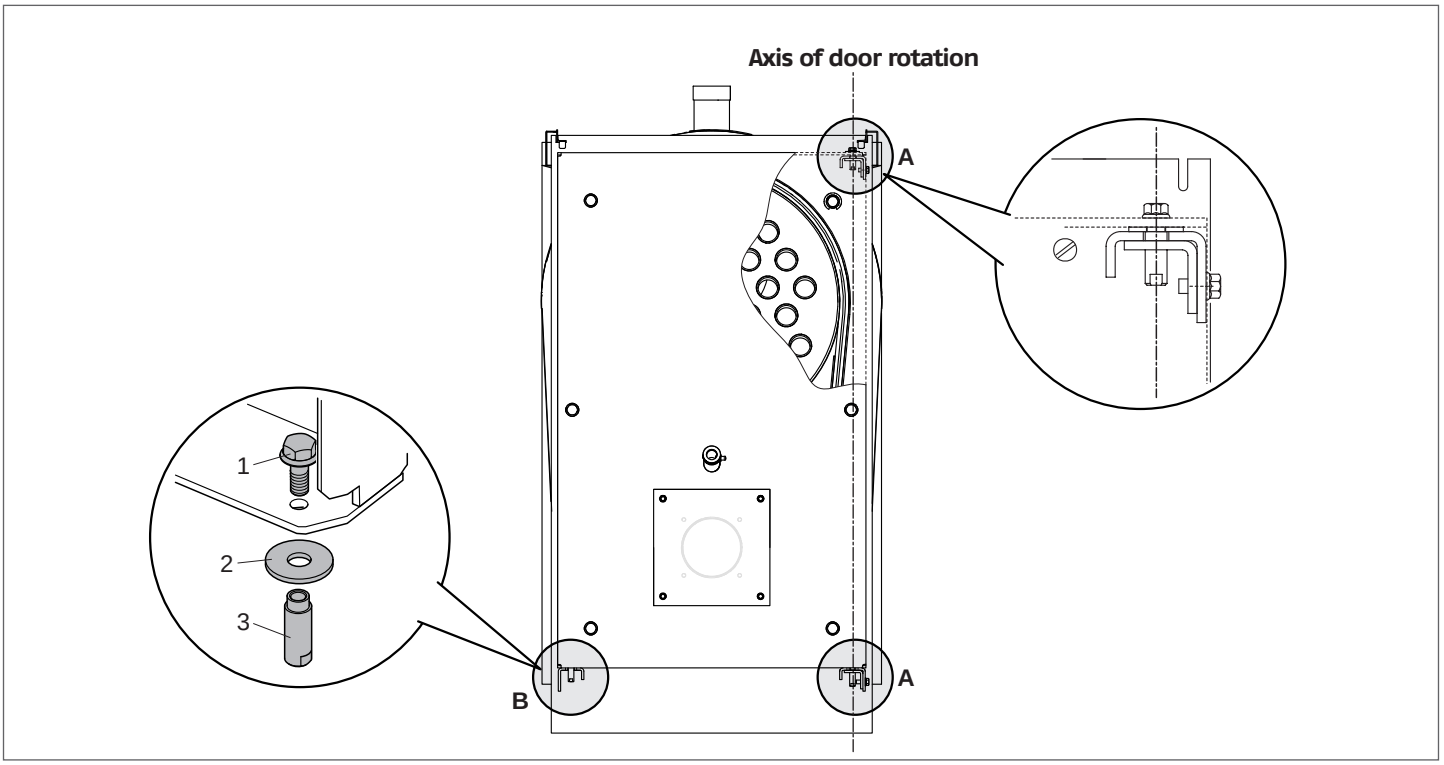

3.12 Changing the direction of door opening

⚠ Perform this operation before starting the boiler up for the first time and before opening the door.

⚠ When the door is not fitted correctly to the hinges, it must only be handled using equipment appropriate to its weight and using suitable personal protective equipment.

	CALDAIA RTS 2S								
	115	150	200	247	319	410	526	736	
Door weight	62	51.5	54	54	72.5	72.5	99	137.5	kg

	CALDAIA RTS 2S							
	850	1012	1200	1355	1500	1850	2200	
Door weight	137.5	153	153	168	168	197	500	kg

If you wish to modify the door to open to the left, i.e. with the hinges on the left, proceed as follows:

3.12.1 System A – RTS 115 ÷ 410 2S

- First ensure that the main door fixing bolts (1) are tight and then remove the safety bolts (2).
- And lift off the door fixing brackets (3)

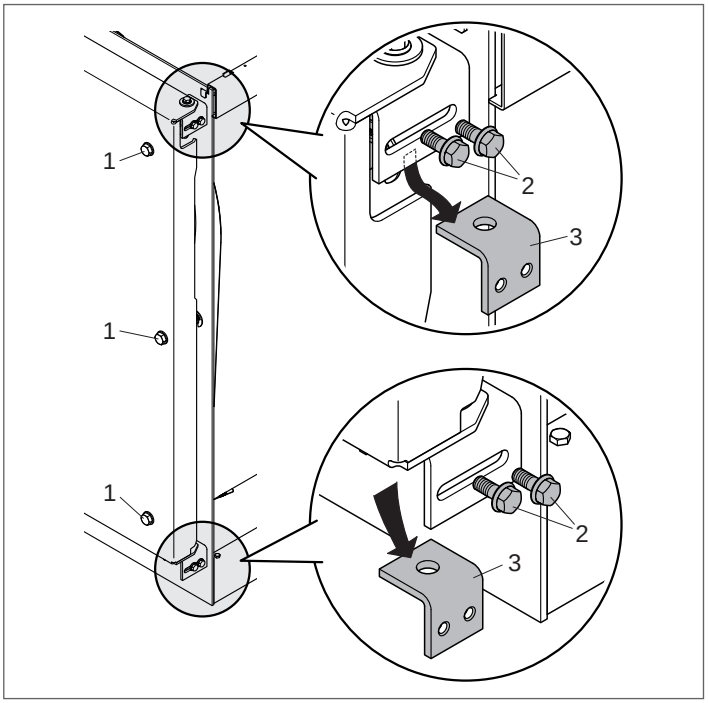

- Insert a spanner through the top slot and hold the bushing (4) steady.
- Unscrew the top bolt (5), then remove the bushing (4) and washer (6).

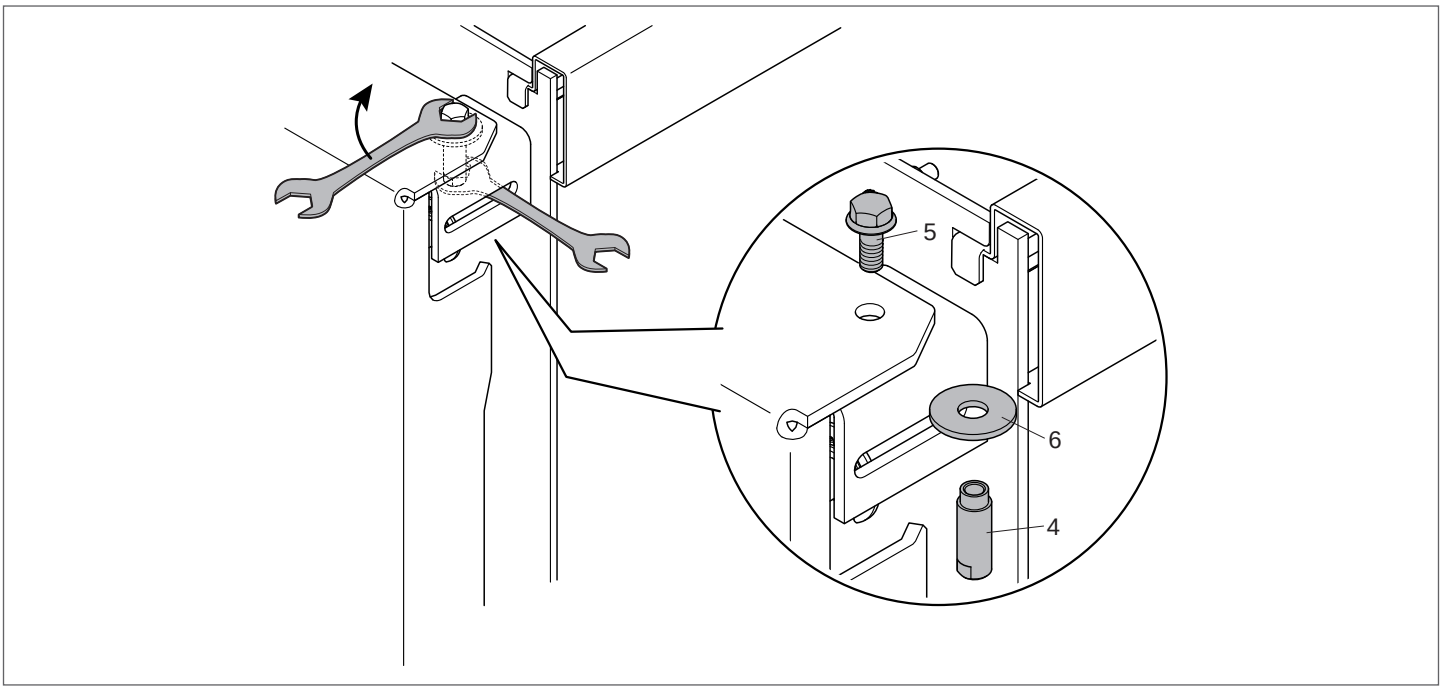

- Fit the bushing (4), bolt (5) and washer (6) to the opposite side of the door.

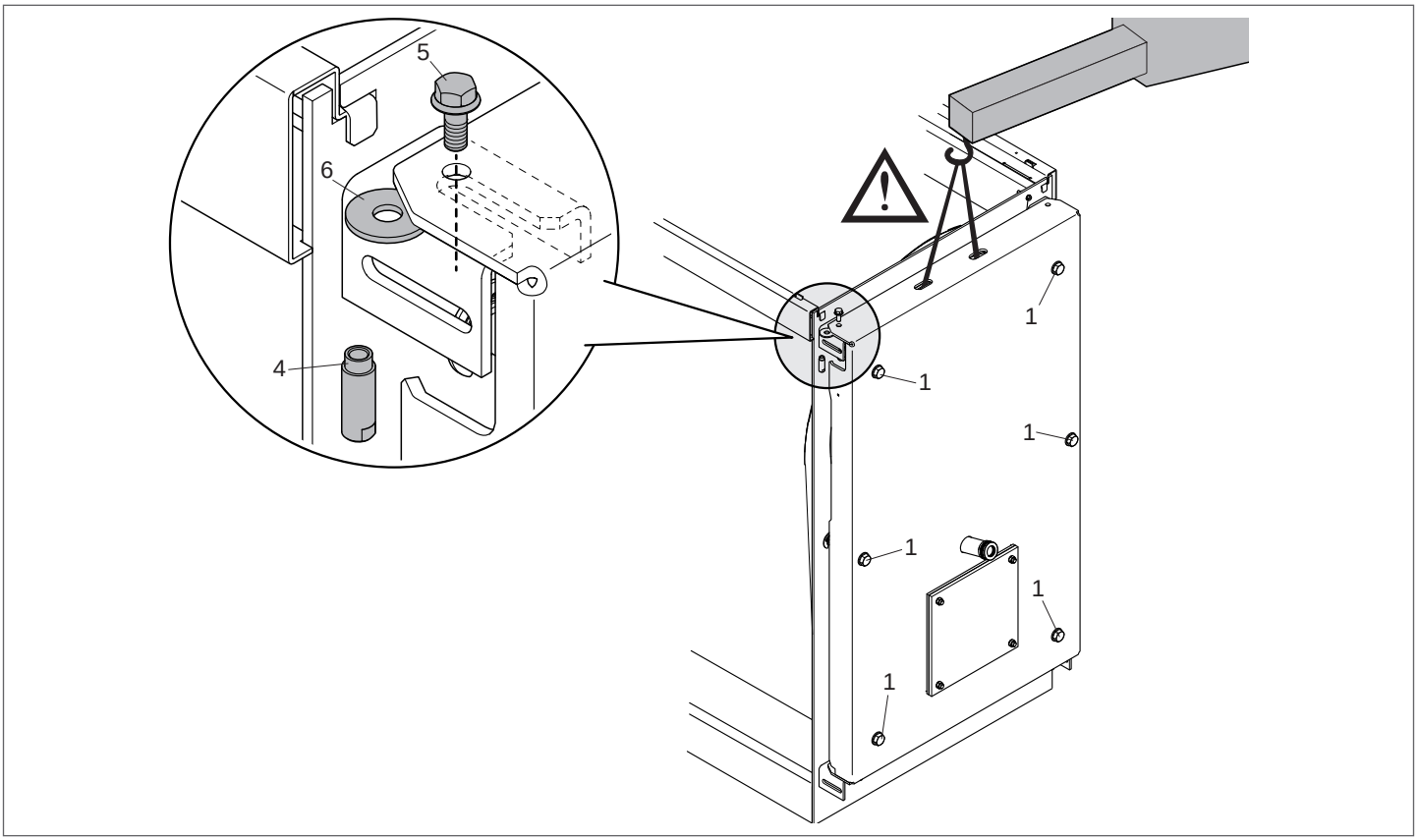

⚠ If there are alignment and height issues with the door when inserting the pin-locking assembly (4-5-6), slacken the fixing bolts (1) slightly and lift up the door to make it easier to insert the washer (6).

⚠ To lift the door, use suitable equipment for its weight and wear appropriate personal protective equipment. Once the washer (6) has been inserted, position the screw and bushing, and tighten them.

- Fit the top door stop bracket (3) to the opposite side of the door and fix it in place with the safety bolts (2).
- Fit the bottom door stop bracket (3) to the opposite side of the door and fix it in place with the safety bolts (2).

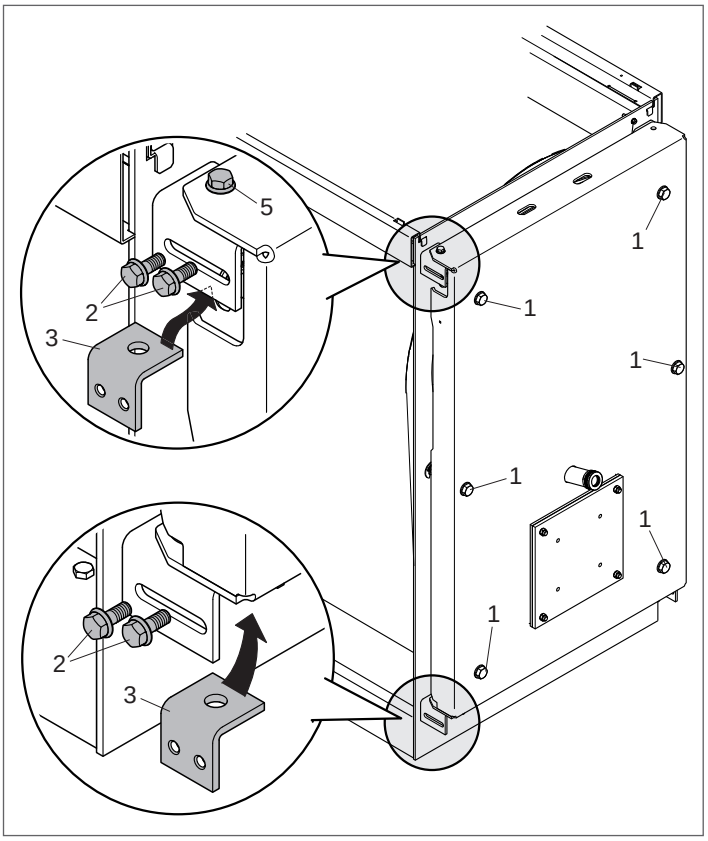

⚠ Make sure that the safety bolts (2) and (5) are securely tightened before attempting to open the door.

- Completely unscrew the main fixing bolts (1) and open the door (these bolts are captive in the door and cannot be removed).
- Remove pin assembly "B" (screw (5), bushing (4) and washer (6)) positioned on the opposite side to the door rotation axis.

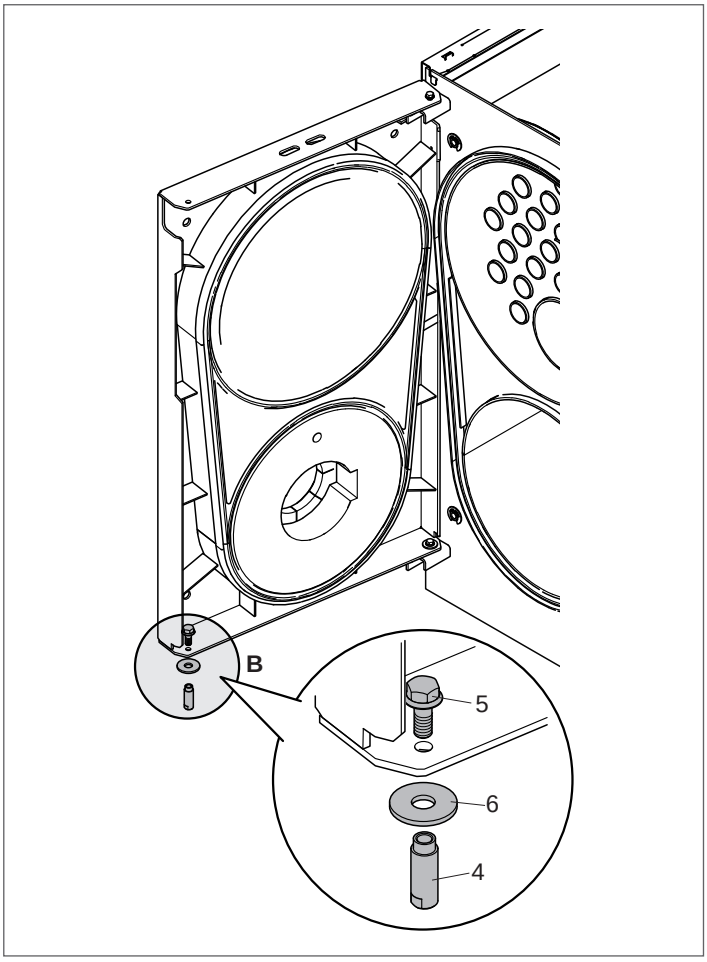

3.12.2 System B - RTS 526 ÷ 1850 2S

- Use a blade or alternative saw edge to remove the pre-cut parts (A) at the front end, on the opposite side to the door hinges.
- If necessary, unscrew the screws (1) and open the door to do this from the front.

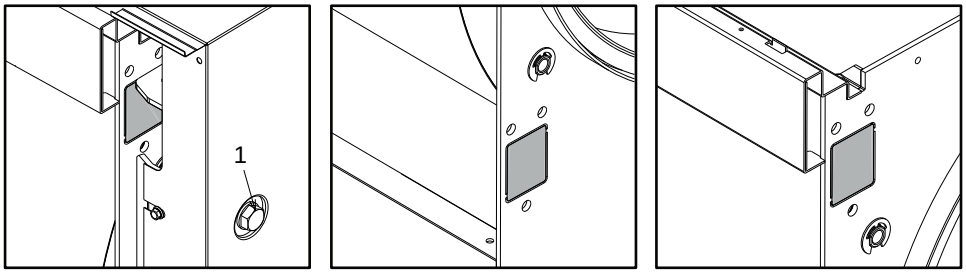

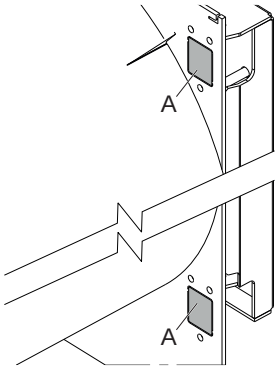

- Close the door and secure it with the screws (1).
- Remove the cap (2) from the bottom hinge, paying attention to the pressure of the spring inside (3).
- Remove the screws (4).
- Tighten the adjustment pin (5) to lower it.
- Remove the bolts (6) and slide out, from the inside, the hinges (7) supporting the door.

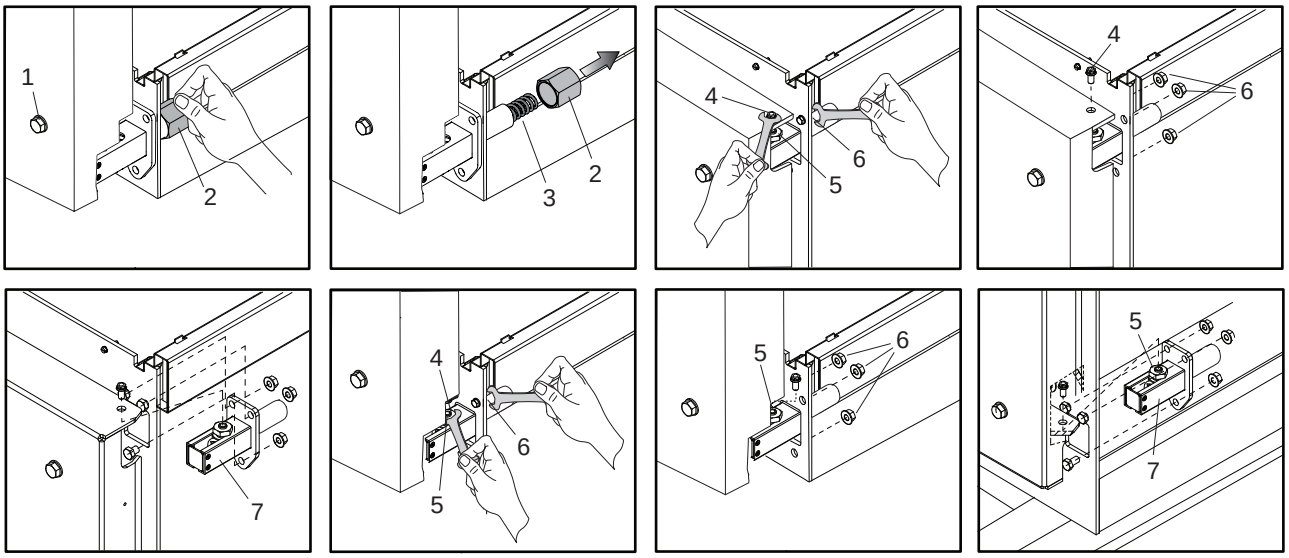

- Restore opening on the other side by repeating the sequence in reverse order.

Take care when assembling the adjustment pin:

- Unscrew the adjustment pin (5) to lift it.
- Check the pin groove (5) is slotted correctly into the door hole.
- Tighten the screws (4) and check the door opens/closes correctly.

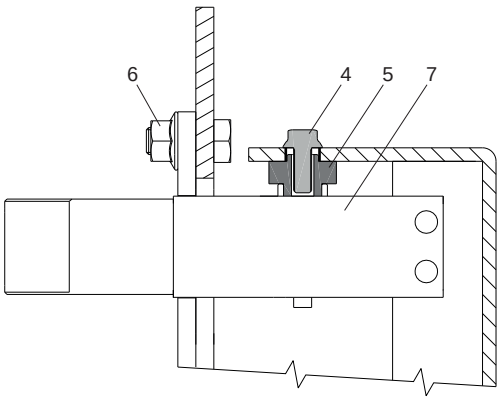

3.12.3 System C - RTS 2200 2S

- Check that the main locking screws (1) are fully tightened.

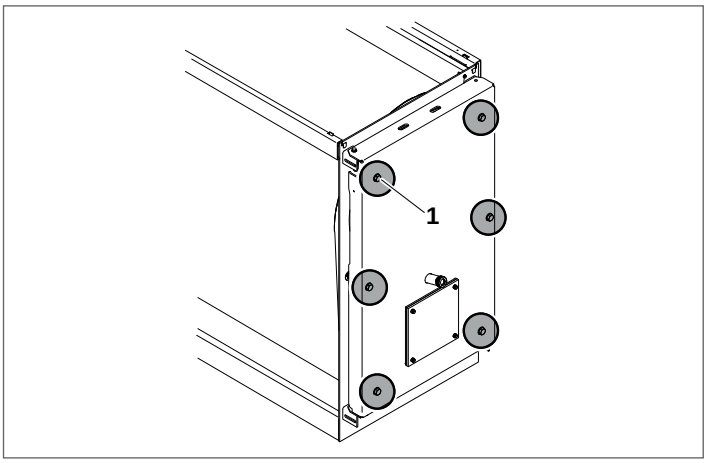

- Use a blade or alternative saw edge to remove the pre-cut parts (A) at the front end, on the opposite side to the door hinges.

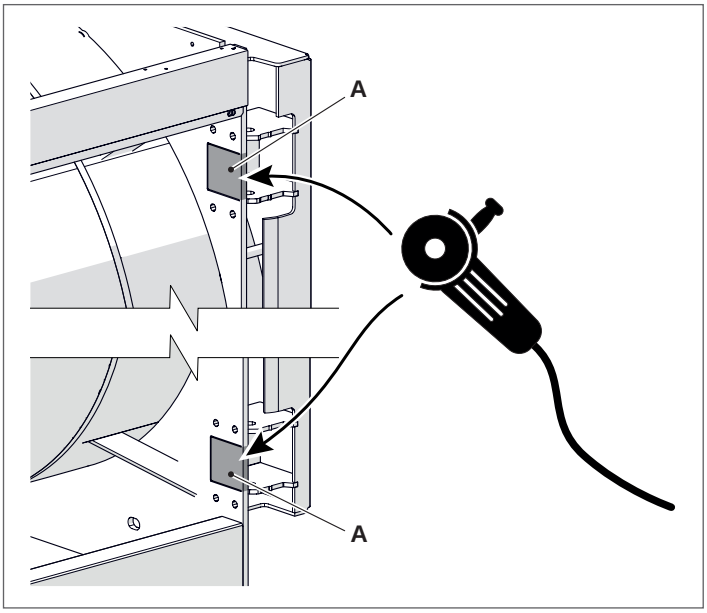

Top hinge

- Loosen the bolts (1) and remove the snap ring (2).
- Remove the through bolt (3).

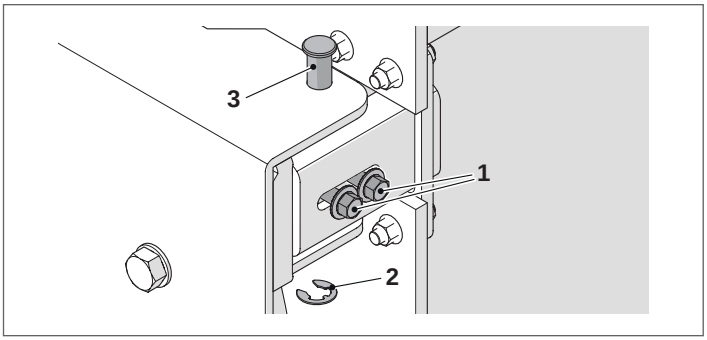

- Unscrew the four nuts (4), remove the bracket (5) and refit it on the opposite side by reversing the sequence of actions.

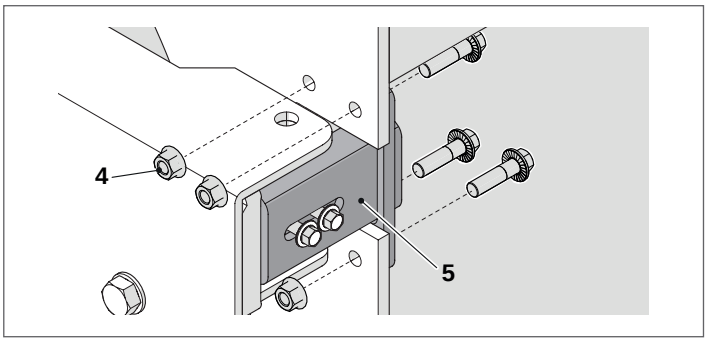

Bottom hinge

- Loosen the nuts (1).
- Loosen the nut (2), unscrew and remove the through bolt (3).

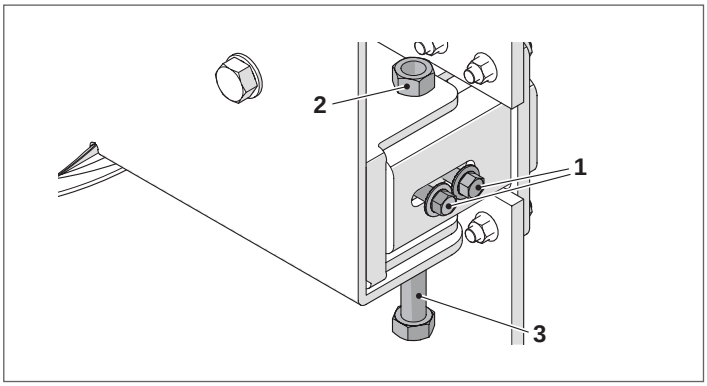

- Unscrew the four nuts (4), remove the bracket (5) and refit it on the opposite side by reversing the sequence of actions.

Closing the hinge holes

- Install the plates (6) on this side and tighten them with the nuts (7).

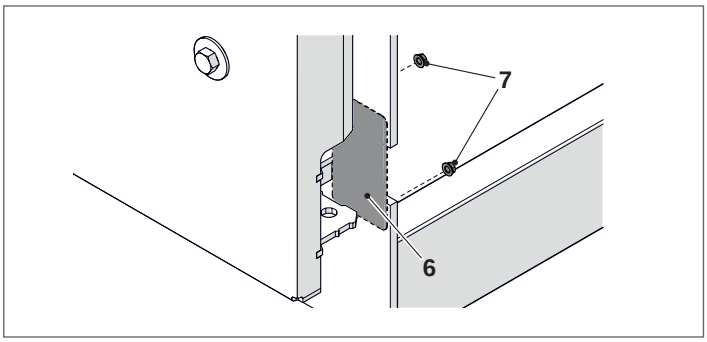

3.13 Earth connection

For the earthing of the boiler body, a connection point is provided in the centre of the frame to be connected to an effective earthing system.
Proceed as follows:

- Unscrew the nut and washer (1) from the earth terminal
- Attach the earth cable's eye connector (2) to the terminal. (Make sure that the cable is of adequate size and complies with legislation in the country of installation)
- Fit the nut and washer (1) to the earth terminal and tighten the nut
- Connect the other end of the cable to the system's earth bar.

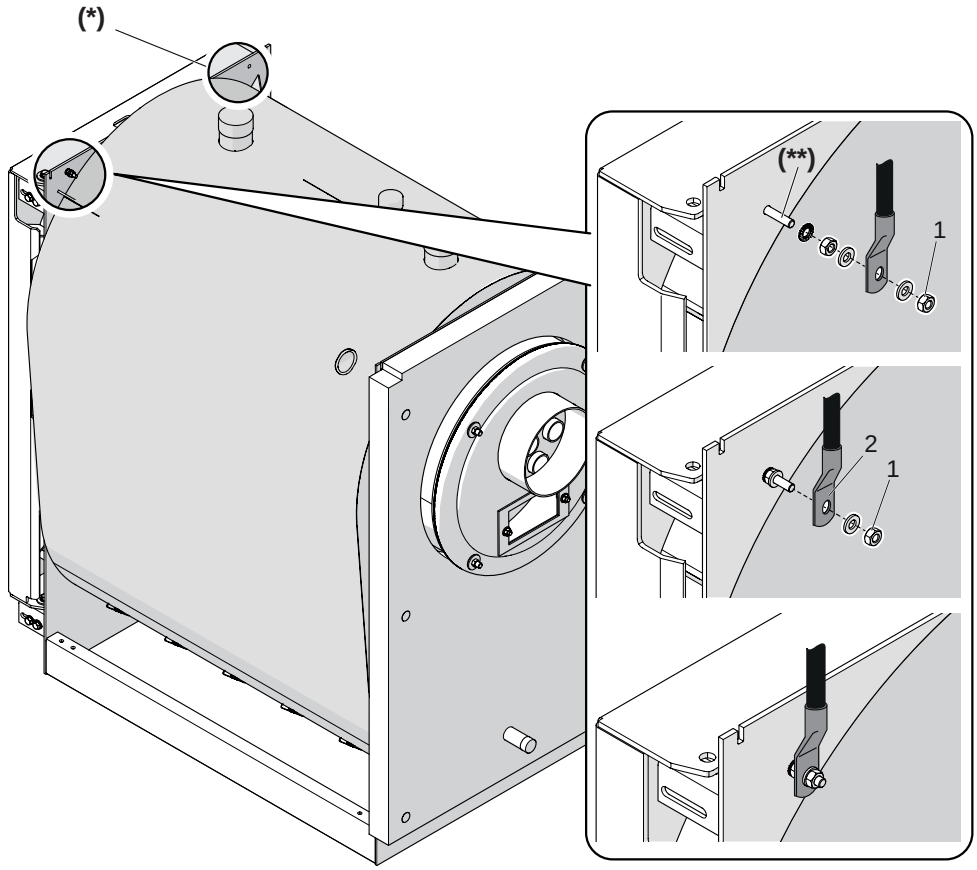

(**) **M6x30 brass**

⚠ On the left side there is another hole (*) where the earth connection can be made. If you wish to use this hole for the earth connection, remove the terminal fittings from the right of the head and move them to the left earthing point.

3.14 Fitting the casing panels

3.14.1 Models RTS 115 ÷ 850 2S

To mount the panelling, proceed as follows:

- Open the pre-cut slots located on the side panel (3-4-5-6) (depending on which side you want to install the chosen control panel (12) on), at the "oval" cable glands on the control panel.
- Perforate the membranes of the control panel cable grommets. Route the electrical cables through them and insert the sensors in their sockets.
- Fasten the control panel (12) to the panelling using the screws supplied.
- Assemble the side members (1) and cross members (2).
- Lay the side panels (3-4-5-6) on the side members securing the panelling and let them slide down from top to bottom. Take care to match the holes on the top with the fastening pins on the side members, and check that the bracket on the bottom part engages with the baseplate side members.
- Secure the side panels with the cross members (7), using the screws provided.
- Mount the control panel referring to the relevant manual.
- Prepare the cables for the electrical connections and insert the bulbs/probes into the probe holders.

⚠ USE THE COPPER SHEATH (P) TO INSERT THE BULBS/PROBES OF THE SAFETY DEVICES (SEE "LOCATION OF SENSORS").

- Insert the cable glands (supplied) into the slots provided on the panelling.
- Then assemble the front top panel (10) and centre top panels (8-9) to completely close the top.
- To complete the panelling, place the faceplate (11) on top of the door.

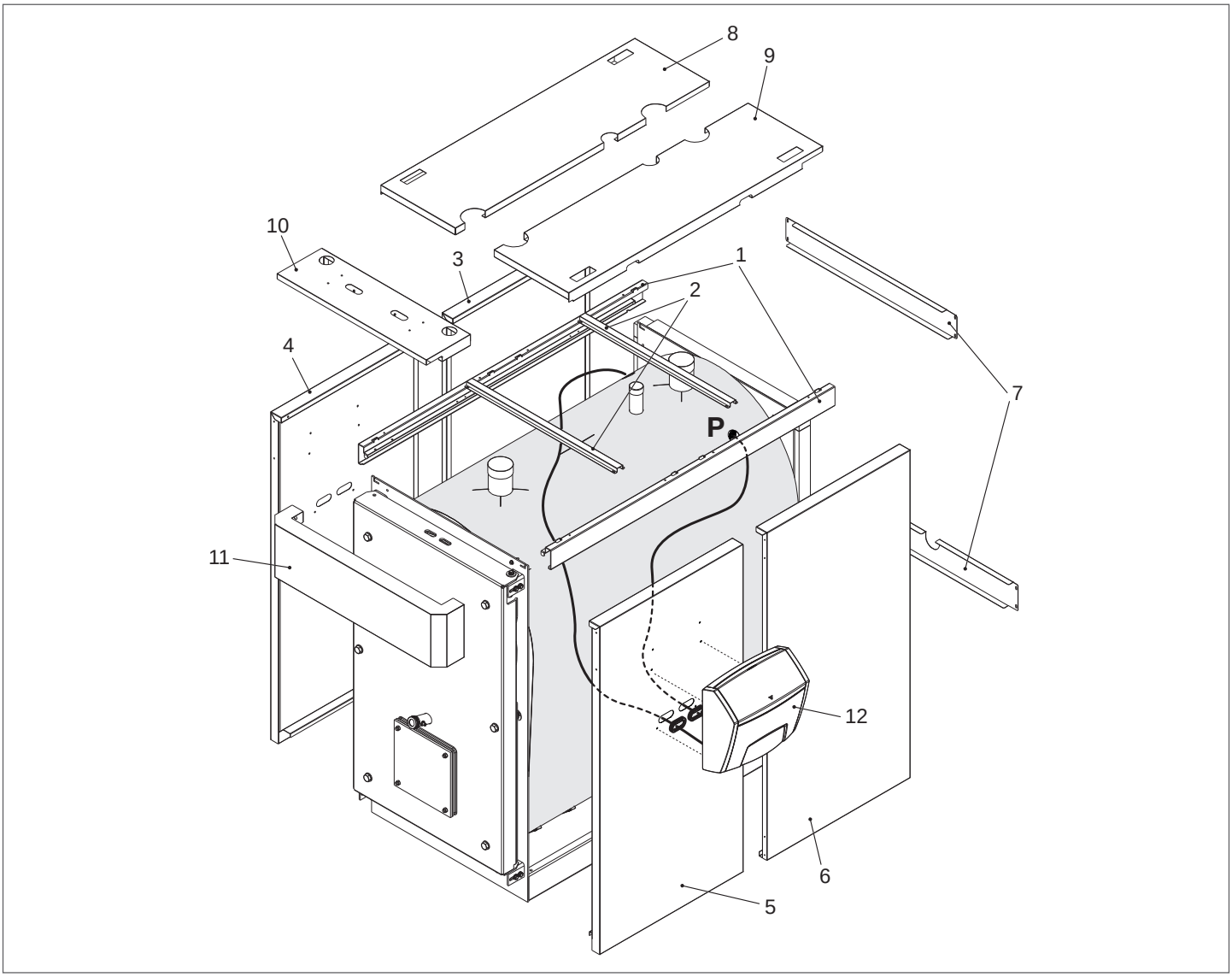

3.14.2 Models RTS 1200 ÷ 1850 2S

To mount the panelling, proceed as follows:

- Open the pre-cut slots located on the side panel (3-4-5-6-13-14) (depending on which side you want to install the chosen control panel (12) on), at the "oval" cable glands on the control panel.
- Perforate the membranes of the control panel cable grommets. Route the electrical cables through them and insert the sensors in their sockets.
- Fasten the control panel (12) to the panelling using the screws supplied.
- Assemble the side members (1) and cross members (2).
- Lay the side panels (3-4-5-6-13-14) on the side members securing the panelling and let them slide down from top to bottom. Take care to match the holes on the top with the fastening pins on the side members, and check that the bracket on the bottom part engages with the baseplate side members.
- Secure the side panels with the cross members (7), using the screws provided.
- Mount the control panel referring to the relevant manual.
- Prepare the cables for the electrical connections and insert the bulbs/probes into the probe holders.

⚠ **USE THE COPPER SHEATH (P) TO INSERT THE BULBS/PROBES OF THE SAFETY DEVICES (SEE "LOCATION OF SENSORS").**

- Insert the cable glands (supplied) into the slots provided on the panelling.
- Then assemble the front top panel (10), the rear panel (15) and centre top panels (8-9) to completely close the top.
- To complete the panelling, place the faceplate (11) on top of the door.

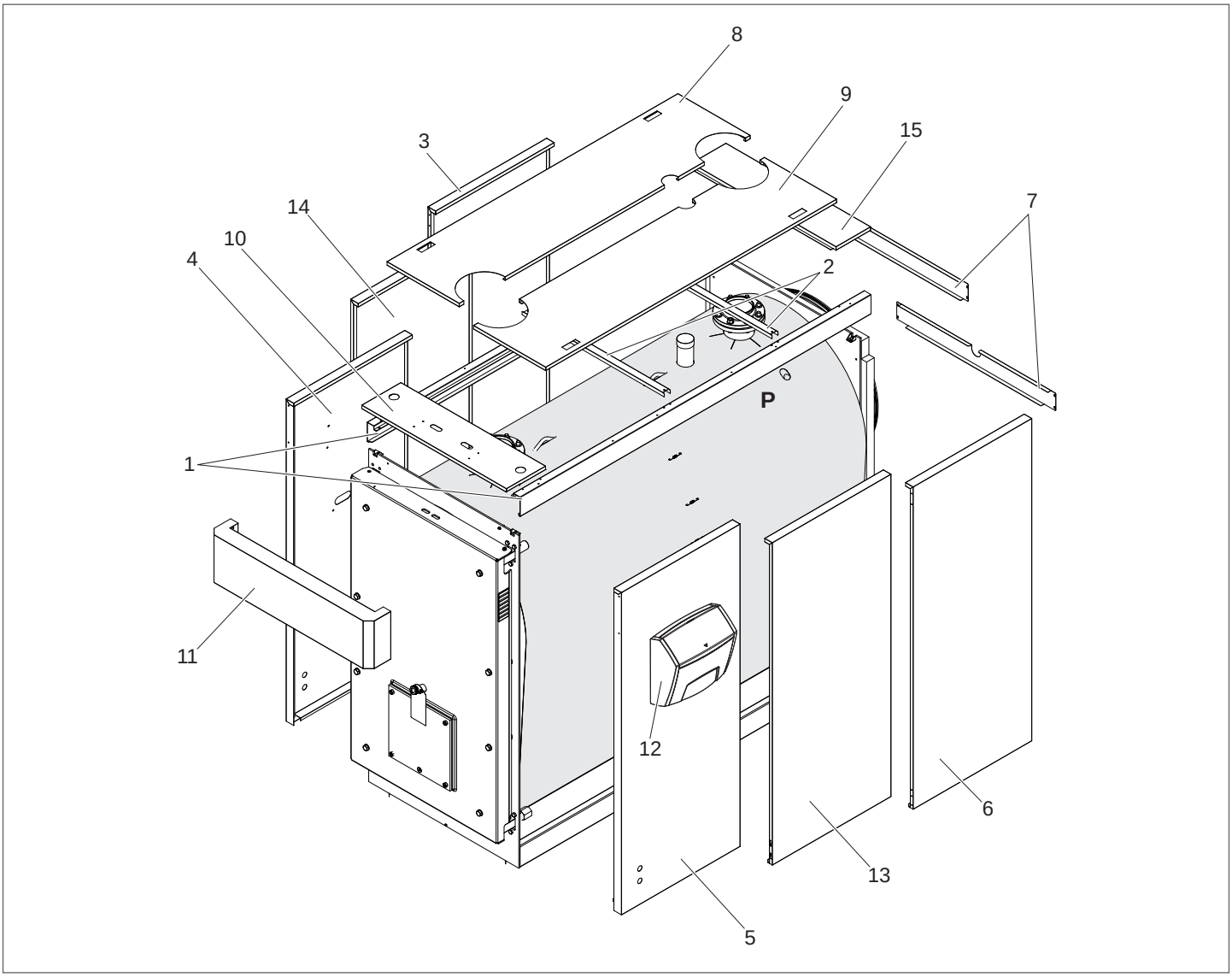

3.14.3 Model RTS 2200 2S

To mount the panelling, proceed as follows:

- Open the pre-cut slots located on the side panel (1-2-3-4-11-12) (depending on which side you want to install the chosen control panel (10) on), at the "oval" cable glands on the control panel.
- Perforate the membranes of the control panel cable grommets. Route the electrical cables through them and insert the sensors in their sockets.
- Fasten the control panel (10) to the panelling using the screws supplied.
- Assemble the side members (1) and cross members (2).
- Lay the side panels (1-2-3-4-11-12) on the side members securing the panelling and let them slide down from top to bottom. Take care to match the holes on the top with the fastening pins on the side members, and check that the bracket on the bottom part engages with the baseplate side members.
- Secure the side panels with the cross members (5), using the screws provided.
- Mount the control panel referring to the relevant manual.
- Prepare the cables for the electrical connections and insert the bulbs/probes into the probe holders.

⚠ USE THE COPPER SHEATH (P) TO INSERT THE BULBS/PROBES OF THE SAFETY DEVICES (SEE "LOCATION OF SENSORS").

- Insert the cable glands (supplied) into the slots provided on the panelling.
- Then assemble the front top panel (8), the rear panel (13) and centre top panels (6-7) to completely close the top.
- To complete the panelling, place the faceplate (9) on top of the door.

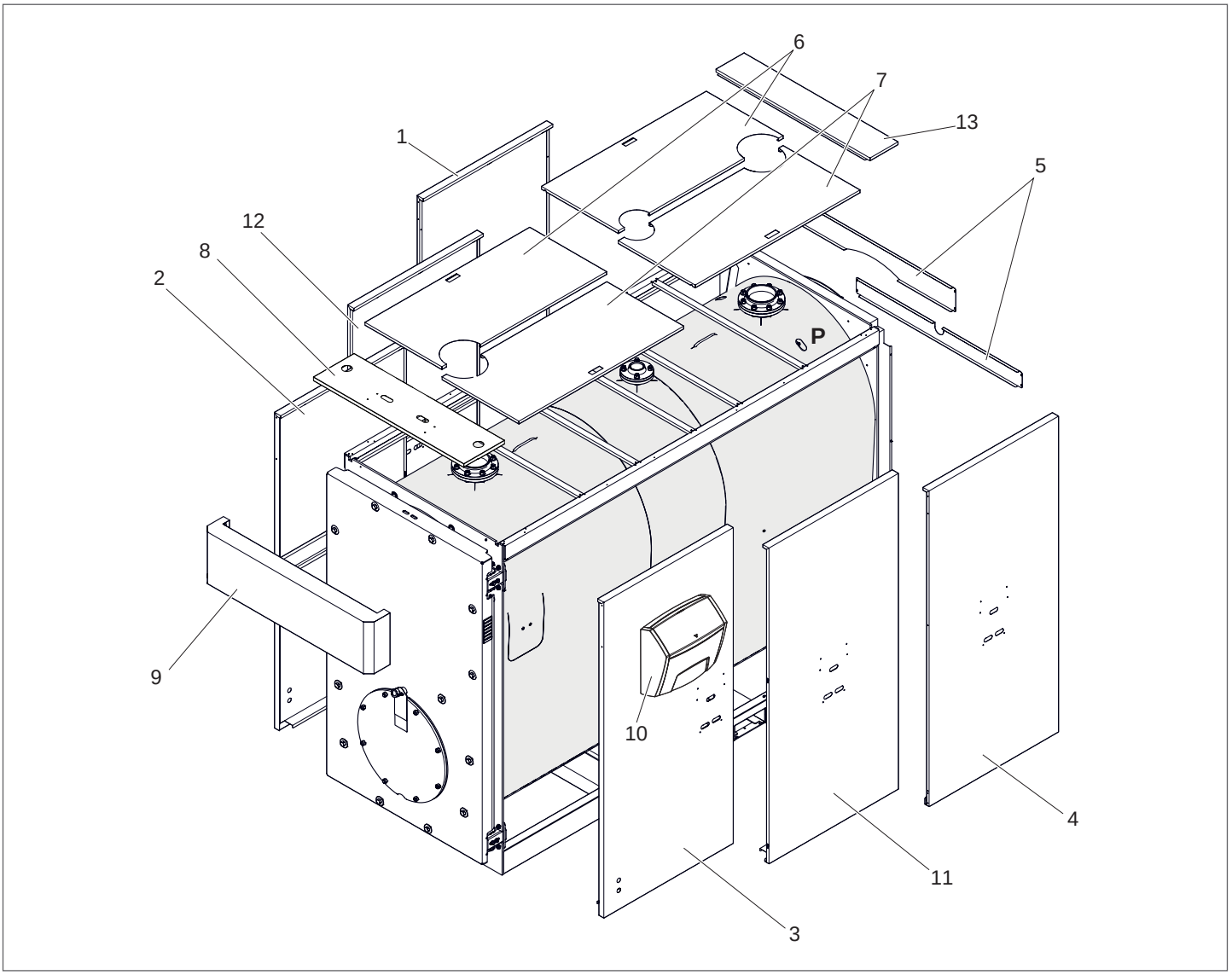

3.14.4 Applying nameplate label

Once the panelling has been fitted, attach the follow adhesive labels:

1 **Data plate**: this lists the technical specifications and performance of the product. It comes inside the documentation envelope.

It is inside the documentation envelope and MUST BE APPLIED at the end of the installation by the appliance installer in a clearly visible position as shown in the figure.
If the labels are lost, please request new ones from the **RIELLO** Technical Assistance Service.

1

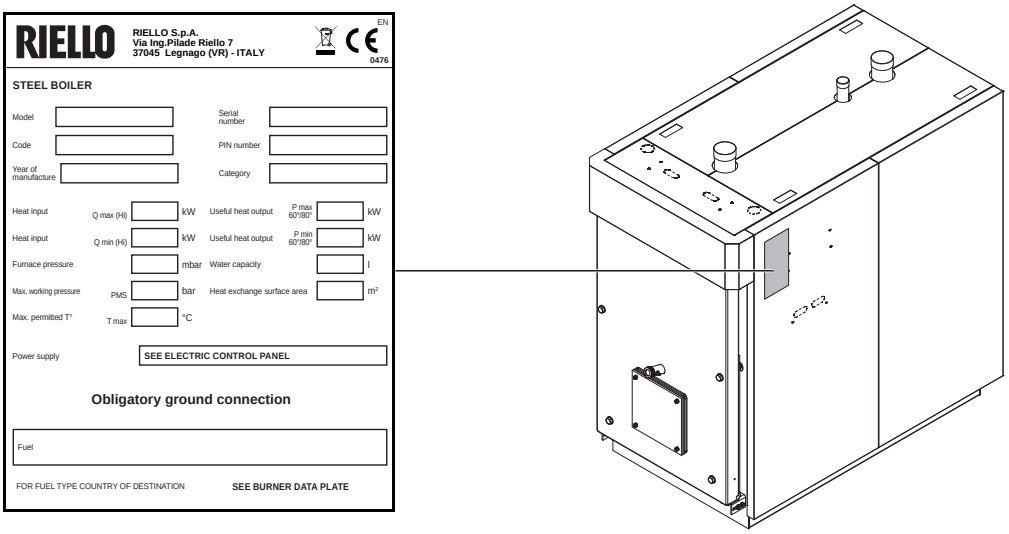

4 TECHNICAL ASSISTANCE SERVICE

4.1 Preparing for initial startup

It is essential to perform the following checks before starting up or testing the functioning of your **RIELLO RTS 2S** boiler. In particular, check that:

- the protective cardboard sheet (1) has been removed from the ceramic fibre;

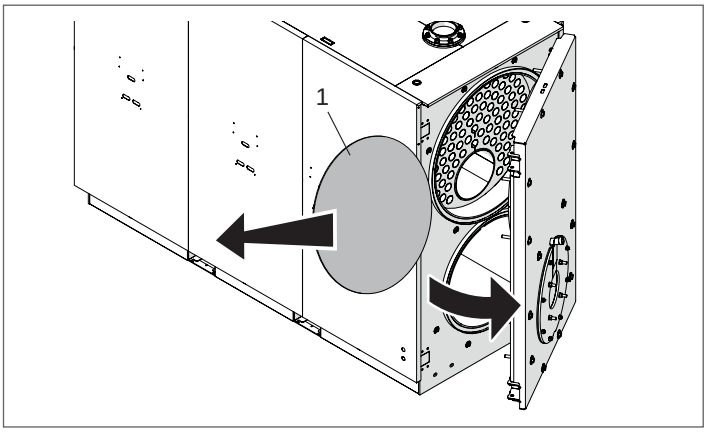

- the turbulators (2) are correctly positioned (vertical position) inside the heat exchanger tubes and the clips (3) are resting against the wall (4) of the heat exchanger;

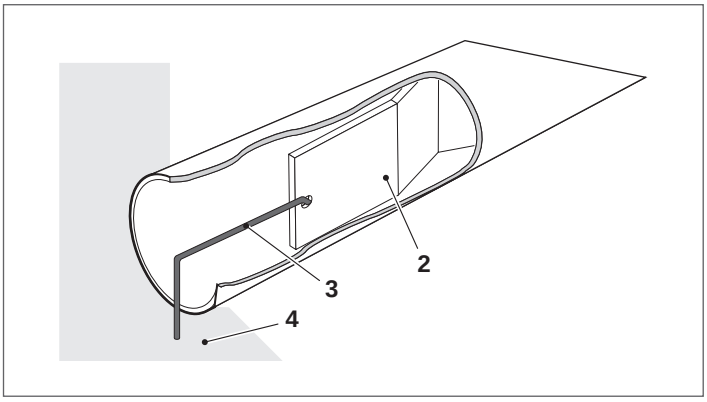

- The water and gas cocks are open

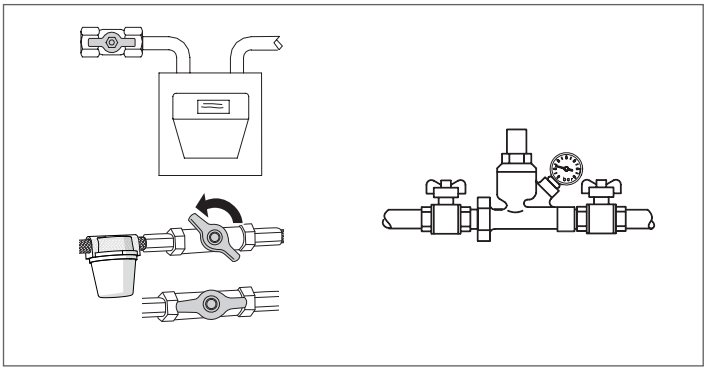

- there is an adequate fuel supply;

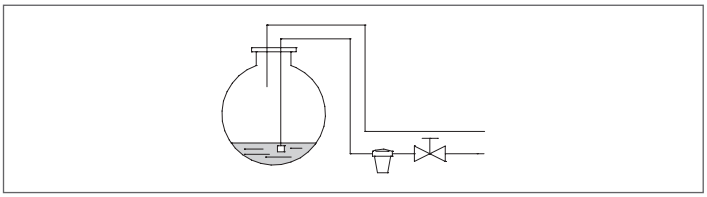

- The expansion vessel is properly charged

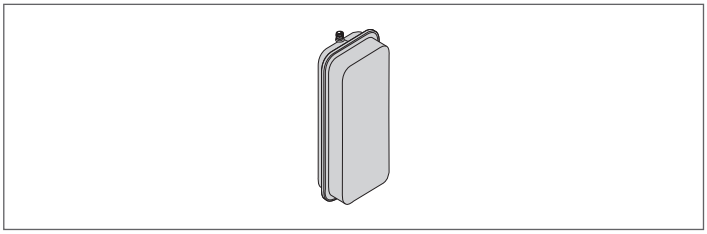

- The working pressure in the heating circuit is **over 1 bar** but below the maximum limit specified for the boiler
- The water circuits have been properly bled

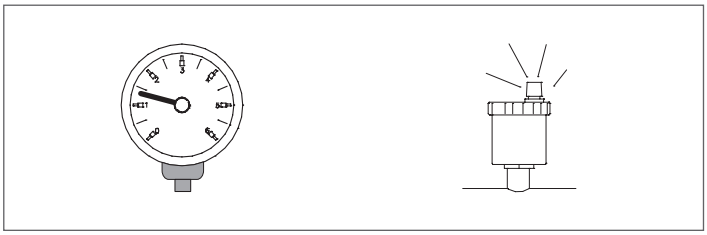

- The mains power connections to the boiler and its accessories (burner, pump, control panel, thermostats, etc.) have been properly made.

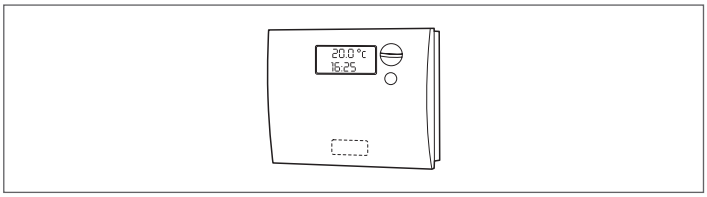

⚠ The phase-neutral polarity has been respected.

⚠ A ground (earth) connection is obligatory.

4.2 Initial startup

Once you have completed all the preparatory steps, proceed as follows to start up the boiler for the first time:

- turn the system's main power switch ON;
- if the system is equipped with a temperature controller or timer thermostat, make sure that it is switched on;

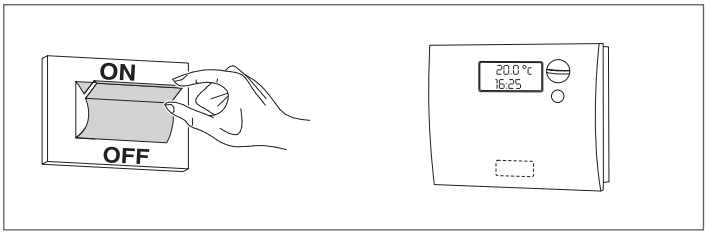

- Turn the control panel power switch ON and make sure that the green power indicator lights;

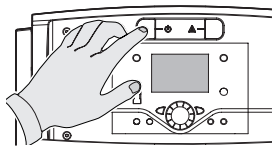

RIELLOtech CLIMA COMFORT
RIELLOtech CLIMA MIX

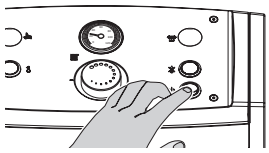

RIELLOtech PRIME
RIELLOtech PRIME ACS

- make the necessary settings as instructed in the instruction manual for your control panel;

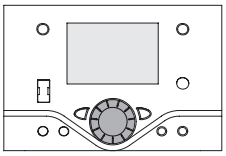

RIELLOtech CLIMA COMFORT
RIELLOtech CLIMA MIX

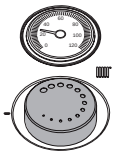

RIELLOtech PRIME
RIELLOtech PRIME ACS

- adjust the timer thermostat/s or temperature controller to the desired temperature (~20°C).

The burner should now ignite and remain in operation until the set temperature is reached.

Subsequent starts and stops will be made automatically according to the desired temperature without the need for further intervention.

If any ignition faults or malfunctions occur, the burner performs a "LOCKOUT SHUTDOWN". This is shown by the red button light on the burner and by the warning light on the control panel.

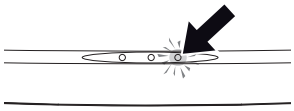

RIELLOtech CLIMA COMFORT
RIELLOtech CLIMA MIX

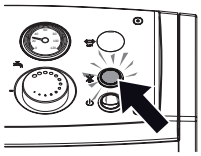

RIELLOtech PRIME
RIELLOtech PRIME ACS

⚠ If a "LOCKOUT SHUTDOWN" occurs, wait about 30 seconds before resetting the burner.

To reset the burner, press the red button light on the burner and wait until the flame ignites.
This operation can be repeated 2 or 3 times at the most. If the problem still persists after that, check:

- all checks listed in the burner's own instruction manual;
- all steps listed in the 'Preparing for Initial Start-up' section;
- all the electrical connections shown on the control panel wiring diagrams.

If the problem persists, check that the safety thermostat has not tripped.

⚠ If the safety thermostat trips, the boiler shuts down and a warning is displayed on the control panel (if present).
Proceed as follows to reset the safety thermostat:

- Wait until boiler temperature falls below 80°C;
- Remove the safety thermostat cover;
- Press the manual reset button;
- Wait for the complete ignition cycle to be repeated and for the flame to ignite.

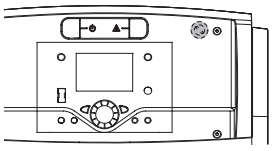

RIELLOtech CLIMA COMFORT
RIELLOtech CLIMA MIX

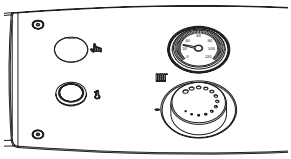

RIELLOtech PRIME
RIELLOtech PRIME ACS

4.3 Checks during and after initial start-up

Once the boiler has started up, make sure that it shuts down and re-starts properly when the following actions are taken:

- Set the boiler thermostat to the required setting (making sure that the temperature control is in manual mode)

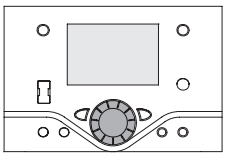

RIELLOtech CLIMA COMFORT
RIELLOtech CLIMA MIX

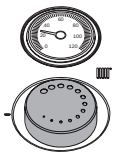

RIELLOtech PRIME
RIELLOtech PRIME ACS

- The control panel is switched OFF
- Set the room thermostat or timer to the required temperature.

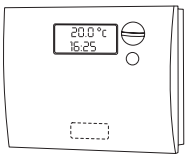

Check that there are no leaks from around the door seal. If there is any leakage of combustion gases, adjust the door as instructed on page 44.

Make sure that all the pumps in the system are free and rotate in the right direction.

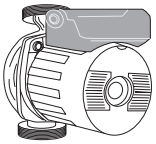

Turn off the main power switch to the boiler and make sure that the boiler shuts down properly.

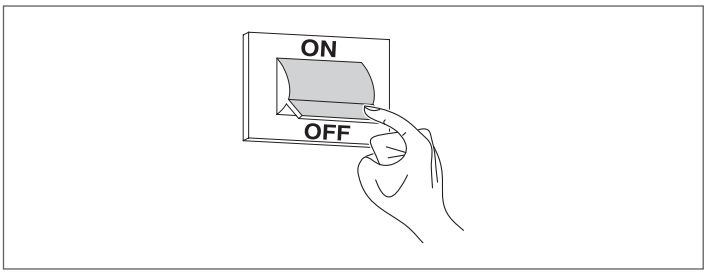

Provided all the above conditions are satisfied, start the boiler up again, then analyse the combustion fumes, measure fuel flow and re-check the door seal.

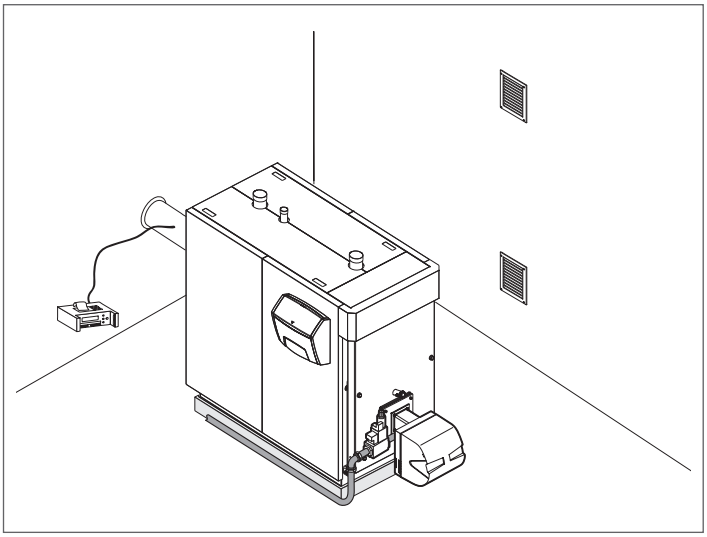

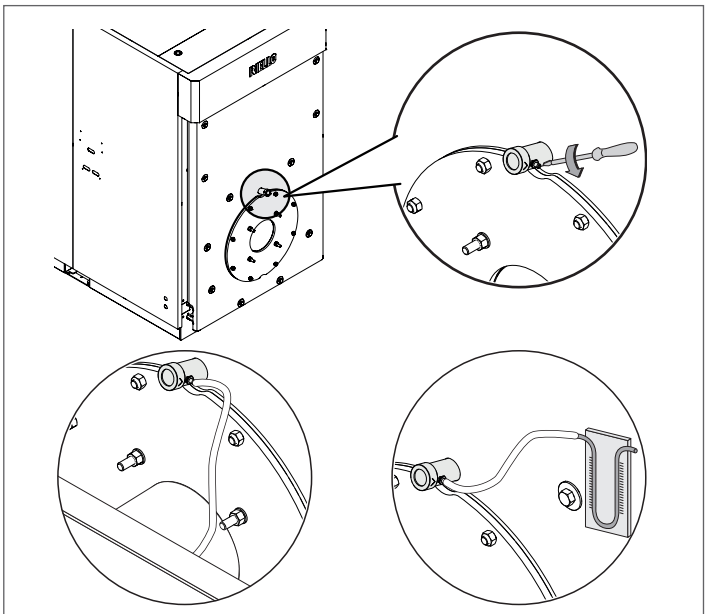

Flame inspection window cooling **Pressure measurement point**

⚠ A rubber socket is attached to the flame inspection window. If this is used as a pressure measurement point, leave the screw in place in order to close off the pressure measurement line during normal boiler functioning. If the rubber socket is used to cool the flame inspection window, remove the screw to ensure an adequate air flow.

Provided all the above conditions are satisfied, start the boiler up again, then analyse the combustion fumes, measure fuel flow and re-check the door seal.

4.4 Maintenance

Regular maintenance is a legal requirement. It is also essential for the safety, efficiency and durability of the boiler. Proper maintenance keeps consumption and emissions down, and ensures that the boiler continues to operate reliably over time.
Have your boiler serviced either by **RIELLO**'s Technical Assistance Service or by a qualified heating engineer.
Analyse the combustion fumes before commencing any maintenance. The results of fume analysis can give a clear idea of what servicing or repairs are needed.

- Turn the system's main power switch OFF
- Close all the gas cocks.

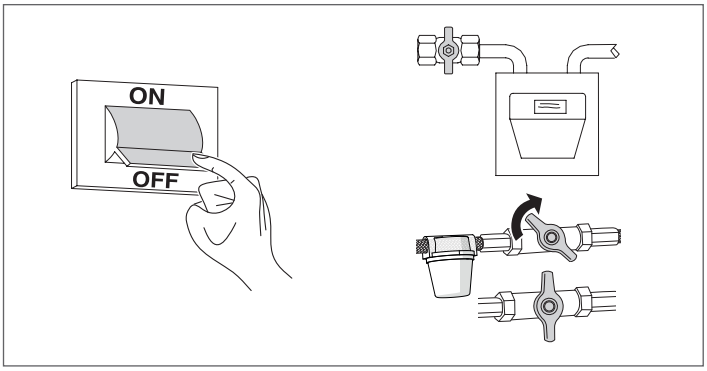

4.5 Door opening

4.5.1 System A - RTS 115 ÷ 410 2S

- Check that the upper (2) and lower (3) side safety screws and the pin screws are properly tightened;
- Unscrew the main locking screws (1) completely. These are self-supporting on the structure, and open the door.

4.5.2 System B - RTS 526 ÷ 2200 2S

- Unscrew the main locking screws (1) completely. These are self-supporting on the structure, and open the door.

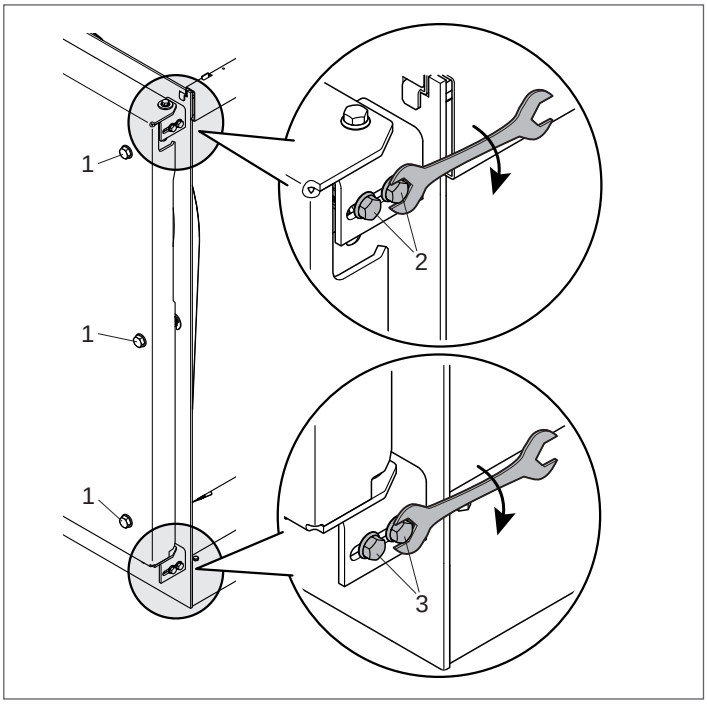

⚠ When opening for the first time, remove the pin "A" assembly (bushing (4), screw (5), washer (6)) positioned on the opposite side to the door rotation axis.

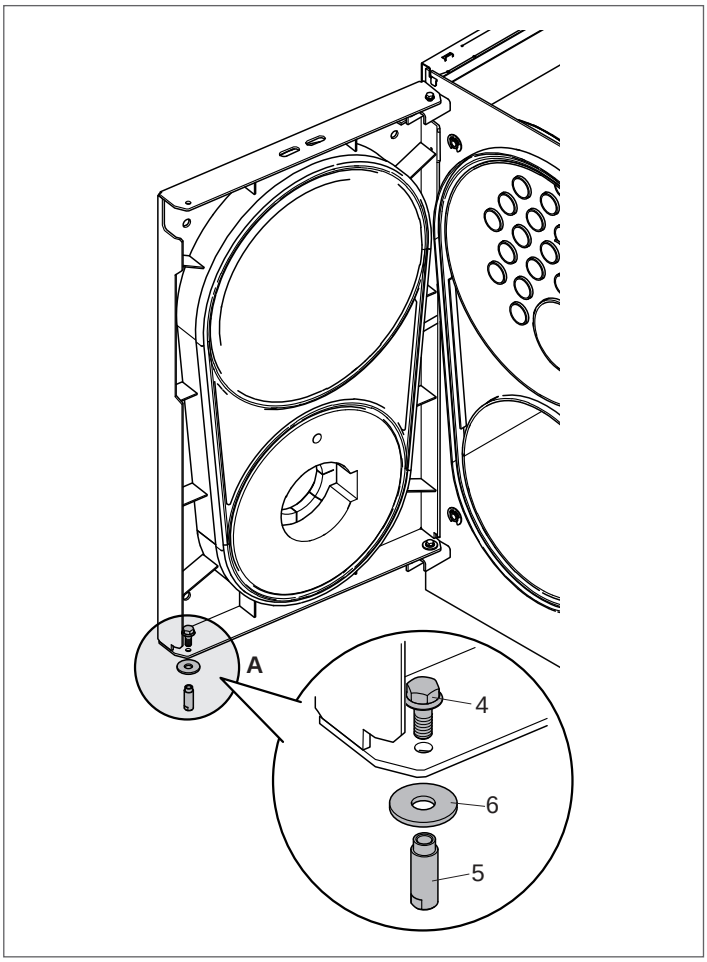

⚠ Make sure that the door is properly adjusted after every maintenance operation.

4.6 Adjusting the door

⚠ Make sure that the door is properly adjusted after every maintenance operation.

⚠ Make sure that there are no leaks around the boiler door seal. If you detect any leakage of fumes, increase the tightening of the door fixing bolts.

⚠ Make sure that the door is properly adjusted after every maintenance operation.

Make quite sure that the door presses uniformly all around the double seal to prevent dangerous fumes escaping into the air from the pressurized furnace. Proceed as follows to adjust the door seals:

4.6.1 System A - RTS 115 ÷ 410 2S

- Fit the door and tighten the main fixing bolts (1) until the seals start to compress;
- Loosen the safety screws (2) and (3) and fully tighten the main locking screws (1) of the door;
- Tighten the safety screws (2) and (3).

4.6.2 System B - RTS 526 ÷ 1850 2S

- Fit the door and tighten the main fixing bolts (1) until the seals start to compress.

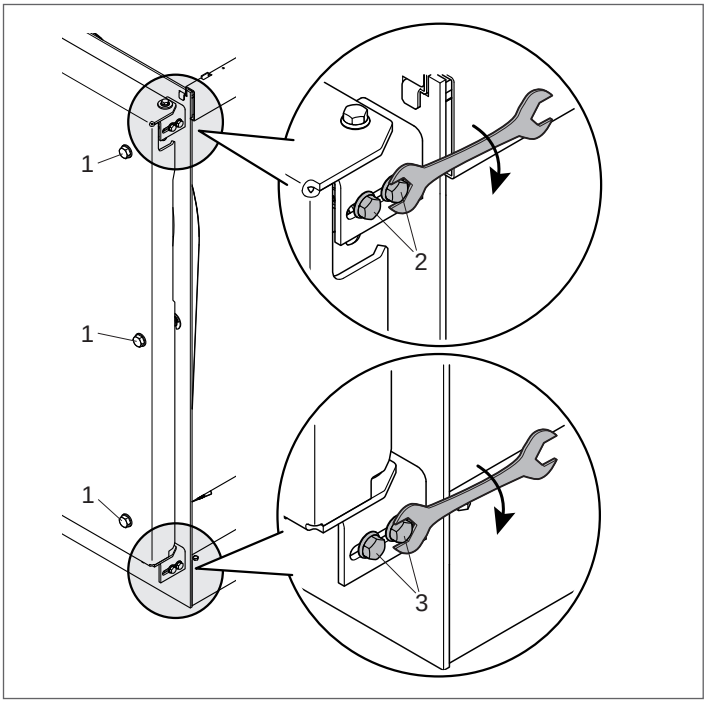

4.6.3 System C - RTS 2200 2S

- Loosen the nut (4) of the lower hinge and adjust the vertical alignment of the door opening/closing movement by acting on the screw (5);
- When finished, screw the nut on completely (4);
- Check the correct opening/closing of the door.

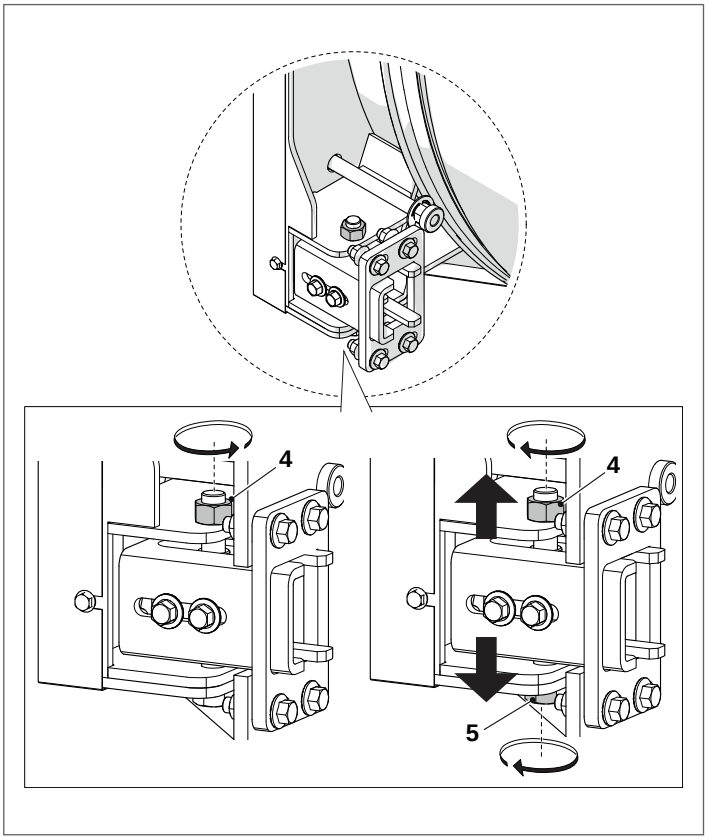

4.7 Cleaning the boiler

DANGER: Risk of death due to electric shock!
- Prior to opening the unit: disconnect the power supply and block it to prevent accidental reactivation.

WARNING: Damage to the system!
- Do not use abrasive cleaners or powder detergents.

WARNING: The combustion chamber and flues must be cleaned periodically – at least once a year – by a qualified technician.

Clean the boiler and remove any carbon deposits from the surfaces of the heat exchanger **at least once a year**. This not only extends the boiler's working life, but also keeps it efficient in terms of heat output and consumption.

Proceed as follows to clean the boiler:
- open the front door (1) and remove the turbulators (2);

If you need to replace any turbulators, make sure that the replacements have the characteristics listed in the table below.

- Clean the inner surfaces of the combustion chamber and flue gas path using a brush (3) or other suitable tools;
- remove deposits accumulated in the flue gas box through the opening released by the inspection door.

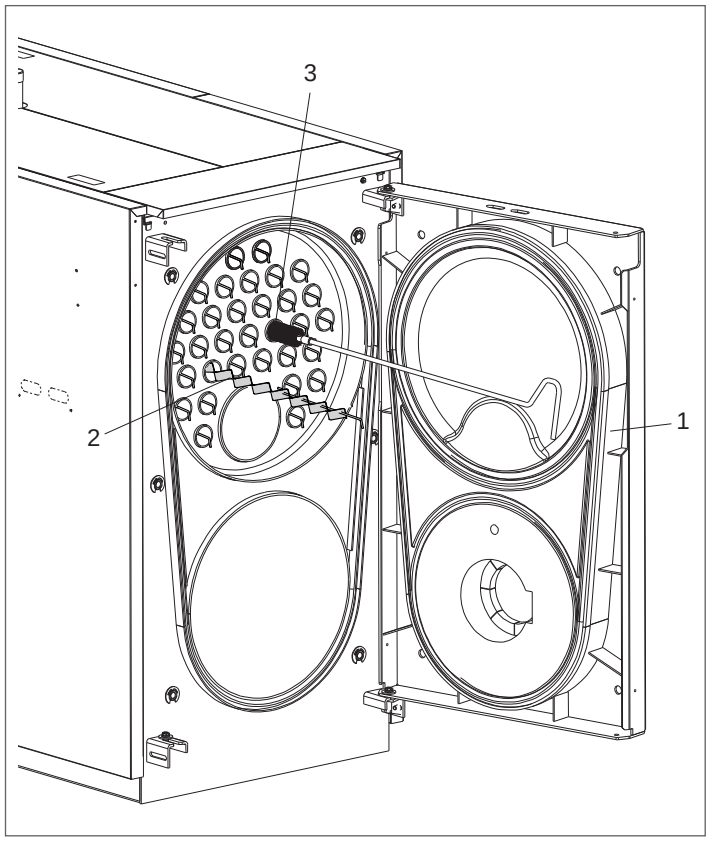

Every 300 hours of operation, the use of light oil burners with a smoke value greater than 3 involves:
- clean the boiler's heat exchange surfaces;
- check and clean the turbulators. Replace if worn or damaged.

	CALDAIA RTS 2S						
	115	150	200	247	319	410	526
N° turbulators	22	22	27	32	38	40	55

	CALDAIA RTS 2S							
	736	850	1012	1200	1355	1500	1850	2200
N° turbulators	61	61	71	71	71	71	90	98

Boiler inspection – water-side
RTS 1850 – 2200 2S
Carrying out the inspection is important in order to check the condition of thermal exchange surfaces and the presence of sludge or lime scale.
The boiler's front door and the flue gas box can be opened completely to facilitate the inspection, maintenance and cleaning of internal parts and to speed up servicing in general.

All the operations indicated MUST be carried out with:
- The appliance cold;
- The appliance electrically disconnected;
- Suitable personal protection equipment;
- The water and fuel shut-off valves closed.

In order to inspect the upper part of the boiler, partially empty the boiler before opening inspection openings.

The inspection openings are as follows:

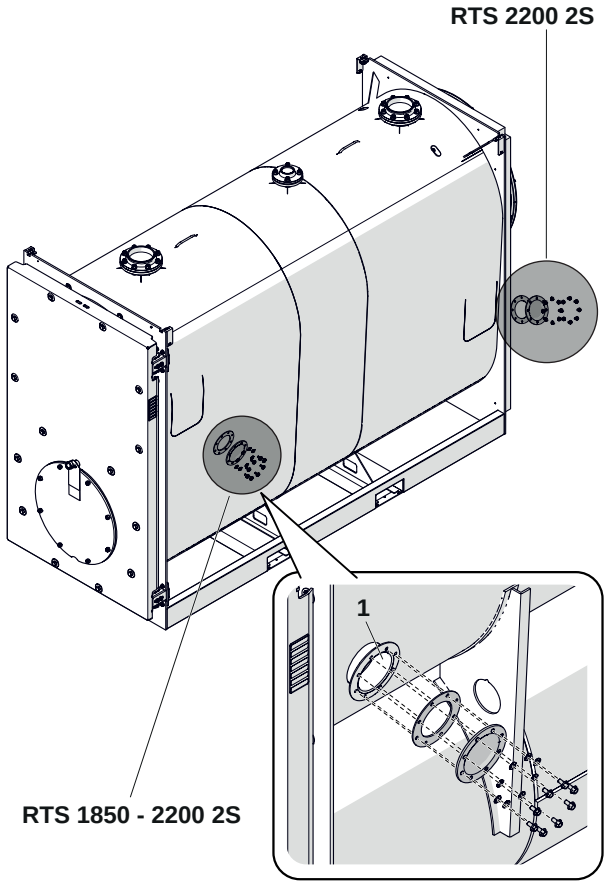

1 Inspection

Check the state of wear of the gaskets and replace them if necessary.
Once the maintenance operations are complete, refit the components working in the opposite direction of what was described.
Slowly charge the boiler to a minimum pressure value of 1 bar.

⚠ Check that the boiler drain cock is closed prior to filling.

On completion of cleaning, follow the above steps in the reverse order to refit all removed parts.

4.8 External cleaning

The external panels of the boiler and control panel must be cleaned using cloths moistened with soap and water.
To remove marks from the boiler casing, use a cloth damped in a 50% mix of water and denatured alcohol or a suitable cleaning product.
Carefully dry after cleaning.

⊖ Do not use abrasive products, petrol or triethylene.

4.9 Troubleshooting

FAULT	CAUSE	SOLUTION
The boiler becomes dirty very quickly	Burner badly adjusted	– Check the adjustment of the burner (perform flue gas analysis)
	Blockage in stack	– Clean the flue gas pipes and stack
	Burner air intake dirty	– Clean the burner air intake
The boiler does not reach its temperature setpoint	Boiler dirty	– Clean the flue gas pipes
	Boiler and burner mismatched	– Check specifications and settings
	Insufficient air/fuel flow to burner	– Check and adjust the burner
	Incorrect adjustment	– Check correct functioning – Check the temperature setting
The boiler keeps shutting down, and the control panel warning light comes on	Incorrect adjustment	– Check correct functioning – Check the temperature setting – Check the electrical wiring – Check the sensors
	No water supply	– Check the circuit pressure
	Air in the circuit	– Check the circuit pressure – Check the vent valve
The generator is at temperature but the heating system is cold	Air in the circuit	– Bleed the circuit
	Pump malfunctioning	– Check/unseize the pump
	Problem with minimum temperature thermostat (if present)	– Check the temperature setting
	Problem with minimum temp. thermostat (if present)	– Check the efficiency of the expansion vessel
The generator does not switch on (no fault light signal)	Intervention of the transfer pump auxiliary control safety thermostat	– Check the complete deaeration of the compartmentalised zones of the hydraulic circuit – Check correct functioning – Check operation of the transfer pump activation thermostat or bit thermostat – Check the auxiliary control safety thermostat
There is a smell of fumes	Fumes escaping into the air	– Clean the boiler body – Clean the flue gas pipes – Check that the boiler, flue gas pipes and stack are all properly sealed – Check the door seal
There is a smell of gas	Gas supply circuit	– Check the seals, possible blockages and fuel quality
The safety valve keeps opening	Circuit pressure too high	– Check the circuit pressure – Check pressure reducer functioning – Check pressure reducer setting
	Problem with heating system expansion vessel	– Check the efficiency of the expansion vessel

RIELLO

RIELLO S.p.A.
Via Ing. Pilade Riello, 7
37045 – Legnago (VR)
www.riello.com

The manufacturer strives to continuously improve all products. Appearance, dimensions, technical specifications, standard equipment and accessories are therefore liable to modification without notice.