cod. 20155241 rev. 6 09/2020



RTQ

EN INSTALLATION, OPERATION, MAINTENANCE AND SYSTEM MANAGEMENT MANUAL

RIELLO

RANGE

MODEL	BODY CODE
RTQ 920	20057409
RTQ 1020	20057334
RTQ 1250	20085134
RTQ 1500	20096131
RTQ 1510	20085135
RTQ 1700	20011305
RTQ 2020	20081518
RTQ 2320	20080725
RTQ 2620	20058348
RTQ 2920	20053760
RTQ 3200	20073429
RTQ 3500	20071589
RTQ 4000	20066629
RTQ 4500	20065129
RTQ 5000	20070611

ACCESSORIES
For a complete list of accessories and details of their compatibility, refer to the Catalogue.

Dear Customer,
Thank you for choosing a **RIELLO** boiler. You have purchased a modern, high efficiency, quality product that is designed to give dependable and safe service and to provide comfort in the home for many years to come. Arrange for your boiler to be serviced regularly by an authorised Technical Assistance Service **RIELLO**. Their personnel are specially trained to keep your boiler efficient and cheap to run. They also stock any original spare parts that might be required.
This instruction manual contains important instructions and precautions that must be observed to ensure the efficient functioning of your **RTQ** boiler.

Please accept our renewed thanks for your purchase
Riello S.p.A.

CONFORMITY

RIELLO RTQ boilers conform to:
- Low Voltage Directive 2014/35/EU
- Ecodesign Directive 2009/125/CE for energy-related products
- When used in conjunction with a CE-marked forced draught gas burner, they also satisfy the requirements of Regulation (EU) 2016/426

CE



At the end of its life, the product should be not be disposed of as solid urban waste, but rather it should be handed over to a differentiated waste collection centre.

CONTENTS

1 GENERAL INFORMATION 4
1.1 General Safety Information 4
1.2 Precautions. 4
1.3 Description of the appliance 4
1.4 Control panels. 5
1.5 Recommended burners 6
1.6 Identification 11
1.7 Technical specifications. 11

2 INSTALLATION 13
2.1 Unpacking the product 13
2.2 Overall dimensions and weights 14
2.3 Handling. 15
2.4 Place of installation 15
2.5 Installation in older systems and systems requiring modernisation 15
2.6 Water connections 16
2.7 Anti-condensate pump. 17
2.8 Discharge of combustion products 18
2.9 Door hinges 18
2.10 Changing the direction of door opening 19
2.11 Fitting the insulation and turbulators 21
2.12 Earth connection 23
2.13 Fitting the casing panels 24
2.14 Preparing for initial startup 27
2.15 Initial startup 27
2.16 Checks during and after initial start-up 28
2.17 Maintenance. 29
2.18 Cleaning the boiler 30
2.19 Troubleshooting 31

3 USE. 32
3.1 Putting into service 32
3.2 Temporary shutdown 33
3.3 Preparing for extended periods of disuse 33
3.4 Cleaning 33
3.5 Maintenance. 34
3.6 Useful information 35

The following symbols are used in this manual:

⚠ **CAUTION! =** Identifies actions that require caution and adequate preparation.

⛔ **STOP! =** Identifies actions that you MUST NOT do.

This manual, Code 20155241 - Rev. 6 (09/2020) comprises 36 pages.

1 GENERAL INFORMATION

1.1 General Safety Information

⚠ The boiler is delivered in separate crates. Check that it is complete, undamaged and as ordered as soon as you receive it. Report any discrepancies or damage to the dealer who sold it.

⚠ This product must be installed by a legally qualified heating engineer. On completion of the installation, the installer must issue the owner with a declaration of conformity confirming that the installation has been completed to the highest standards in compliance with the instructions provided by **RIELLO** in this instruction manual, and that it conforms to all applicable laws and standards.

⚠ This product must only be used for the purpose for which it is designed and made, as specified by **RIELLO**. **RIELLO** declines all responsibility, contractual or other, for damage to property or injury to persons or animals caused by improper installation, adjustment, maintenance or use.

⚠ If you notice any water leaking from the boiler, disconnect it immediately from the mains electricity supply, shut off the water supply, and notify your local **RIELLO**'s Technical Assistance Service or a qualified heating engineer immediately.

⚠ Periodically check that operating pressure in the water circuit is over 1 bar but below the maximum limit specified for the boiler. If this is not the case, contact Technical Assistance Service **RIELLO** or a professionally qualified heating engineer.

⚠ If the boiler is not going to be used for an extended period of time, contact **RIELLO**'s Technical Assistance Service or a qualified heating engineer to have it prepared for shutdown as follows
- Switch the boiler OFF at the control panel
- Turn the main system switch "off"
- Close the fuel cock and heating circuit water cock
- Drain the central heating circuit if there is any risk of freezing.

⚠ The boiler must be serviced at least once a year.

⚠ This instruction manual is an integral part of the boiler. It must be kept safe and must ALWAYS accompany the boiler, even if it is sold to another owner or transferred to another user or to another installation. If you damage or lose this manual, order a replacement immediately from your local **RIELLO**'s Technical Assistance Service.

1.2 Precautions

The operation of any appliance that uses fuel, electrical power and water demands that a number of fundamental safety precautions be respected:

⊖ It is forbidden to use electrical devices or equipment, such as switches, appliances, etc. if there is a smell of gas or unburnt products. If so:
- Ventilate the room, opening doors and windows
- Close the fuel shut-off cock
- Report the fault immediately to the **RIELLO**'s Technical Assistance Service or a professionally qualified heating engineer.

⊖ Do not touch the boiler while barefoot or wet.

⊖ Never clean or service the boiler without first disconnecting it from the mains electricity supply by turning the main power switch and the control panel switch OFF.

⊖ Do not tamper with or adjust the safety or control devices without prior authorisation and instructions from the manufacturer.

⊖ Do not plug or block the condensate drain outlet.

⊖ Never pull, disconnect, or twist the electrical cables coming from the appliance even if it is disconnected from the mains electricity supply.

⊖ Do not obstruct or restrict the vents in the room where the boiler is installed. Adequate ventilation is essential for correct combustion.

⊖ Do not expose the boiler to the elements. It is designed to work indoors.

⊖ Do not switch the boiler off if outdoor temperature drops below ZERO (risk of freezing).

⊖ Do not store containers of flammable substances in the room where the boiler is installed.

⊖ Do not allow children or persons with reduced physical, sensorial or mental abilities or with insufficient experience and knowledge to operate this system without proper supervision from the person responsible for its safe use.

⊖ Do not dispose of packaging material into the environment, or leave it within the reach of children, since it can become a potential hazard. Dispose of packaging material in compliance with applicable legislation.

1.3 Description of the appliance

RIELLO RTQ steel boilers are high efficiency boilers with horizontal, flame reversal combustion chambers and concentrically arranged flue gas pipes. They are designed for central heating and, when used in conjunction with a suitable storage cylinder, for domestic hot water production too.
Because they operate at low pressure, they provide a gradual heating action without thermal shock.

The most important technical features of these boilers are:
- The combustion chamber and heat exchange system are specially designed and shaped to achieve the best possible volume ratio;
- Only top quality materials are used to ensure a long working life.

Stainless steel turbulators inside the flue gas pipes establish an ideal pressure inside the combustion chamber and an ideal flue gas temperature. Evenly distributed thermal load optimises the efficiency of the boiler-burner system.
The boiler body is thoroughly insulated with a layer of high density glass wool.
The boiler's front door and the flue gas box can be opened completely to facilitate the inspection, maintenance and cleaning of internal parts and to speed up servicing in general.
The front door can open in either direction, even without removing the burner.

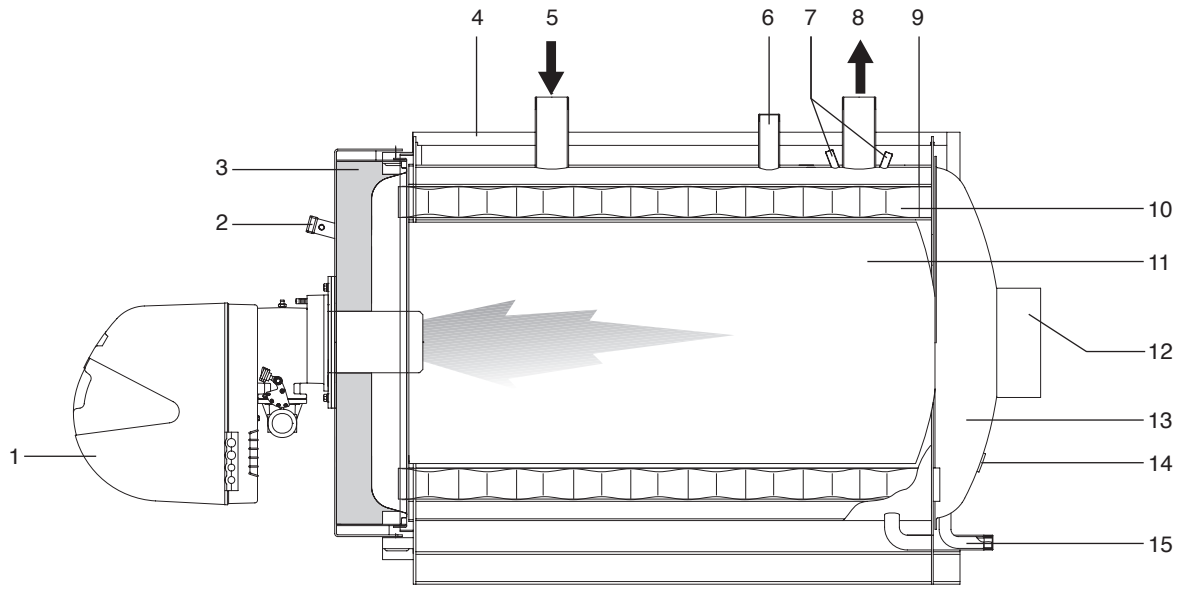

1 Burner
2 Flame inspection window with pressure measurement / cooling valve
3 Door
4 Casing
5 Central heating return
6 Safety device fitting
7 Instrument bulb/sensor sockets
8 Central heating flow
9 Flue gas pipes
10 Turbulators
11 Combustion chamber
12 Flue gas exhaust
13 Flue gas box
14 Inspection window
15 Condensate outlet

1.4 Control panels

The **RIELLO** control panels that can be used with **RIELLO RTQ** steel boilers are listed below. These control panels cater for all the needs of the heating system and of all the devices installed in it.

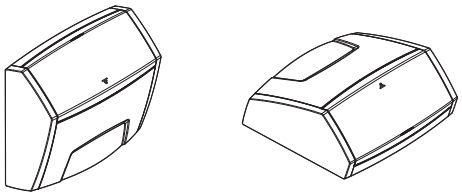

TECH CLIMA TOP for central heating (1 direct zone and 2 mixed zones) and domestic hot water production with a single stage, two stage, or modulating burner. Also for controlling solar heating system and cascaded boiler systems.

TECH PRIME for central heating only (1 direct zone) with a single or two stage burner.

TECH CLIMA COMFORT for central heating (1 direct zone and 1 mixed zone) and domestic hot water production with a single stage burner. Also for controlling solar heating system and cascaded boiler systems.

TECH PRIME ACS for central heating (1 direct zone) and domestic hot water production with a single or two stage burner.

When a TECH CLIMA TOP or CLIMA COMFORT control panel is installed, the boiler return (cold) line must be equipped with a temperature sensor socket. See the Catalogue for the necessary accessory part numbers.

1.5 Recommended burners

The burners recommended to obtain the best possible performance from **RIELLO RTQ** boilers are:

BURNERS	RTQ								Burner plate	Flame inversion kit
MODEL	920	1020	1250	1500	1510	1700	2020	2320		
GAS										
RS 100 t.l.	x								Accessory	
RS 100 t.l.		x							Accessory	
RS 130 t.l.			x						Accessory	
RS 150 t.l.				x	x				Accessory	
RS 190 t.l.						x			Accessory	
RS 190 t.l.							x		Accessory	
RS 130 M t.l.			x						Accessory	
RS 100/M t.l.	x								Accessory	
RS 100/M t.l.		x							Accessory	
RS 100/E MZ t.l.	x								Accessory	
RS 100/E MZ t.l.		x							Accessory	
RS 130/M t.l.			x						Accessory	
RS 130/E M t.l.			x						Accessory	
RS 150/M t.l.				x	x				Accessory	
RS 190/M t.l.						x			Accessory	
RS 190/M t.l.							x		Accessory	
RS 190/E t.l.				x	x	x			Accessory	
RS 190/E t.l.							x		Accessory	
RS 250/M MZ t.l.							x	x	Accessory	
RS 250/E MZ t.l.							x	x	Accessory	
RS 250/EV MZ t.l.							x	x	Accessory	
MIXED OIL/GAS										
RLS 100 t.l.	x								Accessory	
RLS 100 t.l.		x							Accessory	
RLS 120/M MX t.l.	x								Accessory	Accessory
RLS 160/M MX t.l.		x	x						Accessory	Accessory
RLS 160/M MX t.l.				x					Accessory	Accessory
RLS 190/M MZ t.l.			x						Accessory	
RLS 190/M MZ t.l.				x	x	x			Accessory	
RLS 250/M MZ t.l.							x		Accessory	
RLS 310/M MX (*)								x	Accessory	
RLS 310/M MX (**)								x	Accessory	

(*) Direct start-up
(**) Star/delta start-up: The burners with star/delta start-up provide a lower current consumption than models with direct start-up.

⚠ Please see the manufacturer's catalogue for the burner code definition and the accessories required.

⚠ Burner/boiler combinations have been calculated on the basis of the burner working at 3% 02.

⚠ See the instruction manual provided with the burner for further information on, burner installation, electrical connections, burner adjustments.

⚠ Long heads and burner plates are required for the correct installation and coupling of the burners.

⚠ To assemble/disassemble the burners equipped with recirculation tube, it might be necessary to remove the latter before carrying out such operations (strictly comply with the use and maintenance manual of the burner).

⚠ If a two stage burner is installed, 1st stage heat input must not be less than 70% of total heat input. With liquid fuel burners equipped with 2 nozzles, it is therefore important to choose the correct first stage nozzle.

⚠ In Italy, the Decree of the President of the Council of Ministers of the 2nd October 1995 requires that heating systems with heating power of less than 3 MW use fuel oil with a sulphur content of less than 0.3 % by weight.

BURNERS	RTQ								Burner plate	Flame inversion kit
MODEL	920	1020	1250	1500	1510	1700	2020	2320		
OIL										
RL 100 t.l.	x								Accessory	
RL 100 t.l.		x							Accessory	
RL 100/M t.l.	x								Accessory	Accessory
RL 100/M t.l.		x							Accessory	Accessory
RL 130 t.l.			x						Accessory	
RL 130/M t.l.			x						Accessory	Accessory
RL 190 t.l.				x	x	x			Accessory	
RL 190 t.l.							x		Accessory	
RL 190/M t.l.				x	x	x			Accessory	Accessory
RL 190/M t.l.							x		Accessory	Accessory
RL 250 MZ t.l.								x	Accessory	
PRESS 300 T/G t.c.								x	Accessory	
PRESS 300 P/G t.c.								x	Accessory	
NAPHTHA										
PRESS 100/N ECO t.l.	x								Accessory	
PRESS 100/N ECO t.l.		x							Accessory	
PRESS 140 T/N ECO t.l.			x						Accessory	
PRESS 140 P/N ECO t.l.			x						Accessory	
PRESS 140 T/N ECO t.l.				x	x				Accessory	
PRESS 140 P/N ECO t.l.				x	x				Accessory	
PRESS 200 T/N ECO t.l.						x			Accessory	
PRESS 200 P/N ECO t.l.						x			Accessory	
PRESS 200 T/N ECO t.l.							x	x	Accessory	
PRESS 200 P/N ECO t.l.							x	x	Accessory	
MIXED NAPHTHA/GAS										
ENNE/EMME 1400 t.l.		x	x						Accessory	
ENNE/EMME 2000 t.l.				x	x	x			Accessory	
ENNE/EMME 3000 t.c.							x	x	Accessory	

⚠ Please see the manufacturer's catalogue for the burner code definition and the accessories required.

⚠ Burner/boiler combinations have been calculated on the basis of the burner working at 3% 02.

⚠ See the instruction manual provided with the burner for further information on, burner installation, electrical connections, burner adjustments.

⚠ Long heads and burner plates are required for the correct installation and coupling of the burners.

⚠ To assemble/disassemble the burners equipped with recirculation tube, it might be necessary to remove the latter before carrying out such operations (strictly comply with the use and maintenance manual of the burner).

⚠ If a two stage burner is installed, 1st stage heat input must not be less than 70% of total heat input. With liquid fuel burners equipped with 2 nozzles, it is therefore important to choose the correct first stage nozzle.

⚠ In Italy, the Decree of the President of the Council of Ministers of the 2nd October 1995 requires that heating systems with heating power of less than 3 MW use fuel oil with a sulphur content of less than 0.3 % by weight.

⚠ When running on naphtha, reduce the boiler's maximum rated heat output by 20%.

BURNERS	RTQ							Burner plate
MODEL	2620	2920	3200	3500	4000	4500	5000	
GAS								
RS 300/M	x	x						Accessory
RS 300/E	x	x						Accessory
RS 300/EV	x	x						Accessory
RS 400/M				x				Accessory
RS 400/E				x				Accessory
RS 400/EV				x				Accessory
RS 500/M					x			Accessory
RS 500/E					x			Accessory
RS 500/EV					x			Accessory
RS 650/M						x		Accessory
RS 650/E						x		Accessory
RS 650/EV						x		Accessory
RS 800/M							x	Accessory
RS 800/E							x	Accessory
RS 800/EV							x	Accessory
GAS 9 P/M t.c.	x							Accessory
GAS 9 P/M t.l.		x						Accessory
GAS 10 P/M t.c.			x	x				Accessory
GAS 10 P/M t.l.			x	x				Accessory
MIXED OIL/GAS								
RLS 310/M MX (*)	x	x						Accessory
RLS 310/M MX (**)	x	x						Accessory
RLS 410/M MX (*)				x				Accessory
RLS 410/M MX (**)				x				Accessory
RLS 300/BP	x	x						Accessory
RLS 300/E	x	x						Accessory
RLS 300/EV	x	x						Accessory
RLS 650/M					x	x		Accessory
RLS 650/E					x	x		Accessory
RLS 650/EV					x	x		Accessory
RLS 800/M							x	Accessory
RLS 800/E							x	Accessory
RLS 800/EV							x	Accessory

(*) Direct start-up
(**) Star/delta start-up: The burners with star/delta start-up provide a lower current consumption than models with direct start-up.

⚠ Please see the manufacturer's catalogue for the burner code definition and the accessories required.

⚠ Burner/boiler combinations have been calculated on the basis of the burner working at 3% 02.

⚠ See the instruction manual provided with the burner for further information on, burner installation, electrical connections, burner adjustments.

⚠ Long heads and burner plates are required for the correct installation and coupling of the burners.

⚠ To assemble/disassemble the burners equipped with recirculation tube, it might be necessary to remove the latter before carrying out such operations (strictly comply with the use and maintenance manual of the burner).

⚠ If a two stage burner is installed, 1st stage heat input must not be less than 70% of total heat input. With liquid fuel burners equipped with 2 nozzles, it is therefore important to choose the correct first stage nozzle.

⚠ In Italy, the Decree of the President of the Council of Ministers of the 2nd October 1995 requires that heating systems with heating power of less than 3 MW use fuel oil with a sulphur content of less than 0.3 % by weight.

BURNERS	RTQ							Burner plate
MODEL	2620	2920	3200	3500	4000	4500	5000	
OIL								
RL 300/B MZ	x							Accessory
RL 400/B MZ		x	x					Accessory
PRESS 300 T/G t.c.	x	x						Accessory
PRESS 300 P/G t.c.	x	x						Accessory
PRESS 450 T/G t.c.			x	x				Accessory
PRESS 450 P/G t.c.			x	x				Accessory
PRESS 450 T/G t.c.					x			Accessory
PRESS 450 P/G t.c.					x			Accessory
RL 300/E	x							Accessory
RL 300/EV	x							Accessory
RL 400/M				x				Accessory
RL 400/E		x						Accessory
RL 400/EV		x	x	x				Accessory
RL 650/M					x	x		Accessory
RL 650/E					x	x		Accessory
RL 650/EV					x	x		Accessory
RL 800/M							x	Accessory
RL 800/E							x	Accessory
RL 800/EV							x	Accessory
NAPHTHA								
PRESS 300 T/N ECO t.c.	x	x	x					Accessory
PRESS 300 P/N ECO t.c.	x	x	x					Accessory
PRESS 450 T/N ECO t.c.					x	x	x	Accessory
PRESS 450 P/N ECO t.c.					x	x	x	Accessory
MIXED NAPHTHA/GAS								
ENNE/EMME 3000 t.c.	x	x						Accessory
ENNE/EMME 4500 t.c.				x				Accessory

⚠ Please see the manufacturer's catalogue for the burner code definition and the accessories required.

⚠ Burner/boiler combinations have been calculated on the basis of the burner working at 3% 02.

⚠ See the instruction manual provided with the burner for further information on, burner installation, electrical connections, burner adjustments.

⚠ Long heads and burner plates are required for the correct installation and coupling of the burners.

⚠ To assemble/disassemble the burners equipped with recirculation tube, it might be necessary to remove the latter before carrying out such operations (strictly comply with the use and maintenance manual of the burner).

⚠ If a two stage burner is installed, 1st stage heat input must not be less than 70% of total heat input. With liquid fuel burners equipped with 2 nozzles, it is therefore important to choose the correct first stage nozzle.

⚠ In Italy, the Decree of the President of the Council of Ministers of the 2nd October 1995 requires that heating systems with heating power of less than 3 MW use fuel oil with a sulphur content of less than 0.3 % by weight.

⚠ When running on naphtha, reduce the boiler's maximum rated heat output by 20%.

IMPORTANT NOTES FOR BURNER INSTALLATION

Before fixing the burner to the boiler, make sure that:
- The door opens the right way (see the relevant sections for details on how to reverse the door)
- The length (L) of the burner fixing bolts is less than (S), i.e. the total depth of the seal, plates and washer. **Longer bolts can cause the door to warp, compromising its ability to seal the boiler hermetically and permitting the release of combustion fumes.**

To ensure correct burner installation, also refer to the burner's own manual.

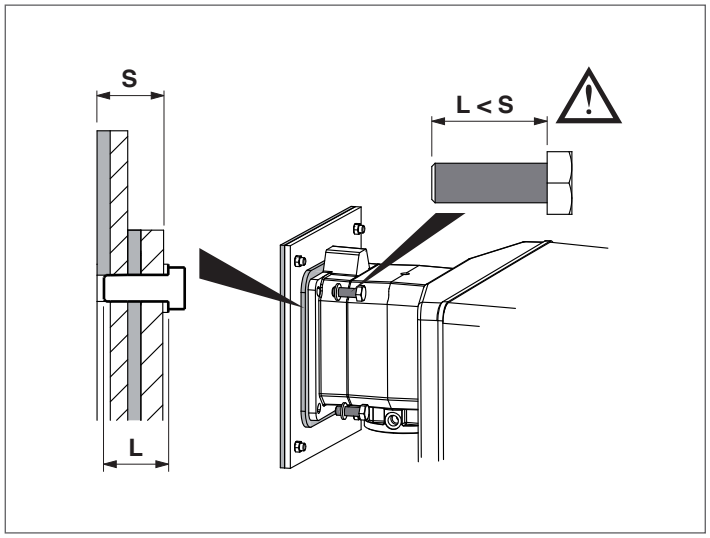

If you are installing a new boiler but re-using an old burner, always perform the following checks:
- Make sure that the performance of the old burner is adequate for the requirements of the boiler
- Make sure that the length and diameter of the burner nozzle are as specified in the following table.

⚠ When you finish installing the burner in the boiler, fill the gap between the burner's blast tube and the refractory material in the door with the ceramic insulation (A) supplied with the boiler.

⚠ Blast tubes must not exceed the specified lengths by more than 20%.

BURNER PLATE

RIELLO RTQ boilers are equipped with burner plates with no holes. These plates accept the recommended burners. The burner plates must be drilled on installation according to the burner fixing holes.

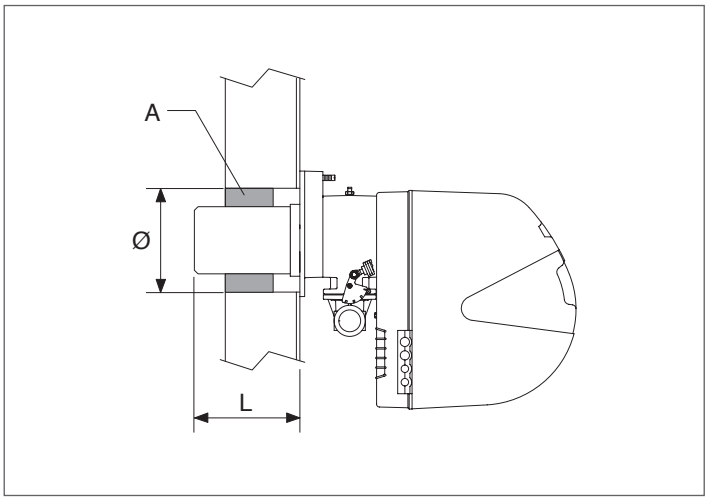

	RTQ							
	920	1020	1250	1500	1510	1700	2020	2320
Burner head L min. (mm)	275	280	325	340	340	365	375	350
Hole in door Ø (mm)	205	260	260	280	280	300	350	350

	RTQ						
	2620	2920	3200	3500	4000	4500	5000
Burner head L min. (mm)	350	350	350	350	405	405	405
Hole in door Ø (mm)	350	350	350	350	440	440	440

⛔ Do not re-use old burners if their blast tube lengths are below those specified in the table.

1.6 Identification

The products are identified by:

Serial number plate
This is located on the boiler body and specifies the serial number, model, and furnace power.

Data plate
This lists the technical specifications and performance of the product. It comes inside the documentation envelope. On completion of the installation you MUST apply it in a clearly visible position at the top of one of the side panels. If you damage or lose this label, order a replacement immediately from **RIELLO**'s Technical Assistance Service.

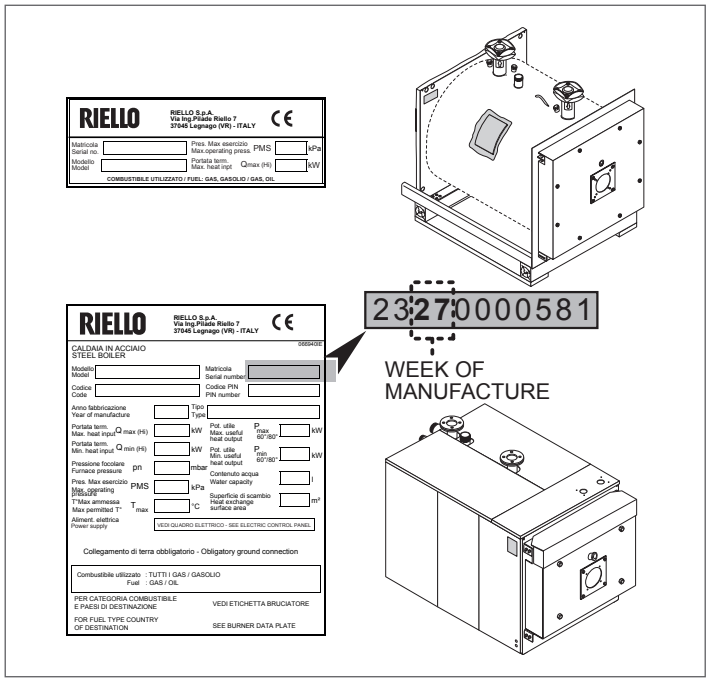

⚠ If these plates or any other means of clearly identifying the product are defaced, removed or lost, proper installation and servicing may be rendered difficult.

1.7 Technical specifications

DESCRIPTION		RTQ								
		920	1020	1250	1500	1510	1700	2020	2320	
Fuel		Gas / Oil								
Rated heat input	min	896	990	1096	1342	1342	1594	1800	2162	kW
	max	990	1100	1338	1606	1617	1820	2162	2485	kW
Rated useful heat output Pn	min	831	916	1021	1251	1251	1486	1678	2014	kW
	max	920	1020	1250	1500	1510	1700	2020	2320	kW
Useful efficiency at min. Pn	min	92,8	92,5	93,2	93,2	93,2	93,2	93,2	93,2	%
	max	92,9	92,7	93,4	93,4	93,4	93,4	93,4	93,4	%
Useful eff. at 30% max. Pn		93	92,9	93,3	93,3	93,3	93,3	93,3	93,3	%
Constant pressure drop		< 1								
Flue gas temperature (ΔT)		170÷180								°C
Flue gas mass flow rate		0,42	0,473	0,560	0,675	0,680	0,797	0,911	1,047	kg/sec
Furnace pressure		4,6	4,6	5,8	5,4	5,4	7,2	4,8	4,2	mbar
Furnace volume		649	757,5	1039,6	1244,6	1244,6	1479,7	1569,7	1838,1	dm^3
Tot. volume of flue gas side		989,5	1169,4	1554,0	1905,2	1905,2	2162,7	2474,5	2747,0	dm^3
Total surface area for heat exchange		24,42	28,9	34,65	41,03	41,03	42,24	47,34	55,94	m^2
Volumetric heat load		1525	1452	1288	1290	1299	1231	1378	1352	kW/m^3
Specific heat load		37,7	35,3	36,1	36,6	36,8	40,2	42,7	41,5	kW/m^2
Max. operating pressure		6								bar
Max. admissible temp.		115								°C
Max. operating temp.		110								°C
Min. admissible water return temp.		55								°C
Pressure drops	ΔT 10°C	175	164	70	250	250	310	110	125	mbar
	ΔT 20°C	38	45	19	65	65	105	27	30	mbar
Water capacity		657	841	1114	1295	1295	1480	1772	1575	liters

⚠ The stack must guarantee the minimum draught specified by applicable technical standards, assuming zero pressure at the connection to the flue gas exhaust.

⚠ Values obtained in combination with **RIELLO** burners of fuel with CO2 = 12.5% and gas with CO2 = 9.7% and λ = 1.2.

DESCRIPTION		RTQ							
		2620	2920	3200	3500	4000	4500	5000	
Fuel		Gas / Oil							
Rated heat input	min	2501	2850	3150	3150	3669	4316	4855	kW
	max	2830	3150	3450	3780	4315	4854	5394	kW
Rated useful heat output Pn	min	2311	2636	2915	3191	3401	4001	4501	kW
	max	2620	2920	3200	3500	4000	4500	5000	kW
Useful efficiency at min. Pn	min	92,4	92,5	92,5	92,5	92,7	92,7	92,7	%
	max	92,5	92,7	92,7	92,7	92,7	92,7	92,7	%
Useful eff. at 30% max. Pn		92,8	92,9	92,9	92,9	92,9	92,9	92,9	%
Constant pressure drop		< 0,5				< 1			
Flue gas temperature (ΔT)		170÷180				170÷185			°C
Flue gas mass flow rate		1,2	1,327	1,49	1,615	1,845	2,075	2,306	kg/sec
Furnace pressure		6	6,3	7,9	7,9	7,7	8	7,9	mbar
Furnace volume		2284,8	2729,8	2772,0	3256,9	3743,0	4235,0	4820,0	dm^3
Tot. volume of flue gas side		3260,7	3648,0	3880,0	4464,0	5140,0	5847,0	7335,0	dm^3
Total surface area for heat exchange		60,68	69,36	74,14	80,11	94,66	108,30	119,70	m^2
Volumetric heat load		1239	1154	1245	1100	1153	1146	1119	kW/m^3
Specific heat load		43,2	42,1	43,2	43,5	42,3	41,6	41,8	kW/m^2
Max. operating pressure		6							bar
Max. admissible temp.		115							°C
Max. operating temp.		110							°C
Min. admissible water return temp.		55							°C
Pressure drops	ΔT 10°C	220,0	270,0	250,0	330,0	240,0	280,0	350,0	mbar
	ΔT 20°C	60,0	70,0	65,0	70,0	55,0	65,0	95,0	mbar
Water capacity		2526	2700	2720	2750	3650	4075	4570	liters

⚠ The stack must guarantee the minimum draught specified by applicable technical standards, assuming zero pressure at the connection to the flue gas exhaust.

⚠ Values obtained in combination with **RIELLO** burners of fuel with CO2 = 12.5% and gas with CO2 = 9.7% and λ = 1.2.

2 INSTALLATION

2.1 Unpacking the product

RIELLO RTQ steel boilers come **in 2 separate crates**:

1 **BOILER BODY CRATE** to which is attached the documentation envelope (A) containing:
- Instruction manual;
- Data label (to be applied to the casing on completion of the installation);
- Certificate of Warranty and water test certificate;
- Bar code labels;

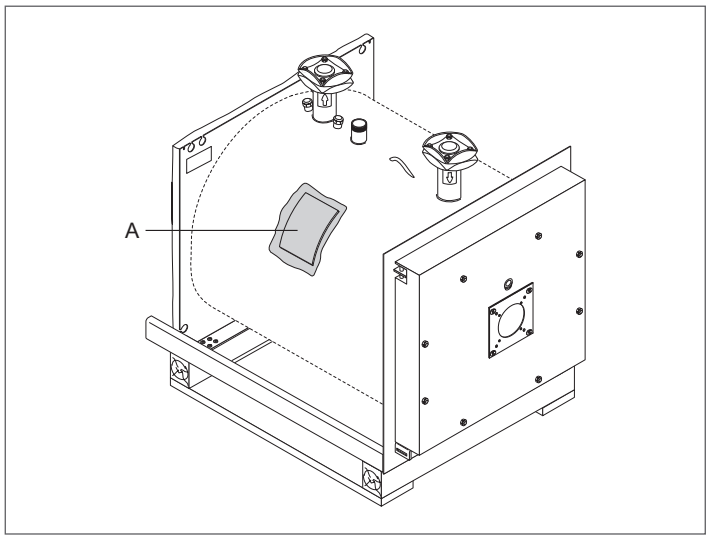

⚠ The following material, to be fitted by the installer, is located inside the combustion chamber:
- turbulators and turbulator fixing clips (for installation in the flue gas pipes);
- water connection flanges;
- boiler body insulation and fasteners.

For fitting instructions, see the section entitled "Fitting the insulation and turbulators" on page 21.

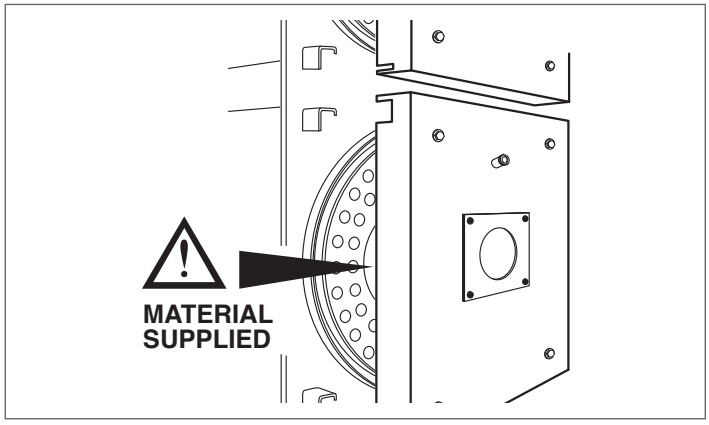

⚠ The instruction manual is an integral part of the appliance; therefore, it should be read and stored carefully.

2 **THE CASING PANELS** complete with assembly accessories (2 packs for models **RTQ** 920 ÷ 3500 and 3 packs for models **RTQ** 4000 ÷ 5000).

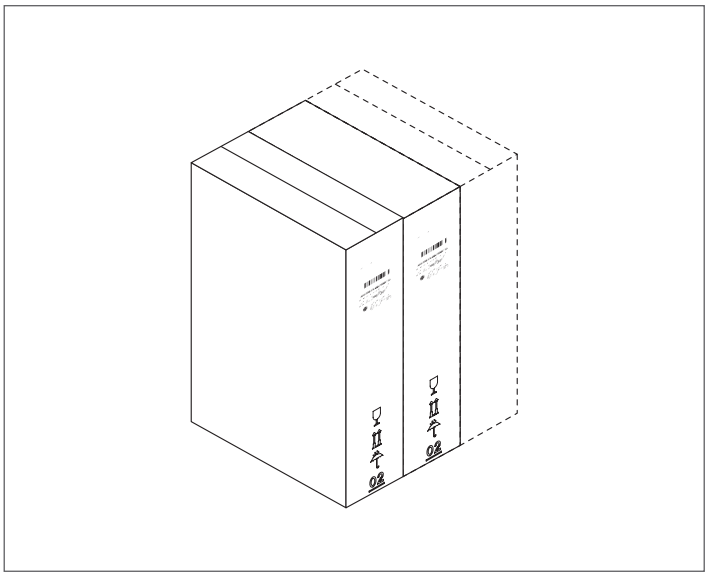

IMPORTANT
For the boiler to function correctly, it must be connected to a **RIELLO** TECH control panel and dedicated control accessories.

2.2 Overall dimensions and weights

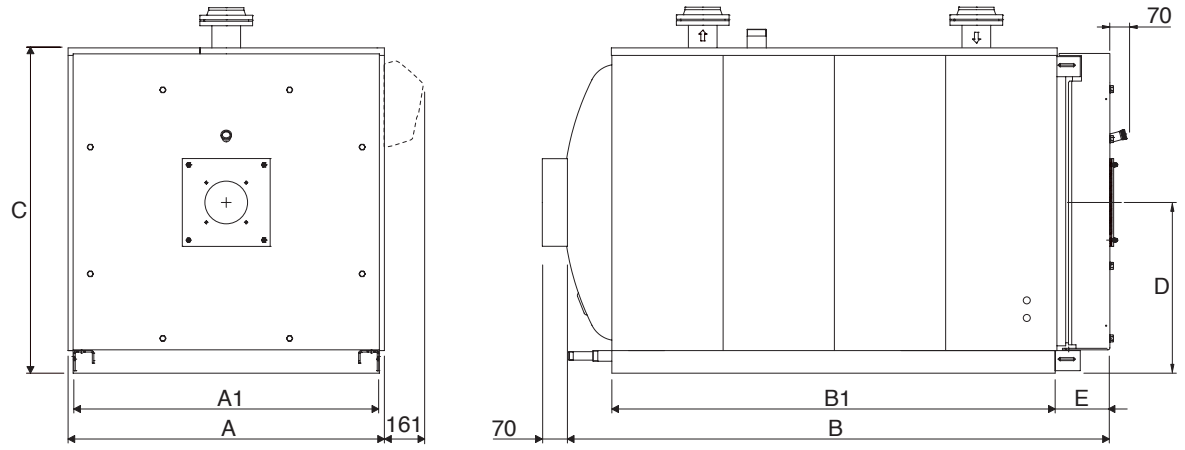

DESCRIPTION		RTQ								
		920	1020	1250	1500	1510	1700	2020	2320	
A	Width	1220	1285	1360	1450	1450	1535	1605	1655	mm
A1	Base width	1170	1235	1310	1400	1400	1485	1555	1605	mm
B	Depth	2310	2445	2765	2860	2895	3055	3045	3120	mm
B1	Base depth	1960	2110	2375	2470	2470	2580	2630	2740	mm
C	Height	1280	1335	1430	1530	1530	1610	1680	1750	mm
D	Burner height	690	715	755	820	820	865	900	925	mm
E	Door depth	205	215	245	250	250	290	290	263	mm
Weight of boiler		1182	1460	2170	2470	2470	2730	3105	3595	kg
Weight of casing		55	70	87	100	100	111	115	130	kg

DESCRIPTION		RTQ							
		2620	2920	3200	3500	4000	4500	5000	
A	Width	1800	1865	1865	1935	2040	2070	2230	mm
A1	Base width	1750	1815	1815	1885	1990	2020	2180	mm
B	Depth	3385	3490	3555	3570	3934	4184	4451	mm
B1	Base depth	2872	2940	3037	3040	3332	3560	3774	mm
C	Height	1925	1995	1996	2055	2140	2170	2355	mm
D	Burner height	1015	1050	1050	1080	1155	1170	1250	mm
E	Door depth	265	310	280	280	325	325	325	mm
Weight of boiler		4520	4676	4750	5190	6015	6600	7750	kg
Weight of casing		147	150	155	156	180	190	215	kg

2.3 Handling

RIELLO RTQ steel boilers are fitted with lifting attachments. Take great care when moving them and only use lifting equipment of adequate capacity.

Remove the fixing screws and remove the wooden pallet before positioning the boiler.

⚠ Wear suitable personal protective equipment and use suitable safety devices.

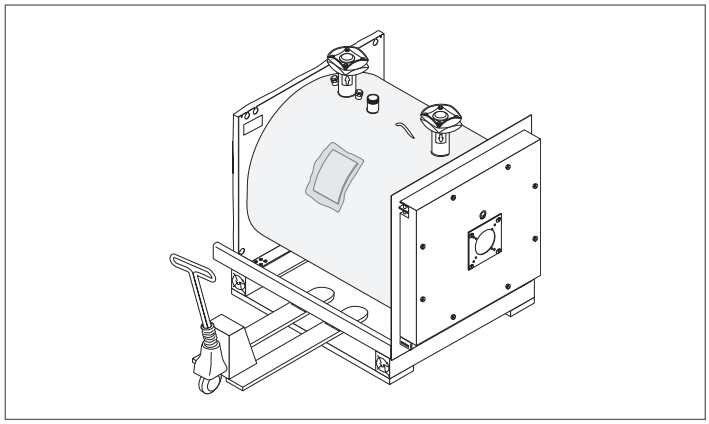

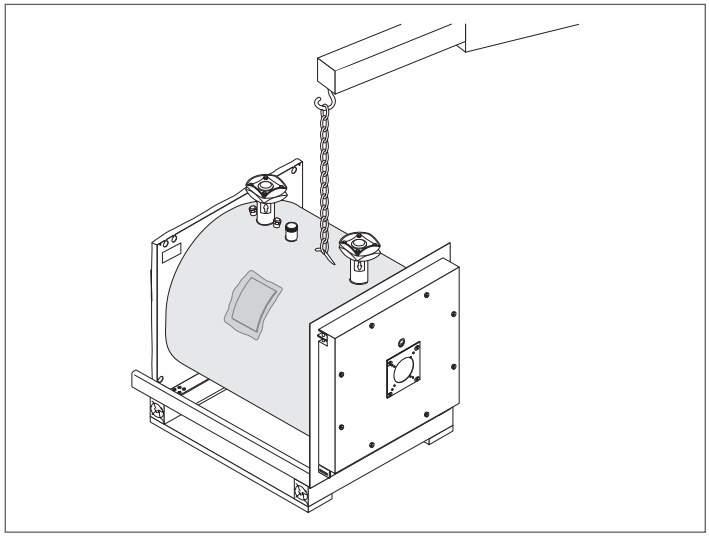

2.4 Place of installation

RIELLO RTQ steel boilers must be installed in a dedicated boiler room, with adequately sized vents, in compliance with applicable laws and standards.

If at all possible, the boiler should be installed on a raised base to prevent the burner fan sucking up dust.

⚠ When installing the boiler, allow sufficient space around it to access all safety and control devices and to permit easy maintenance.

⚠ If the specific weight of the gas supply to the burner is greater than the specific weight of air, install all electrical parts at least 500 mm above floor level.

⛔ Do not install the boiler outdoors. It is not designed to work outdoors and is not fitted with the necessary automatic anti-frost systems to do so.

2.5 Installation in older systems and systems requiring modernisation

When installing these boilers in old systems or systems requiring modernisation, always perform the following checks:

- make sure that the stack is able to withstand the temperature of the combustion gases and that it has been designed and made in compliance with applicable standards. The stack must also be as straight as possible, sealed, insulated and not blocked or choked;
- make sure that the electrical system has been installed by a qualified electrician in compliance with applicable standards;
- make sure that the oil feed line and any oil storage tank are made and installed in compliance with applicable standards;
- make sure that the expansion vessels are big enough to contain the volume generated by thermal expansion;
- make sure that flow rate, head and direction of flow of the pumps are suitable and correct;
- make sure that the circuit has been flushed out to remove all sludge and lime scale, and has been vented and seal tested.
- make sure that a suitable water treatment system is installed if the quality of the supply/recirculation water so demands.

2.6 Water connections

RIELLO RTQ boilers are designed and made for use in central heating installations, but can also be used for domestic hot water production if connected to a suitable storage cylinder. Water fittings are as specified in the following table.

⚠ Allow for the dimensions of the control panel that needs to be installed on top of the boiler.

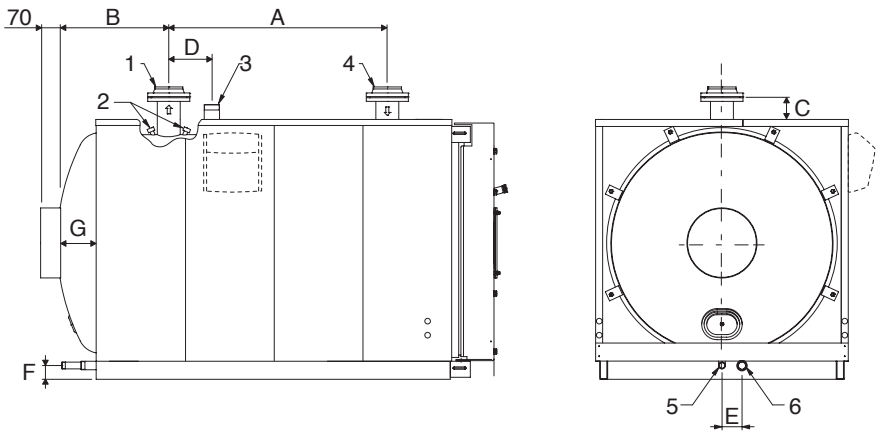

DESCRIPTION		RTQ								
		920	1020	1250	1500	1510	1700	2020	2320	
1	Central heating flow *	DN100	DN100	DN125	DN125	DN125	DN125	DN150	DN150	Ø
2	Instrument bulb / sensor socket	G1/2"	G1/2"	G1/2"	G1/2"	G1/2"	G1/2"	G1/2"	G1/2"	Ø
3	Safety device fitting	G1"1/2	G2"1/2	G2"1/2	G2"1/2	G2"1/2	DN 80	DN100	DN100	Ø
4	Central heating return *	DN100	DN100	DN125	DN125	DN125	DN125	DN150	DN150	Ø
5	Condensate drain	G1"	G1"	G1"	G1"	G1"	G1"	G1"	G1"1/4	Ø
6	Boiler drain	G1"1/4	G1"1/4	G1"1/4	G1"1/4	G1"1/4	G1"1/2	G1"1/2	G1"1/2	Ø
A		1250	1300	1540	1600	1600	1650	1650	1850	mm
B		505	580	580	655	655	700	645	548	mm
C		105	105	100	115	115	125	142	120	mm
D		300	250	550	650	650	380	280	480	mm
E		110	110	110	110	110	115	115	110	mm
F		95	95	90	115	115	120	118	105	mm
G		180	125	125	170	170	180	115	225	mm

DESCRIPTION		RTQ							
		2620	2920	3200	3500	4000	4500	5000	
1	Central heating flow *	DN150	DN175	DN175	DN175	DN200	DN200	DN200	Ø
2	Instrument bulb / sensor socket	G1/2"	G1/2"	G1/2"	G1/2"	G1/2"	G1/2"	G1/2"	Ø
3	Safety device fitting	DN100	DN100	DN100	DN100	DN125	DN125	DN125	Ø
4	Central heating return *	DN150	DN175	DN175	DN175	DN200	DN200	DN200	Ø
5	Condensate drain	G1"1/4	G1"1/4	G1"1/4	G1"1/4	G1"1/4	G1"1/4	G1"1/4	Ø
6	Boiler drain	G1"1/2	G1"1/2	G1"1/2	G1"1/2	G1"1/2	G1"1/2	G1"1/2	Ø
A		2050	2115	2215	2215	2410	2660	2850	mm
B		610	610	608	610	690	690	762	mm
C		100	95	95	107	100	100	100	mm
D		500	500	500	500	550	550	550	mm
E		129	129	130	137	150	150	155	mm
F		132	132	135	125	160	160	165	mm
G		245	250	250	250	280	280	350	mm

(*) All flanged connections are PN6 according to EN 1092-1.

Below is given the hydraulic diagram:

Central heating and domestic hot water production

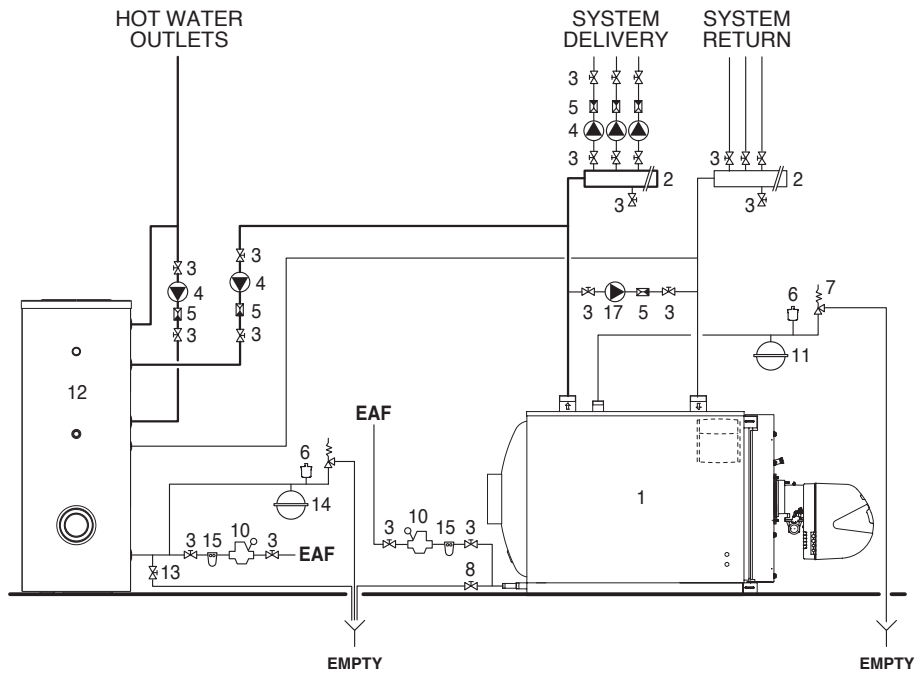

1 Boiler
2 Central heating system manifolds
3 Disconnect valves
4 System pumps
5 Non-return valves
6 Automatic vent valve
7 Boiler safety valve
8 Boiler drain cock
9 Storage cylinder safety valve
10 System filling cock
11 CH expansion vessel
12 RIELLO 7200 storage cylinder
13 Storage cylinder drain cock
14 DHW expansion vessel
15 Water softener filter
16 Pressure reducer
17 Anti-condensate pump
EAF Domestic cold water inlet

⚠ The selection and the installation of the components of the system is the responsibility of the installer, who must operate in accordance with good practice and current Legislation.

⚠ Circuits filled with anti-freeze must be fitted with water disconnectors.

⚠ If needed, water supplies and recovery circuits must be conditioned by suitable treatment systems. See the table alongside for reference values.

REFERENCE VALUES	
pH	6-8
Electrical conductivity	less than 200 µS/cm (25°C)
Chlorine ions	less than 50 ppm
Sulphuric acid ions	less than 50 ppm
Total iron	less than 0.3 ppm
Alkalinity M	less than 50 ppm
Total hardness	less than 35°F
Sulphur ions	none
Ammonia ions	none
Silicon ions	less than 30 ppm

2.7 Anti-condensate pump

An anti-condensate pump operates during periods of no heat request to avoid damage until the boiler returns to a stable operating temperature. While the system is operating, this pump must guarantee a flow rate between 20 and 30% maximum flow to ensure a water return temperature no lower than 55 °C. Pump shutdown must also be delayed for at least 3 minutes at the beginning of extended periods of boiler shutdown (overnight or weekend shutdown etc.).

⚠ A sensor socket must be positioned at a distance of 3 to 5 times the diameter of the water return pipe, upstream from the water fitting, to measure effective water return temperature and control the anti-condensate pump or the temperature controller stabilisation function.

⚠ Any temperature controllers installed remotely from the control panel must be compatible with the system's electrical connections and functioning logic.

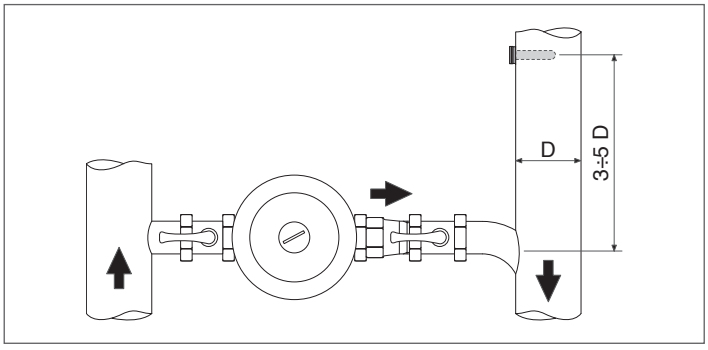

2.8 Discharge of combustion products

The flue gas exhaust and stack connection must be made in compliance with applicable laws and standards, using heat resistant, condensate resistant and stress resistant rigid pipe and sealed joints.

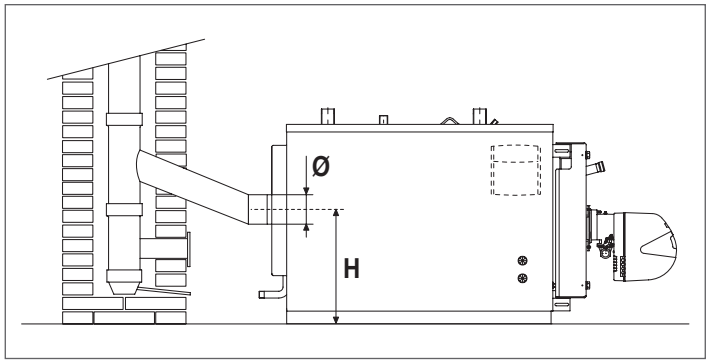

MODEL	RTQ							
	920	1020	1250	1500	1510	1700	2020	2320
Ø (mm)	300	350	400	400	400	450	450	450
H (mm)	690	715	755	820	820	865	900	925

MODEL	RTQ						
	2620	2920	3200	3500	4000	4500	5000
Ø (mm)	450	500	500	500	550	600	650
H (mm)	1015	1050	1050	1080	1155	1170	1250

⚠ The stack must guarantee the minimum draught specified by applicable technical standards, assuming zero pressure at the connection to the flue gas exhaust. Draught at the stack must not exceed 0.2 mbar. Fit a draught limiter if draught exceeds this value.

⚠ Inadequate or badly dimensioned stacks and exhausts can increase combustion noise, cause condensation problems and affect combustion parameters.

⚠ Uninsulated flues are potentially dangerous and can cause burns.

⚠ Joints must be sealed using materials capable of withstanding temperatures of at least 200°C (e.g. filler, mastic or silicone based sealant).

⚠ The connection between the horizontal section of flue and the vertical stack must be either straight or at an angle of no more than 45°.

⚠ If more than one boiler is installed in the same utility room, separate flues must be provided for each boiler. If this is not possible, the burners should definitely be equipped with automatic closing of the air damper.

2.9 Door hinges

Boilers are fitted with three door hinge points in the factory. The doors are initially fitted to open to the right. If you need to change the door to open to the left, make the necessary modifications before performing any tests that require the boiler door to be opened. Proceed as instructed below to change the direction of door opening.

⚠ Once you have decided on the direction of door opening and the door opens successfully, remove the unused hinge assembly B.

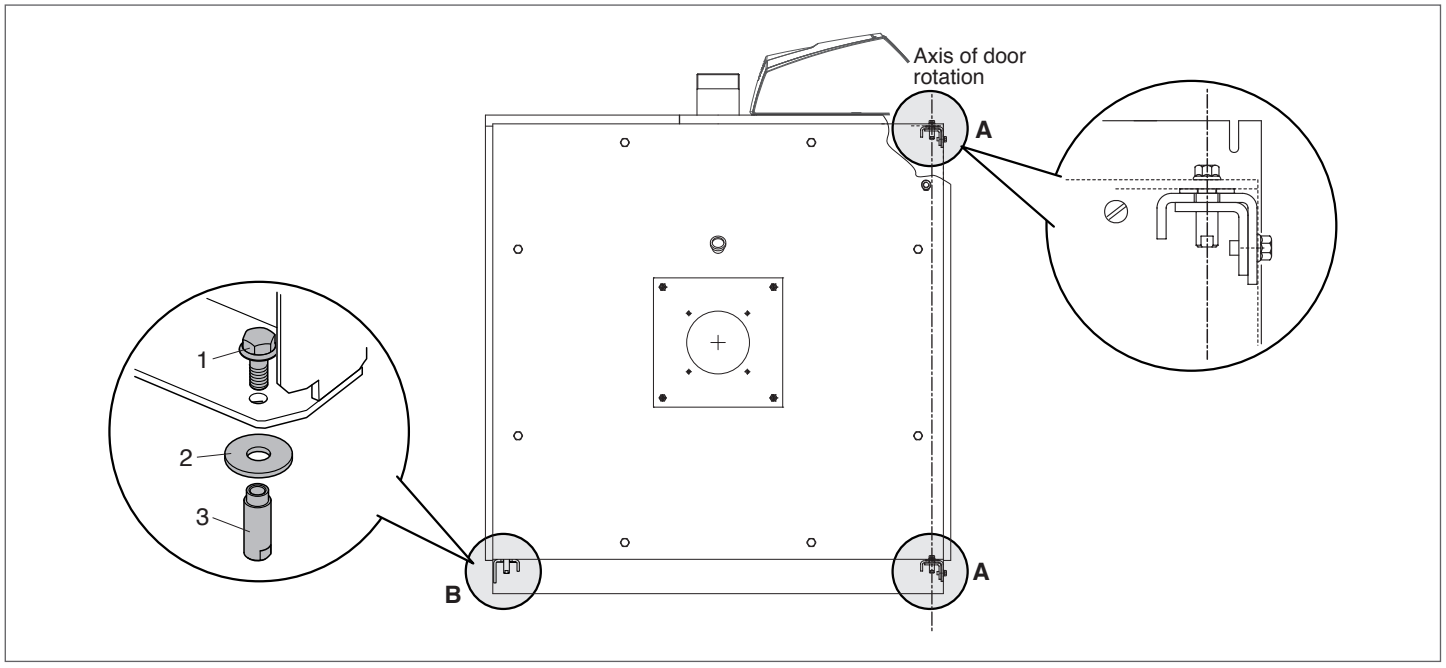

2.10 Changing the direction of door opening

⚠ Perform this operation before starting the boiler up for the first time and before opening the door.

⚠ If the door is not properly supported on its hinges, equipment capable of supporting its entire weight must be used to move it (see the table on page 14) and using suitable safety equipment.

If you wish to modify the door to open to the left, i.e. with the hinges on the left, proceed as follows:

⚠ Make sure that the main door fixing bolts (1) are securely tightened;
- remove the top safety bolts (2) and the door stop bracket (3);
- remove the bottom safety bolts (4) and the door stop bracket (5);

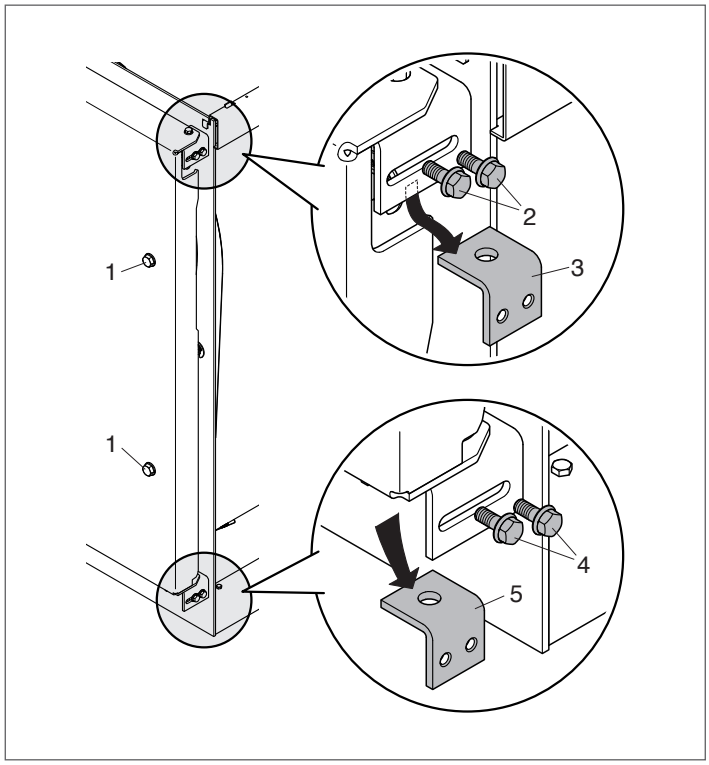

- insert a spanner through the slot in the side of the top door mounting bracket and hold the bushing (8) steady;
- unscrew the top bolt (6), then remove the bushing (8) and washer (7);

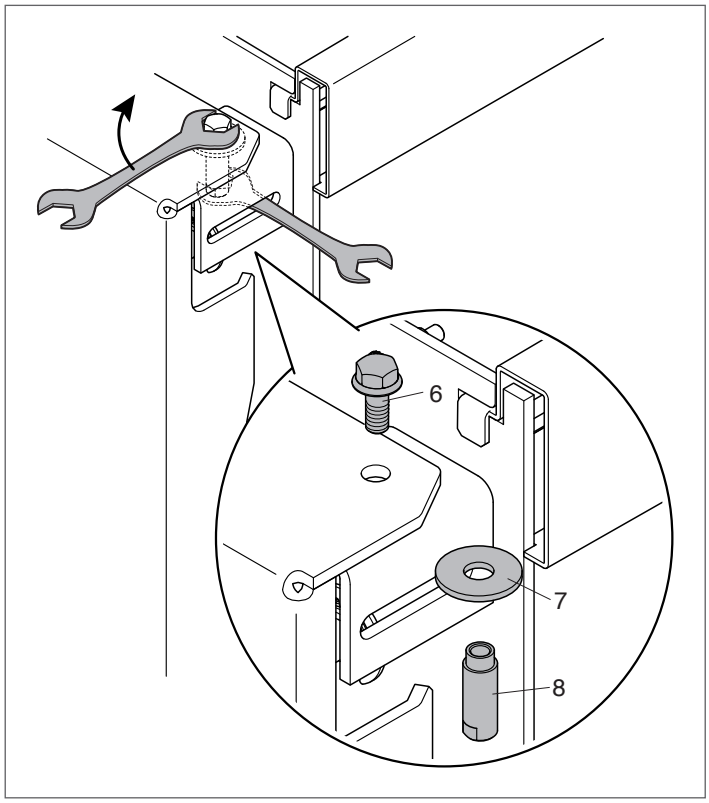

- fit the bushing (8), bolt (6) and washer (7) to the opposite side of the door.

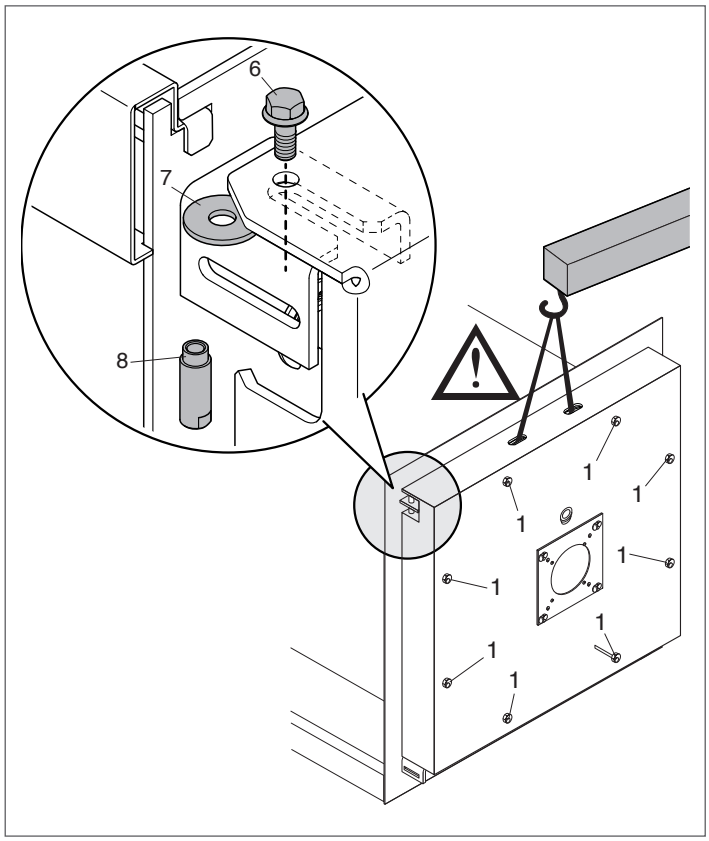

⚠ If it proves difficult to fit the washer (7) or screw the bolt (6) into the bush (8) because the door is not accurately aligned, **attach a hoist of adequate lifting capacity to the door** (see the weights and dimensions table), **slightly loosen** the fixing bolts (1) and lift the door just enough to fit the washer (7) or align the hole in the door with the hole in the hinge. **Once the bolt (6) has engaged the bush, re-tighten the door fixing bolts (1)**.

- Fit the top door stop bracket (3) to the opposite side of the door and fix it in place with the safety bolts (2);
- fit the bottom door stop bracket (5) to the opposite side of the door and fix it in place with the safety bolts (4).

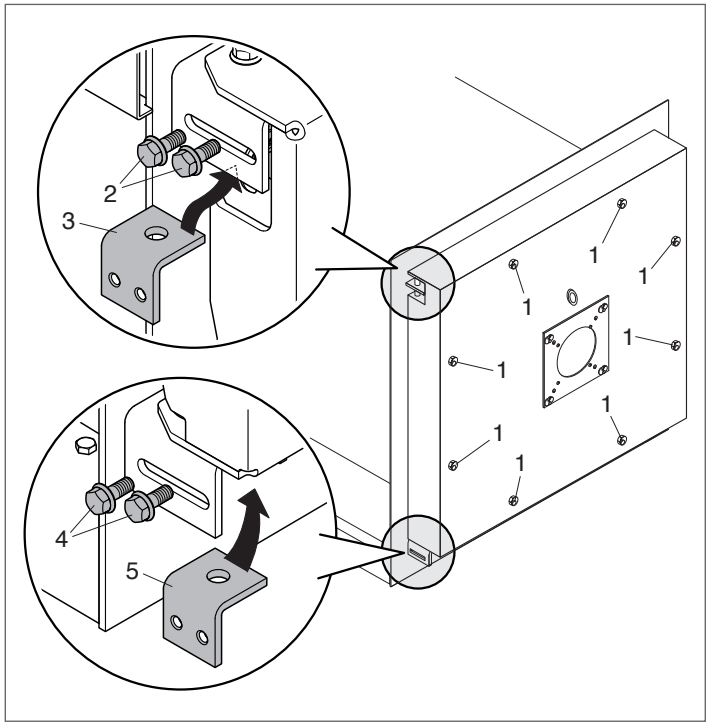

⚠ Make sure that the safety bolts (2 and 4) are securely tightened before attempting to open the door.

- Completely unscrew the main fixing bolts (1) and open the door (these bolts are captive in the door and cannot be removed);
- remove the spare hinge assembly 'B' [bolt (9), bushing (10), and washer (11)] opposite the hinged side of the door.

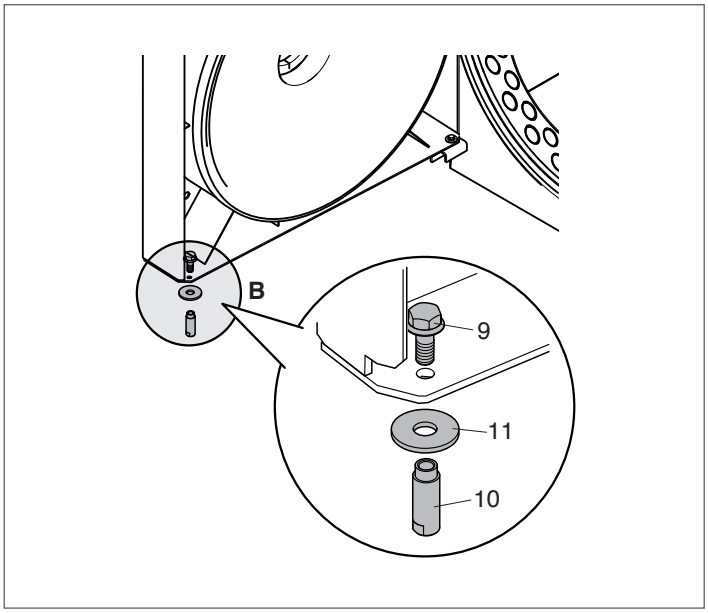

2.11 Fitting the insulation and turbulators

0pen the door and remove the insulation.

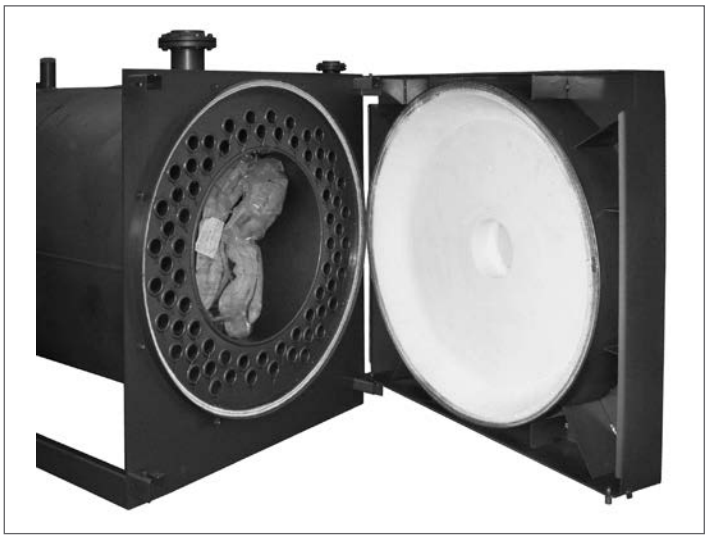

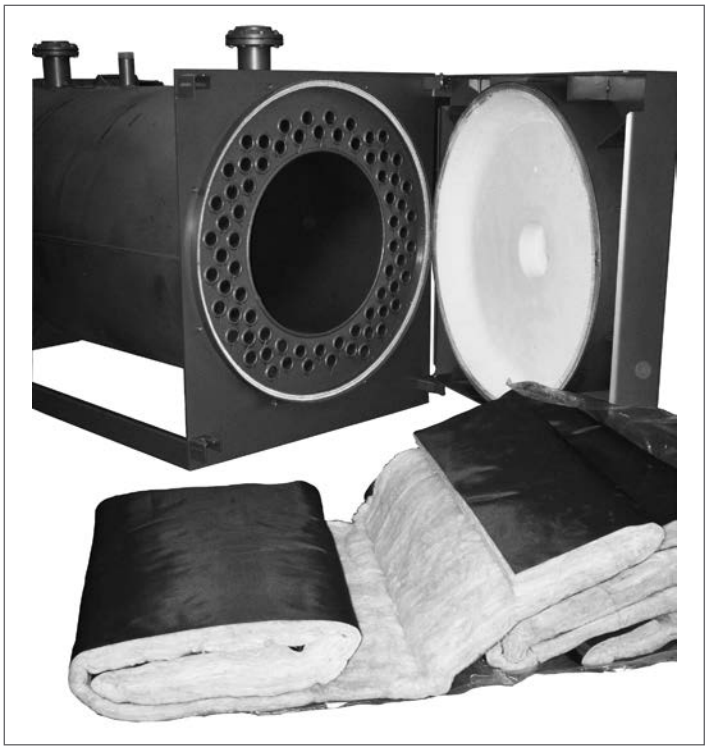

Fit the insulation over the rear of the combustion chamber first, wrapping it around as shown in the figure.

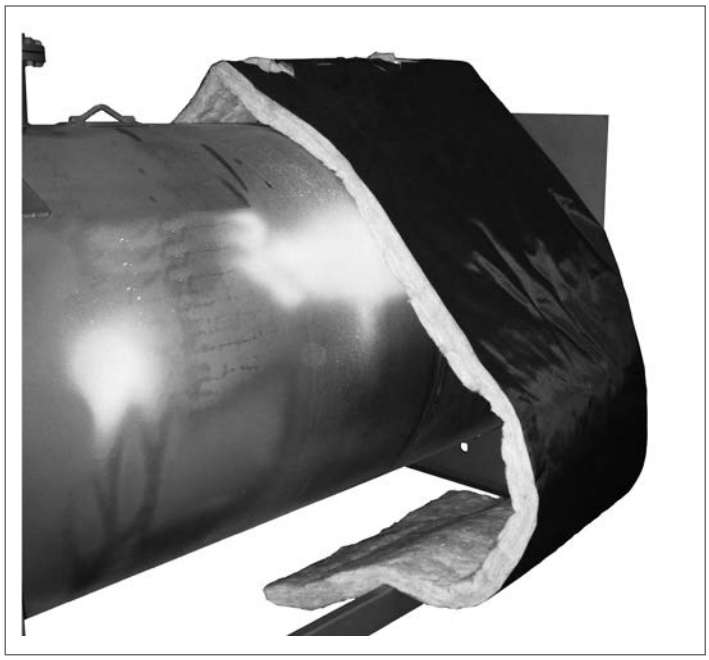

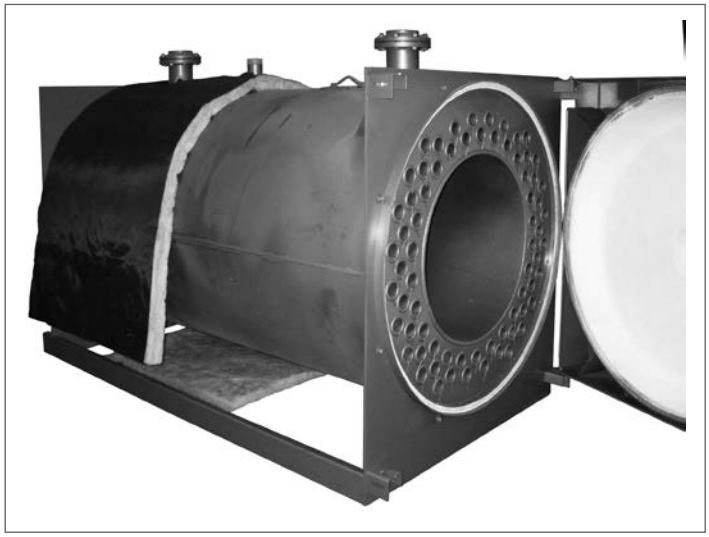

Then fit the insulation over the front.

Hold the insulation in place with the clips provided.

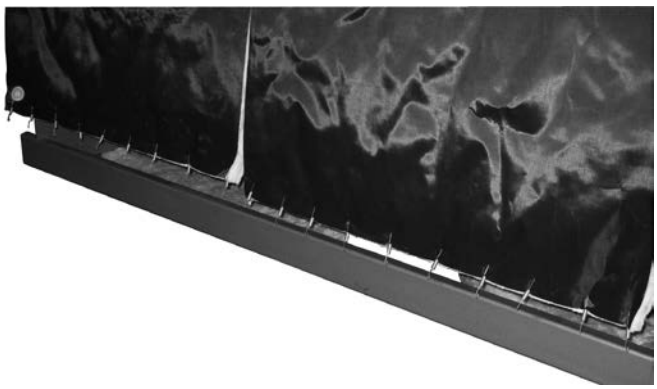





Fit the fixing clips on the turbulators and push the turbulators into the flue gas pipes until the clips make contact.

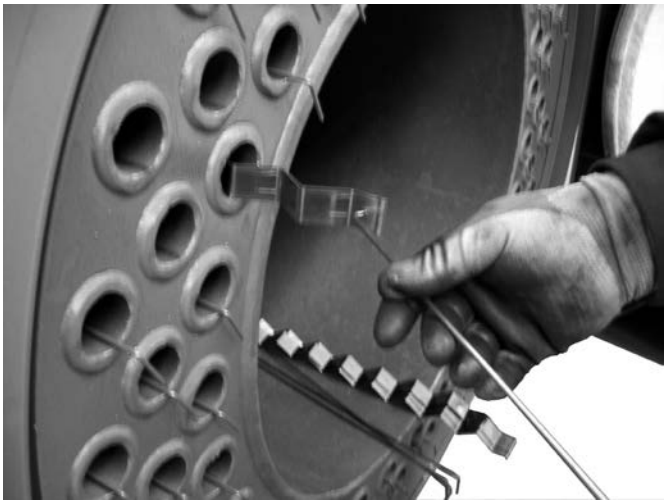

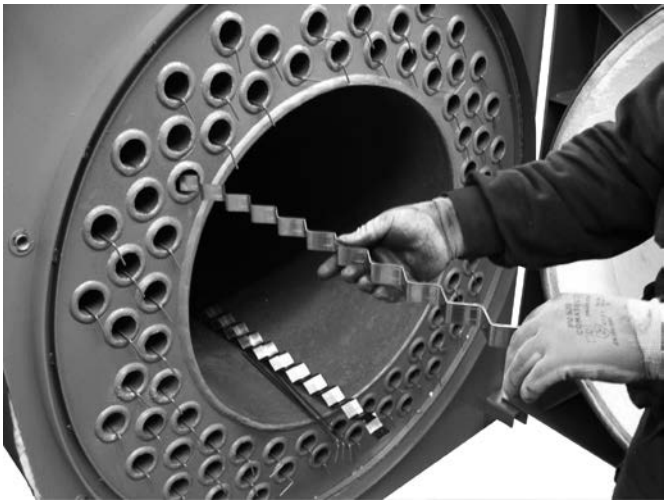



2.12 Earth connection

A terminal is provided on the front boiler head to connect the boiler body to an efficient earth system.

Proceed as follows.

- Unscrew the nut and washer (1) from the earth terminal;
- Attach the earth cable's eye connector (2) to the terminal (make sure that the cable is of adequate size and complies with legislation in the country of installation);
- Fit the nut and washer (1) to the earth terminal and tighten the nut;
- Connect the other end of the cable to the system's earth bar.

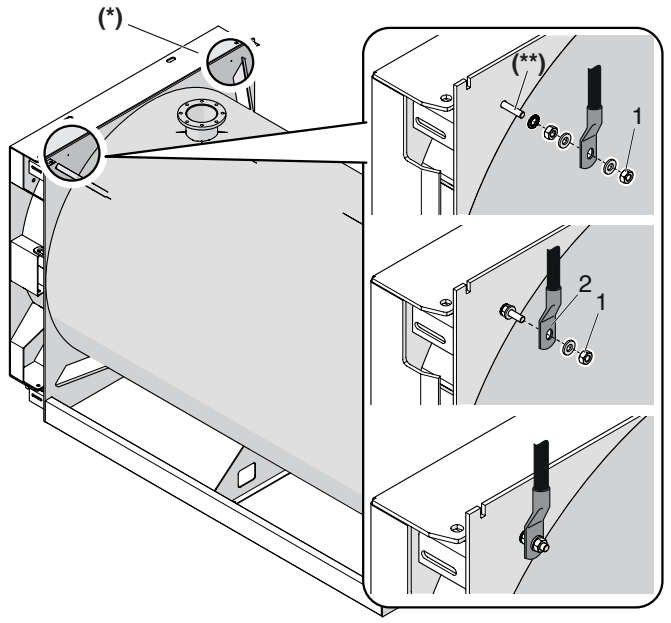

(**) **M6x30 brass**

⚠ Another hole (*) in the left side of the boiler head can also be used to earth the appliance. If you wish to use this hole for the earth connection, remove the terminal fittings from the right of the head and move them to the left earthing point.

2.13 Fitting the casing panels

- Engage the bottoms of the rear side panels (1) and front side panels (2) in the bottom rails (3) then hook their top lips over the top rails (4), running between the front and rear heads;
- secure the side panels in place with the top cross beam (5), and the screws provided;
- fit your chosen control panel. The control panel can be fitted in different positions based on the boiler model:
  - 920 models on central panel (9) (right side only) or on front upper panel (6)
  - 1020÷1700 models on central panel (9) (right or left side) or on front upper panel (6)
  - 1700÷2920 models on right or left front side panel (2)
  - 3200÷3500 models on right or left central side panel (10)
- route the electrical cables and insert the bulbs/sensors in their sockets;
- fit the cable grommets provided into their seats in the panels;
- fit, in this order, the rear top panel (7) and (8) and the central panel (9), to close the top of the boiler.

RTQ 920÷3500

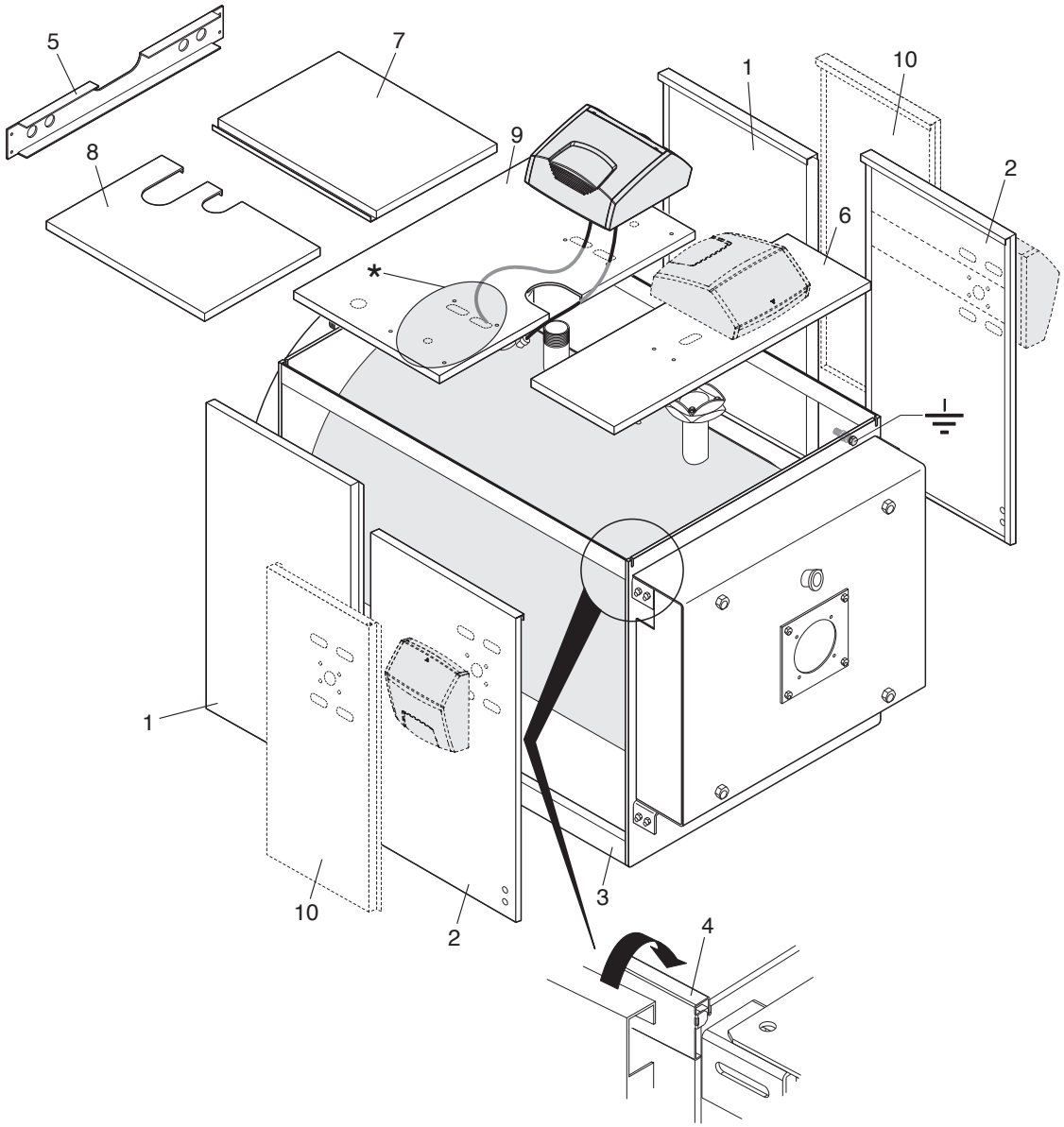

(*) **1020÷1700**

⚠ Refer to the instruction manuals your chosen control panel and burner.

- Engage the bottoms of the rear side panels (1), center panels (2)-(10) and front panels (3) in the bottom rails (4) then hook their top lips over the top rails (5), running between the front and rear heads;
- secure the side panels in place with the top cross beams (6) and the screws provided;
- fit your chosen control panel on one of the side panel (10) as instructed in the control panel's own instruction manual;
- route the electrical cables and insert the bulbs/sensors in their sockets;
- fit the cable grommets provided into their seats in the panels;
- fit, in this order, the rear top panel (7), the central one (8), and at the end the front one (9), to close the top of the boiler.

RTQ 4000÷4500

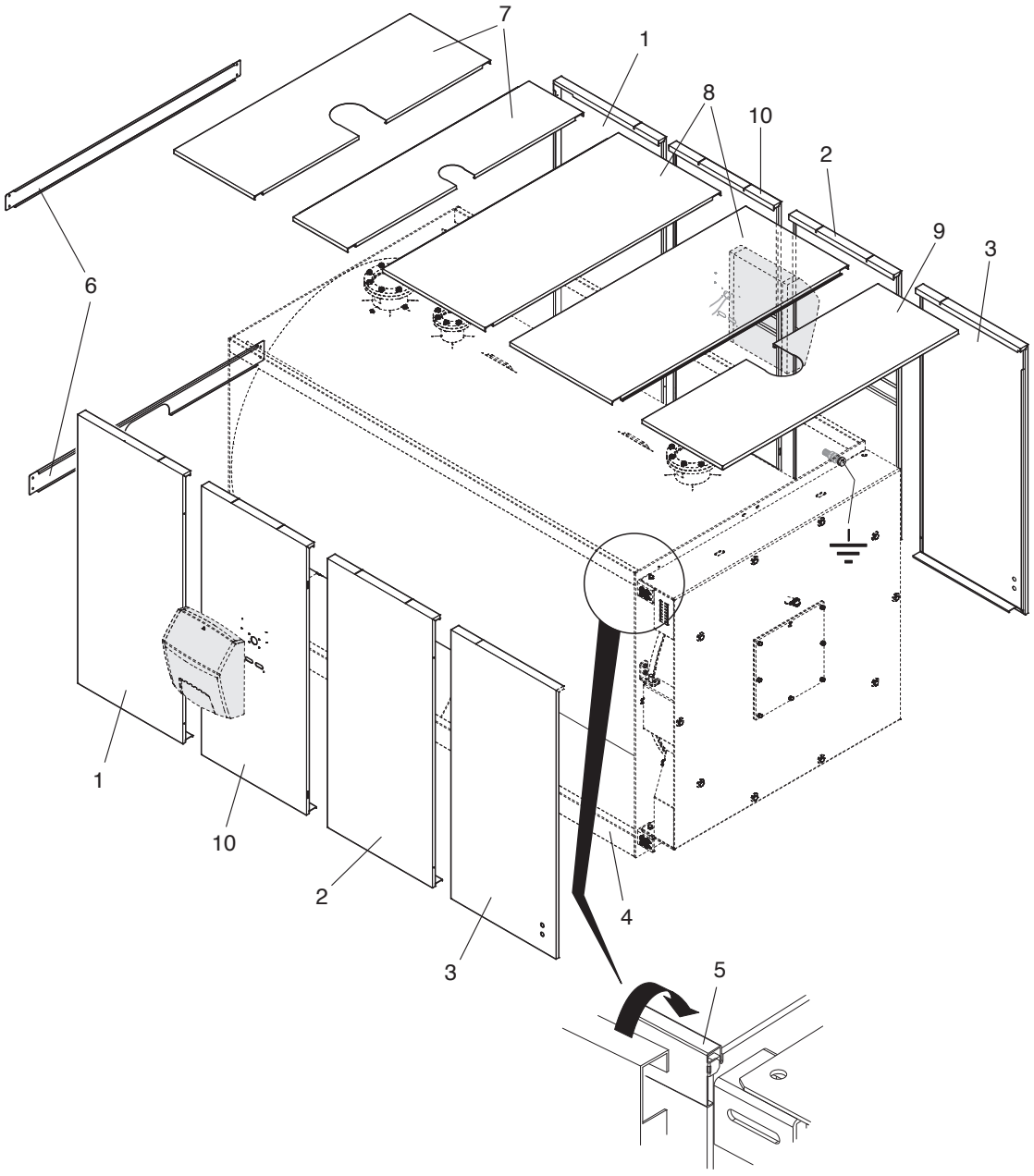

⚠ Refer to the instruction manuals your chosen control panel and burner.

- Engage the bottoms of the rear side panels (1), center panels (2)-(10) and front panels (3) in the bottom rails (4) then hook their top lips over the top rails (5), running between the front and rear heads;
- secure the side panels in place with the top cross beams (6) and the screws provided;
- fit your chosen control panel on one of the side panel (10) as instructed in the control panel's own instruction manual;
- route the electrical cables and insert the bulbs/sensors in their sockets;
- fit the cable grommets provided into their seats in the panels;
- fit, in this order, the rear top panel (7), the central one (8), and at the end the front one (9), to close the top of the boiler.

RTQ 5000

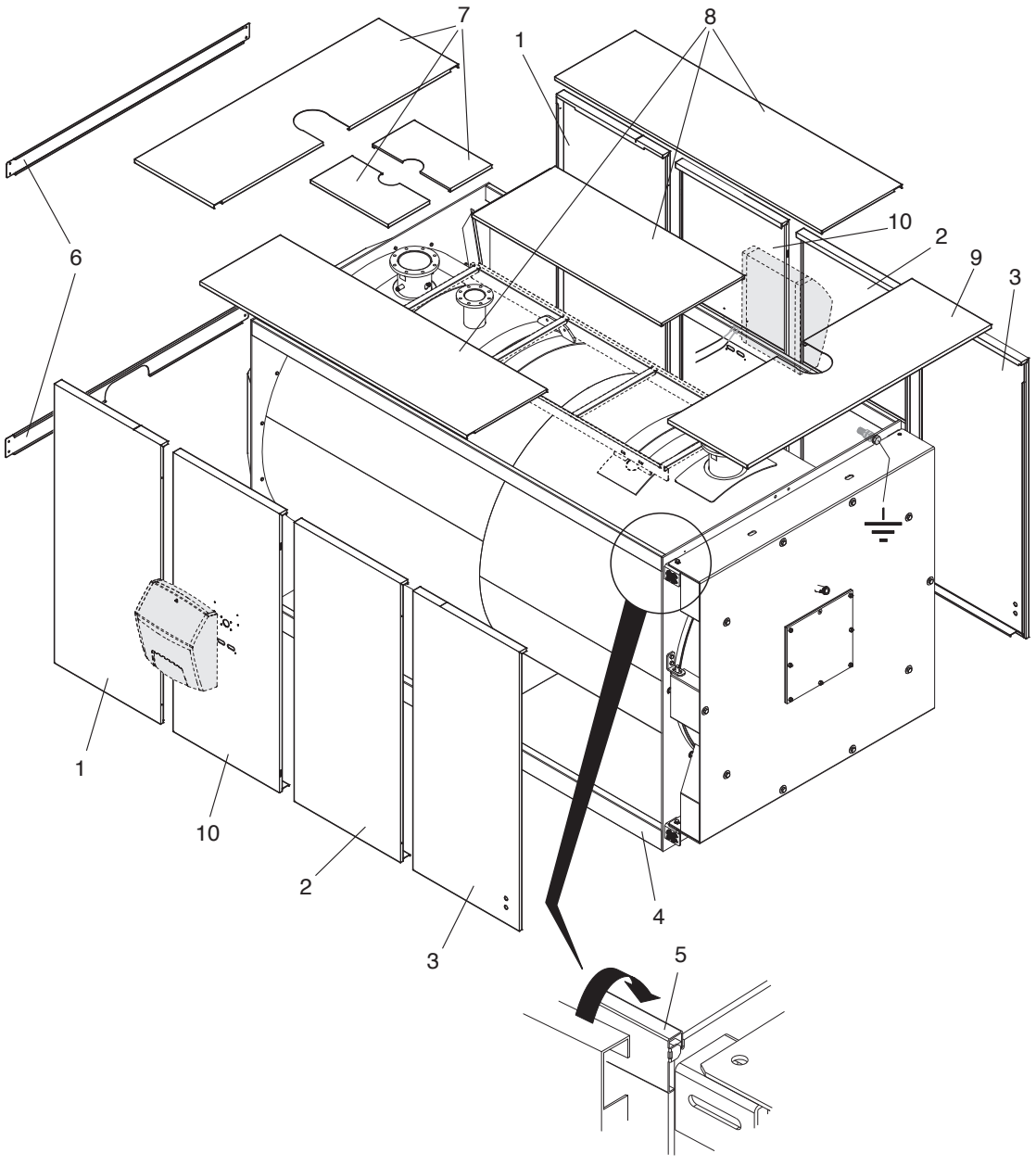

⚠ Refer to the instruction manuals your chosen control panel and burner.

2.14 Preparing for initial startup

It is essential to perform the following checks before starting up or testing the functioning of your **RIELLO RTQ** boiler. In particular, check that:

- the protective cardboard sheet (1) has been removed from the ceramic fibre;

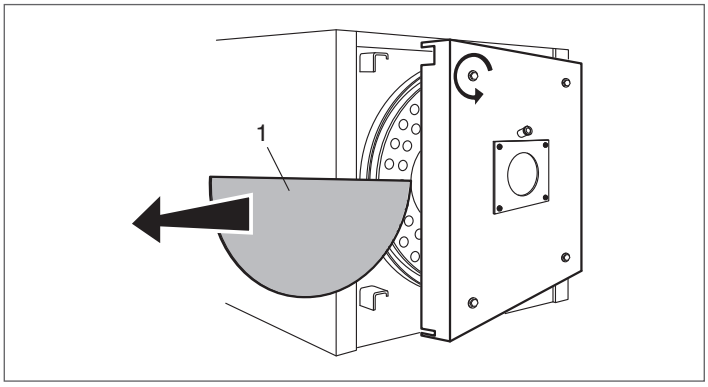

- the turbulators (2) are correctly positioned (vertical position) inside the heat exchanger tubes and the clips (3) are resting against the wall (4) of the heat exchanger;

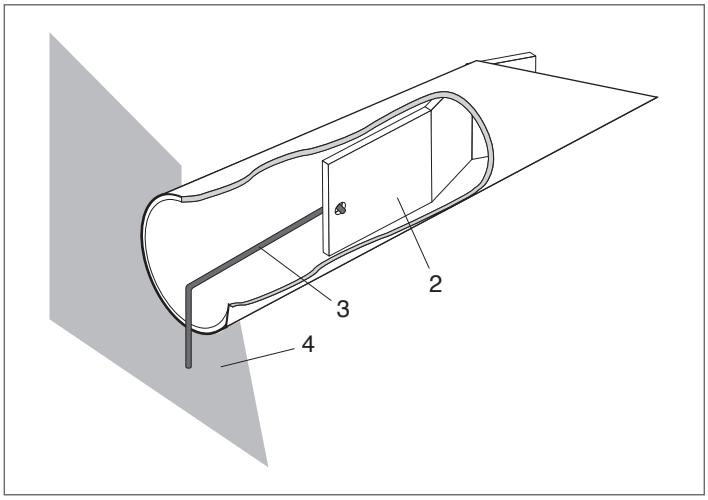

- the water and gas cocks are open;

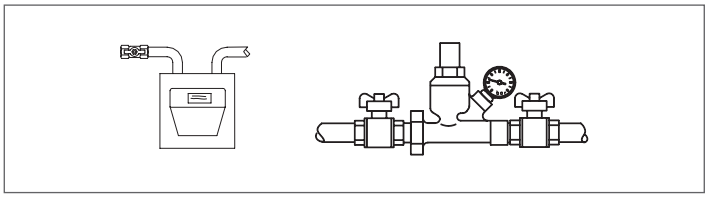

- there is an adequate fuel supply;

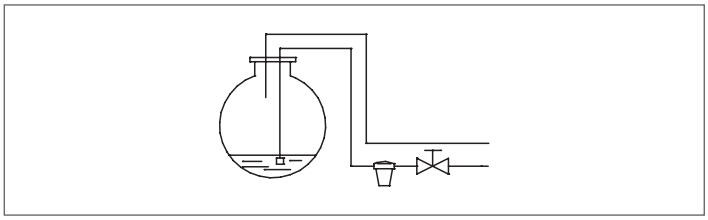

- the expansion vessel is properly charged;

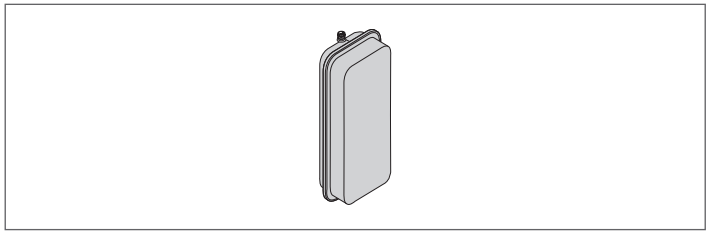

- the working pressure in the water circuit is over 1 bar but below the maximum limit specified for the boiler;
- the water circuits have been properly bled;

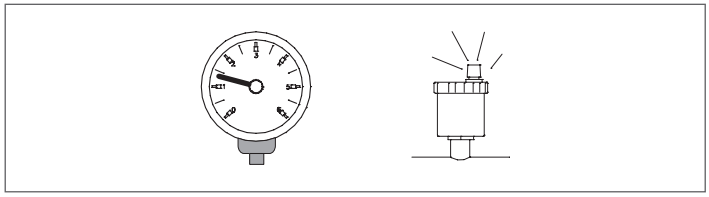

- the mains power connections to the boiler and its accessories (burner, pump, control panel, thermostats, etc.) have been properly made.

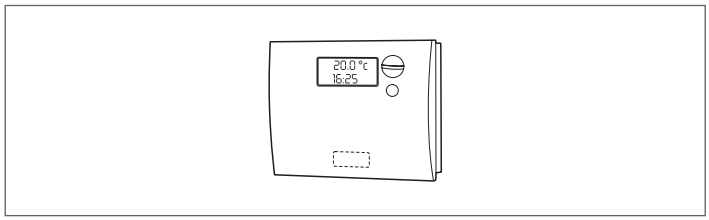

⚠ The phase-neutral polarity has been respected.

⚠ A ground (earth) connection is obligatory.

2.15 Initial startup

Once you have completed all the preparatory steps, proceed as follows to start up the boiler for the first time:

- turn the system's main power switch ON;
- if the system is equipped with a temperature controller or timer thermostat, make sure that it is switched on;

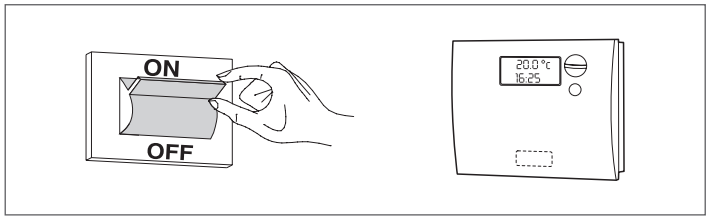

- turn the control panel power switch ON and make sure that the green power indicator lights;

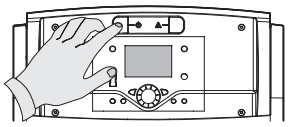

CLIMA TOP / COMFORT

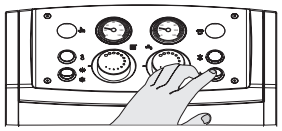

PRIME / ACS

- make the necessary settings as instructed in the instruction manual for your control panel;

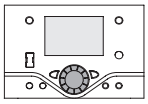

CLIMA TOP / COMFORT



PRIME / ACS

- adjust the timer thermostat/s or temperature controller to the desired temperature (~20°C);

The burner should now ignite and remain in operation until the set temperature is reached.

Subsequent starts and stops will be made automatically according to the desired temperature without the need for further intervention.

If any ignition faults or malfunctions occur, the burner performs a "LOCKOUT SHUTDOWN". This is shown by the red button light on the burner and by the warning light on the control panel.

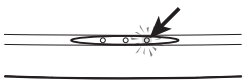

CLIMA TOP / COMFORT

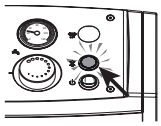

PRIME / ACS

⚠ If a "LOCKOUT SHUTDOWN" occurs, wait about 30 seconds before resetting the burner.

To reset the burner, press the red button light on the burner and wait until the flame ignites.
This operation can be repeated 2 or 3 times at the most. If the problem still persists after that, check:

- all checks listed in the burner's own instruction manual;
- all steps listed in the 'Preparing for Initial Start-up' section;
- all the electrical connections shown on the control panel wiring diagrams.

If the problem persists, check that the safety thermostat has not tripped.

⚠ If the safety thermostat trips, the boiler shuts down and a warning is displayed on the control panel (if present).
Proceed as follows to reset the safety thermostat.

- Wait until boiler temperature falls below 80°C.
- Remove the safety thermostat cover.
- Press the manual reset button.
- Wait for the complete ignition cycle to be repeated and for the flame to ignite.

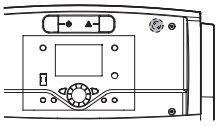

CLIMA TOP / COMFORT

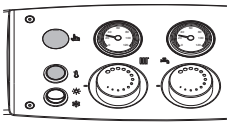

PRIME / ACS

2.16 Checks during and after initial start-up

Once the boiler has started up, make sure that it shuts down and re-starts properly when the following actions are taken:

- the boiler thermostat setting is changed

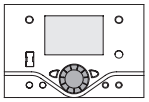

CLIMA TOP / COMFORT



PRIME / ACS

- power to the control panel is switched off and on again
- the room thermostat or timer thermostat is adjusted.

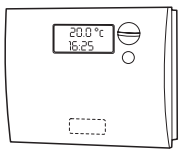

Check that there are no leaks from around the door seal. If there is any leakage of combustion gases, adjust the door as instructed on page 30.

Make sure that all the pumps in the system are free and rotate in the right direction.

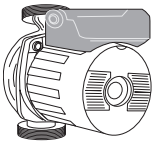

Turn off the main power switch to the boiler and make sure that the boiler shuts down properly.

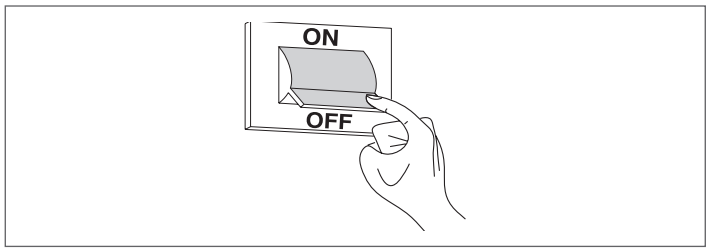

Provided all the above conditions are satisfied, start the boiler up again, then analyse the combustion fumes, measure fuel flow and re-check the door seal.

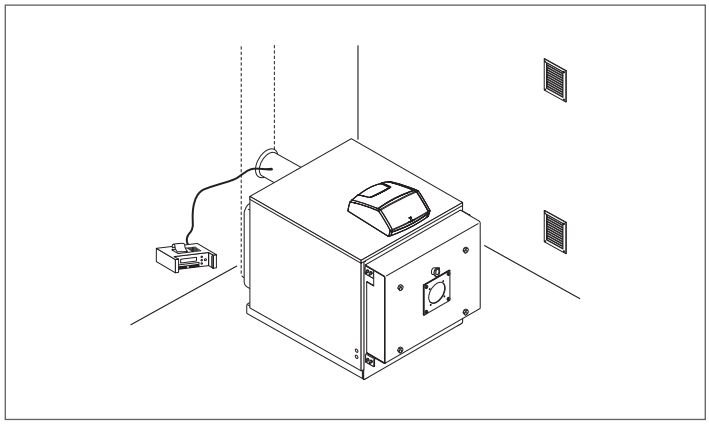

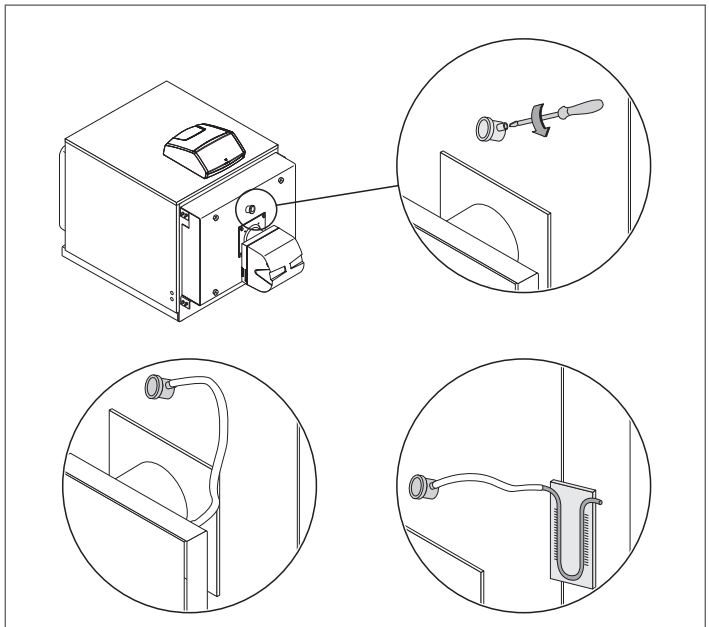

Flame inspection window cooling **Pressure measurement point**

⚠ A rubber socket is attached to the flame inspection window. If this is used as a pressure measurement point, leave the screw in place in order to close off the pressure measurement line during normal boiler functioning. If the rubber socket is used to cool the flame inspection window, remove the screw to ensure an adequate air flow.

2.17 Maintenance

Regular maintenance is a legal requirement. It is also essential for the safety, efficiency and durability of the boiler. Proper maintenance keeps consumption and emissions down, and ensures that the boiler continues to operate reliably over time.
Have your boiler serviced either by **RIELLO**'s Technical Assistance Service or by a qualified heating engineer.
Analyse the combustion fumes before commencing any maintenance. The results of fume analysis can give a clear idea of what servicing or repairs are needed.

- Turn the system's main power switch OFF
- Close all the gas cocks.

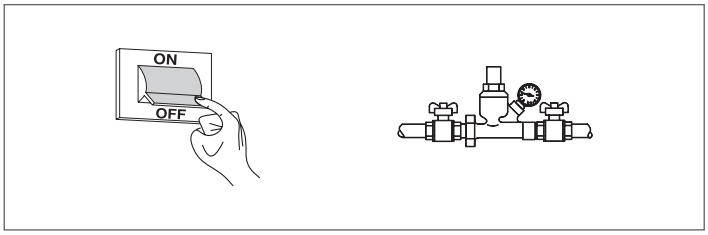

OPENING THE DOOR

- Make sure that the top safety bolts (2) and bottom safety bolts (3) on the hinged side of the boiler are tight;
- completely unscrew the main fixing bolts (1) and open the door (these bolts are captive in the door and cannot be removed).

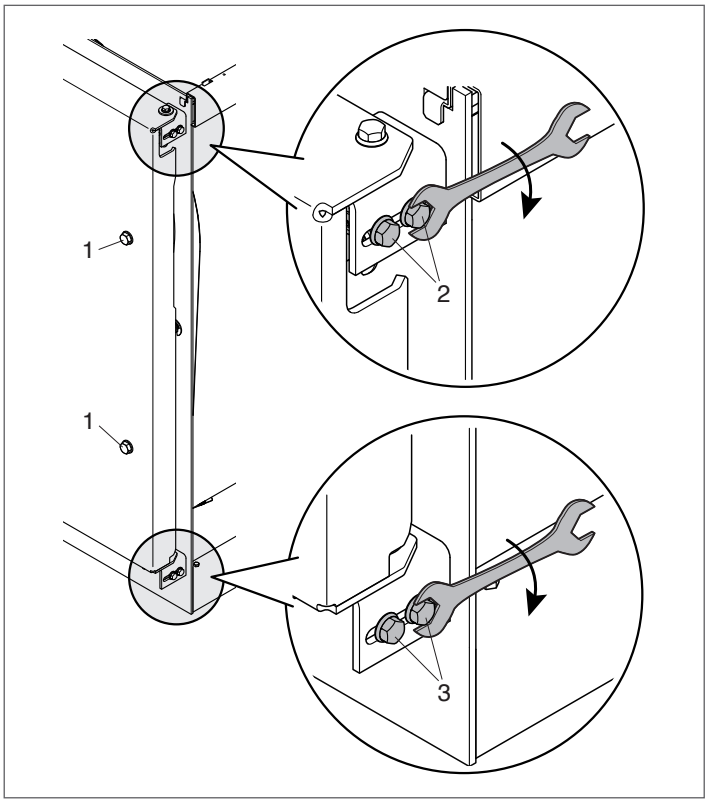

⚠ Make sure that the door is properly adjusted after every maintenance operation.

ADJUSTING THE DOOR
Make quite sure that the door presses uniformly all around the double seal to prevent dangerous fumes escaping into the air from the pressurized furnace. Proceed as follows to adjust the door seals:

- push the door shut and tighten the main fixing bolts (1) until the seals start to compress;
- loosen the safety bolts (2 and 3) then fully tighten the main door fixing bolts (1);
- re-tighten the safety bolts (2 and 3).

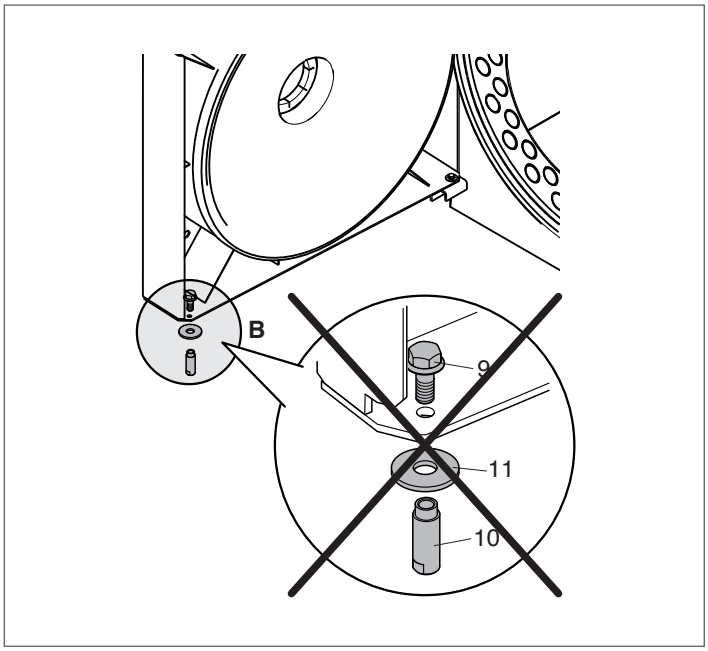

⚠ The first time you open the door, remove the spare hinge assembly 'B' [bushing (10), bolt (9), and washer (11)] opposite the hinged side of the door.

2.18 Cleaning the boiler

Clean the boiler and remove any carbon deposits from the surfaces of the heat exchanger **at least once a year**. This not only extends the boiler's working life, but also keeps it efficient in terms of heat output and consumption.

Proceed as follows to clean the boiler:

- open the front door (1) and pull out the turbulators (2);

⚠ If you need to replace any turbulators, make sure that the replacements have the characteristics listed in the table below.

- Use a flue brush (3) or other suitable tool to clean inside the combustion chamber and the flue gas pipes;
- open the inspection window (4) and clean out any deposits from inside the flue gas box.

If more thorough cleaning is required, remove the flue gas box cover (5). Fit a new glass fibre seal when fitting the cover again. Check at regular intervals that the condensate drain (6) is not blocked.
On completion of cleaning, follow the above steps in the reverse order to refit all removed parts.

⚠ When using heavy oil fuels (e.g. naphtha, etc.) clean/service the boiler more frequently and periodically check:

- clean the boiler's heat exchange surfaces;
- check and clean the turbulators. Replace if worn or damaged.

MODEL	RTQ							
	920	1020	1250	1500	1510	1700	2020	2320
N° turbulators	66	76	80	78	78	75	84	96

MODEL	RTQ						
	2620	2920	3200	3500	4000	4500	5000
N° turbulators	94	106	110	119	130	140	110

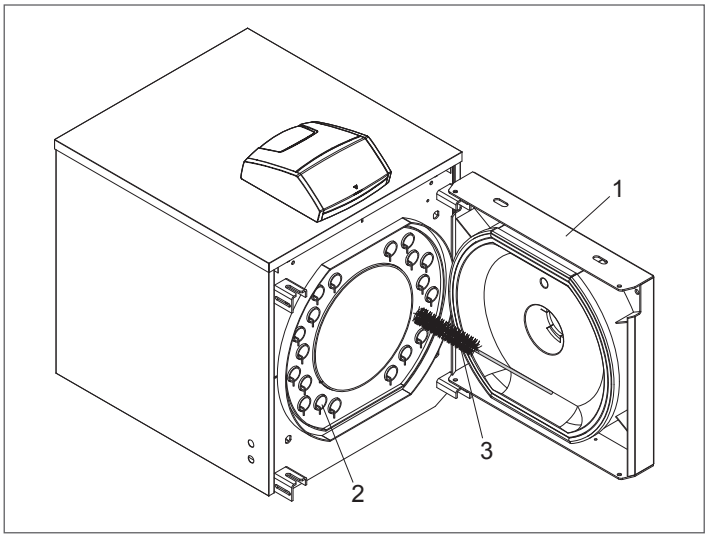

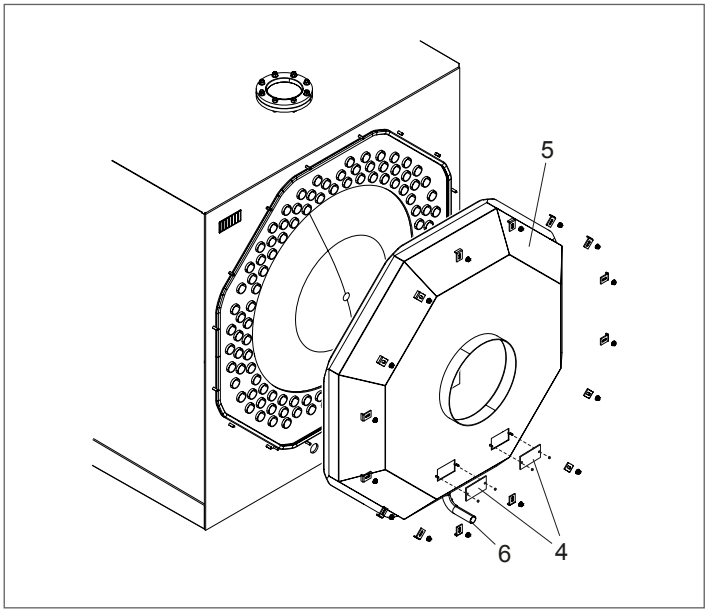

2.19 Troubleshooting

FAULT	CAUSE	SOLUTION
The boiler becomes dirty very quickly	Burner badly adjusted	– Check the adjustment of the burner (perform flue gas analysis)
	Blockage in stack	– Clean the flue gas pipes and stack
	Burner air intake dirty	– Clean the burner air intake
The boiler does not reach its temperature setpoint	Boiler dirty	– Clean the flue gas pipes
	Boiler and burner mismatched	– Check specifications and settings
	Insufficient air/fuel flow to burner	– Check and adjust the burner
	Incorrect adjustment	– Check correct functioning – Check the temperature setting
The boiler keeps shutting down, and the control panel warning light comes on	Incorrect adjustment	– Check correct functioning – Check the temperature setting – Check the electrical wiring – Check the sensors
	No water supply	– Check the circuit pressure
	Air in the circuit	– Check the circuit pressure – Check the vent valve
The boiler has reached the set temperature but the radiators are still cold	Air in the circuit	– Bleed the circuit
	Pump malfunctioning	– Check/unseize the pump
	Problem with minimum temperature thermostat (if present)	– Check the temperature setting
	Problem with minimum temp. thermostat (if present)	– Check the efficiency of the expansion vessel
There is a smell of fumes	Fumes escaping into the air	– Clean the boiler body – Clean the flue gas pipes – Check that the boiler, flue gas pipes and stack are all properly sealed – Check the door seal
There is a smell of gas	Gas supply circuit	– Check the seals, possible blockages and fuel quality.
The safety valve keeps opening	Circuit pressure too high	– Check the circuit pressure – Check pressure reducer functioning – Check pressure reducer setting
	Problem with heating system expansion vessel	– Check the efficiency of the expansion vessel

3 USE

3.1 Putting into service

Have **RIELLO**'s Technical Assistance Service start up your **RIELLO RTQ** boiler for the first time. Once this has been done, the boiler can be left to function automatically.

Under certain circumstances, such as after long periods of disuse, the service engineer responsible for the boiler may need to re-start it without involving the Technical Assistance Service.
To do so, perform the following checks and operations:

- check that the gas cock and heating water cock are open;
- while the system is still cold, check that working pressure in the water circuit is over 1 bar but below the maximum limit specified for the boiler;

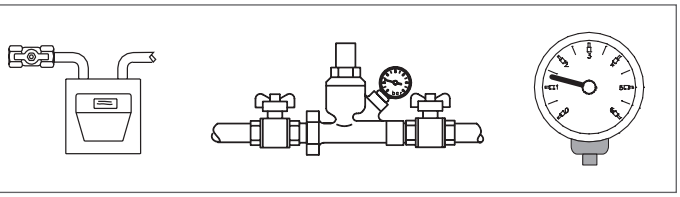

- turn the system's main power switch ON;
- if the system is equipped with a temperature controller or timer thermostat, make sure that it is switched on;

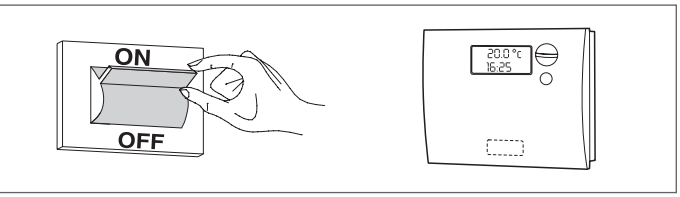

- turn the control panel power switch ON and make sure that the green power indicator lights;

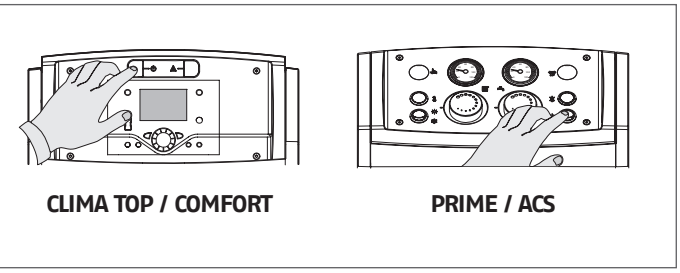

CLIMA TOP / COMFORT **PRIME / ACS**

- make the necessary settings as instructed in the instruction manual for your control panel;

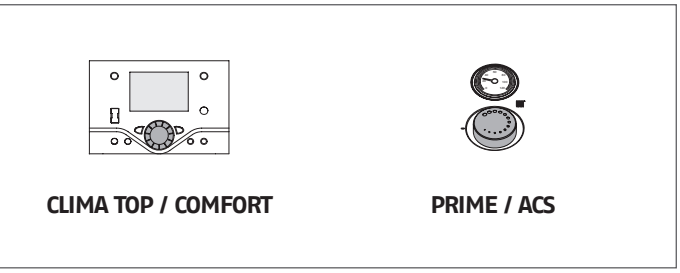

CLIMA TOP / COMFORT **PRIME / ACS**

- adjust the timer thermostat/s or temperature controller to the desired temperature (~20°C);

The burner should now ignite and remain in operation until the set temperature is reached.

Subsequent starts and stops will be made automatically according to the desired temperature without the need for further intervention.

If any ignition faults or malfunctions occur, the burner performs a "LOCKOUT SHUTDOWN". This is shown by the red button light on the burner and by the warning light on the control panel.

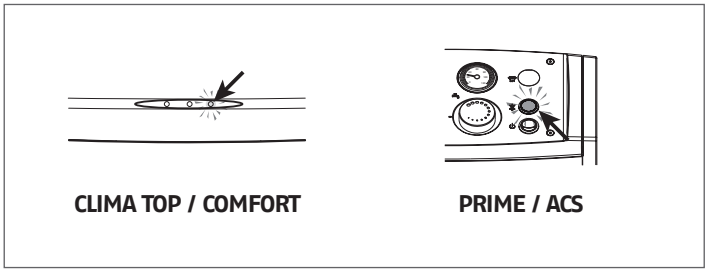

CLIMA TOP / COMFORT **PRIME / ACS**

⚠ If a "LOCKOUT SHUTDOWN" occurs, wait about 30 seconds before resetting the burner.

To reset the burner, press the red button light on the burner and wait until the flame ignites.
This operation can be repeated 2 or 3 times at the most. If the problem still persists after that, check:

- all checks listed in the burner's own instruction manual;
- all steps listed in the 'Preparing for Initial Start-up' section;
- all the electrical connections shown on the control panel wiring diagrams.

If the problem persists, check that the safety thermostat has not tripped.

⚠ If the safety thermostat trips, the boiler shuts down and a warning is displayed on the control panel (if present).

Proceed as follows to reset the safety thermostat.

- Wait until boiler temperature falls below 80°C.
- Remove the safety thermostat cover.
- Press the manual reset button.
- Wait for the complete ignition cycle to be repeated and for the flame to ignite.

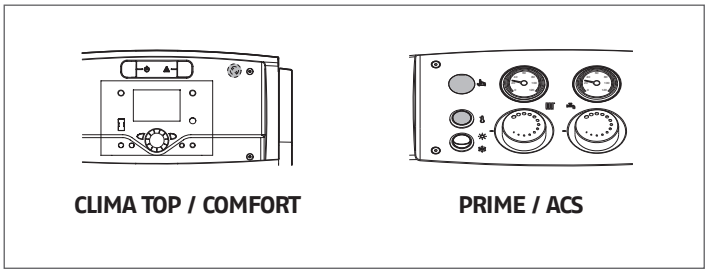

CLIMA TOP / COMFORT **PRIME / ACS**

3.2 Temporary shutdown

If you need to shut down the system for a short period, proceed as follows.

- turn the control panel power switch OFF and make sure that the green power indicator goes out;

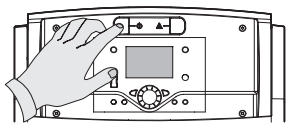

CLIMA TOP / COMFORT

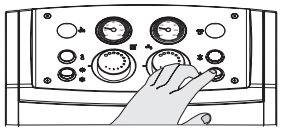

PRIME / ACS

- turn the mains power switch OFF;

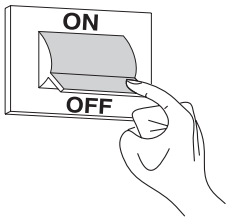

⚠ Do NOT perform this procedure if outdoor temperature falls below ZERO (risk of freezing).

Then proceed as follows:

- make the necessary settings as instructed in the instruction manual for your control panel;

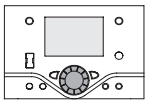

CLIMA TOP / COMFORT



PRIME / ACS

- make sure that the temperature controller or timer / room thermostat is set to "frost protection" mode;

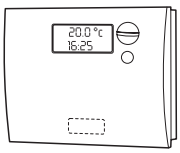

3.3 Preparing for extended periods of disuse

If the boiler is not going to be used for an extended period of time, perform the following operations:

- Turn the control panel power switch OFF and make sure that the green power indicator goes out

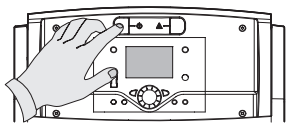

CLIMA TOP / COMFORT

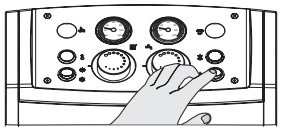

PRIME / ACS

- Turn the main system switch "off"

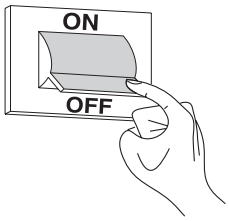

- Close the fuel cock and heating circuit water cock

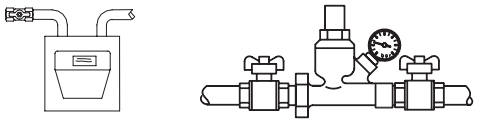

- Drain the central heating circuit if there is any risk of freezing.

⚠ Contact your local **RIELLO** Technical Assistance Service if you encounter any problems in completing the above procedure.

3.4 Cleaning

Use a cloth damped in soapy water to clean the boiler's external casing.
To remove stubborn marks, use a cloth damped in a 50% mix of water and denatured alcohol or a suitable cleaning product.
Carefully dry after cleaning.

⛔ Do not use abrasive cleaning pads or powder detergents.

⛔ Never clean the boiler without first disconnecting it from the mains electricity supply by turning the mains power switch and the control panel switch OFF.

⚠ The combustion chamber and flue pipes must be cleaned periodically by **RIELLO** Technical Assistance Service or by a qualified heating engineer (see page 30).

3.5 Maintenance

Please remember that THE PERSON RESPONSIBLE FOR SYSTEM MANAGEMENT MUST ENSURE THAT PROFESSIONALLY QUALIFIED HEATING ENGINEERS UNDERTAKE PERIODIC MAINTENANCE AND COMBUSTION EFFICIENCY MEASUREMENTS.

RIELLO's Technical Assistance Service is qualified to satisfy these legal requirements and can also provide useful information on MAINTENANCE PROGRAMMES designed to guarantee:

- Greater safety
- Compliance with applicable legislation
- Freedom from the risk of fines in the event of spot checks.

Regular maintenance is essential for the safety, efficiency and durability of the boiler.
Servicing is a legal requirement and must be performed at least once a year by a professionally qualified heating engineer.

3.6 Useful information

Seller:.....
Mr.: .....
Address: .....
Tel.:.....

Installer:.....
Mr.: .....
Address: .....
Tel.:.....

Technical Assistance Service: .....
Mr.: .....
Address: .....
Tel.:.....

Date	Work done

Fuel oil supplier: .....
Mr.: .....
Address: .....
Tel.:.....

Date	Quantity supplied	Date	Quantity supplied	Date	Quantity supplied	Date	Quantity supplied

RIELLO

RIELLO S.p.A.
Via Ing. Pilade Riello, 7
37045 – Legnago (VR)
www.riello.com

The manufacturer strives to continuously improve all products. Appearance, dimensions, technical specifications, standard equipment and accessories are therefore liable to modification without notice.