cod. 20182580 rev. 6 10/2026

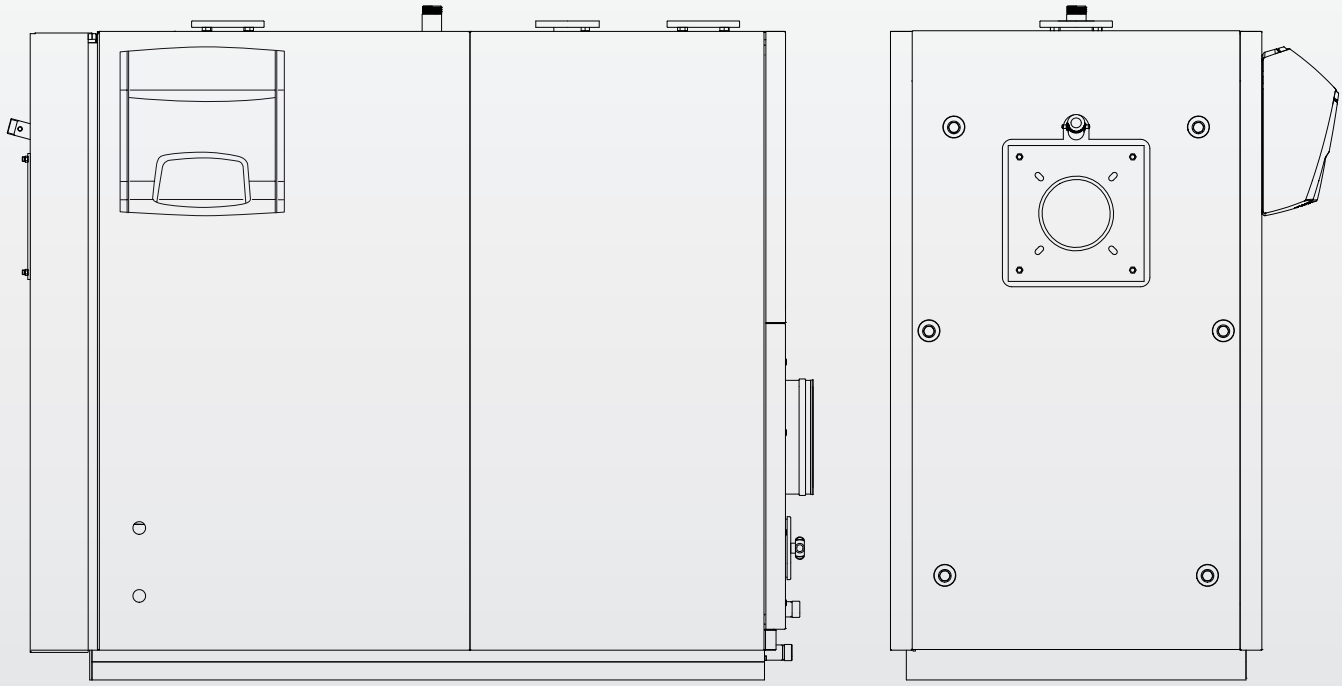

TAU 115÷600 N OIL

EN INSTALLATION, TECHNICAL ASSISTANCE SERVICE AND SYSTEM MANAGEMENT MANUAL

RIELLO

RANGE

MODEL	CODE
TAU 115 N OIL	20124406
TAU 150 N OIL	20124407
TAU 210 N OIL	20124408
TAU 270 N OIL	20124409
TAU 350 N OIL	20124410
TAU 450 N OIL	20124418
TAU 600 N OIL	20124419

ACCESSORIES
For a complete list of accessories and details of their compatibility, refer to the Catalogue.

Dear Customer,
Thank you for choosing a **RIELLO** boiler. You have purchased a modern, high efficiency, quality product that is designed to give dependable and safe service and to provide comfort in the home for many years to come. Arrange for your boiler to be serviced regularly by an authorised Technical Assistance Service **RIELLO**. Their personnel are specially trained to keep your boiler efficient and cheap to run. They also stock any original spare parts that might be required.
This instruction manual contains important instructions and precautions that must be observed to ensure the efficient functioning of your **TAU N OIL** boiler.

Please accept our renewed thanks for your purchase
Riello S.p.A.

CONFORMITY

RIELLO TAU N OIL boilers conform to:
- Directive 92/42/EEC on efficiency requirements
- Electromagnetic Compatibility Directive 2014/30/EU
- Low Voltage Directive 2014/35/EU
- Regulation (EU) 2016/426

Models up to 400 kW conform to the Energy-Related Products Directive 2009/125/EC and to the EU Delegated Regulation 813/2013.

CE

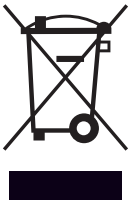

At the end of its life, the product should be not be disposed of as solid urban waste, but rather it should be handed over to a differentiated waste collection centre.

CONTENTS

1 GENERAL INFORMATION 4
1.1 General Safety Information 4
1.2 Precautions. 4
1.3 Description of the appliance 5
1.5 Identification 5
1.4 Control panels. 5
1.6 System layout 6
1.7 Burner combination 7
1.7.1 TAU N OIL with power <400 kW 7
1.7.2 TAU N OIL with power >400 kW 7
1.7.3 TAU N OIL with power <400 kW - Can run on GAS 8
1.7.4 TAU N OIL with power <400 kW - Can run on GAS - PREMIX 8
1.7.5 TAU N OIL with power >400 kW - Can run on GAS 9
1.7.6 Important notes for fitting the burner. 10
1.7.7 Burner plate 10
1.8 Technical specifications. 11
1.8.1 Technical data in conjunction with diesel burners <400kW 11
1.8.2 Technical data in conjunction with diesel burners >400kW 12
1.8.3 Technical data in conjunction with gas burners <400kW 13
1.8.4 Technical data in conjunction with gas burners <400kW - PREMIX 14
1.8.5 Technical data in conjunction with gas burners >400kW 15

2 SYSTEM MANAGER 16
2.1 Putting into service 16
2.2 Temporary shutdown 17
2.3 Preparing for extended periods of disuse 17
2.4 Cleaning 18
2.5 Maintenance. 18
2.6 Useful information 19

3 INSTALLER. 20
3.1 Unpacking the product 20
3.2 Overall dimensions and weights 21
3.3 Handling. 21
3.4 Installation premises 22
3.5 Location of sensors 23
3.6 Water-side pressure drop 24
3.7 Water in central heating systems. 25
3.7.1 Use of antifreeze 26
3.7.2 Glycol 26
3.8 Water connections 28
3.8.1 Schematic diagram 30
3.9 Condensate evacuation. 32
3.10 Neutralising the condensate 33
3.10.1 Kit for **GAS** fired TAU N OIL boilers 33
3.10.2 Kit for **DIESEL** fired TAU N OIL boilers 35
3.11 Discharge of combustion products 36
3.12 Installation of Premixed Gas Burners for flue-gas stack configuration in B23P. 37
3.13 Door hinges 38
3.14 Changing the direction of door opening 38
3.15 Removing the hinge assembly "B" 41
3.16 Earth connection 41
3.17 Fitting the casing panels 42
3.17.1 Applying labels 43

4 TECHNICAL ASSISTANCE SERVICE. 44
4.1 Preparing for initial startup 44
4.2 Initial startup 44
4.3 Checks during and after initial start-up 45
4.4 Maintenance. 46
4.4.1 Door opening 46
4.4.2 Adjusting the door 46
4.5 Cleaning the boiler 47
4.5.1 Clean condensation trap 48
4.6 Troubleshooting 49

The following symbols are used in this manual:

⚠ **CAUTION! =** Identifies actions that require caution and adequate preparation.

⊖ **STOP! =** Identifies actions that you MUST NOT do.

This manual, Code 20182580 - Rev. 6 (10/2026) comprises 52 pages.

1 GENERAL INFORMATION

1.1 General Safety Information

⚠ The boiler is delivered in separate crates. Check that it is complete, undamaged and as ordered as soon as you receive it. Report any discrepancies or damage to the **RIELLO** dealer who sold it.

⚠ This product must be installed by a legally qualified heating engineer. On completion of the installation, the installer must issue the owner with a declaration of conformity confirming that the installation has been completed to the highest standards in compliance with the instructions provided by **RIELLO** in this instruction manual, and that it conforms to all applicable laws and standards.

⚠ This product must only be used for the purpose for which it is designed and made, as specified by **RIELLO**. **RIELLO** declines all responsibility, contractual or other, for damage to property or injury to persons or animals caused by improper installation, adjustment, maintenance or use.

⚠ If you notice any water leaking from the boiler, disconnect it immediately from the mains electricity supply, shut off the water supply, and notify your local **RIELLO**'s Technical Assistance Service or a qualified heating engineer immediately.

⚠ Periodically check that operating pressure in the water circuit is over 1 bar but below the maximum limit specified for the boiler. If this is not the case, contact Technical Assistance Service **RIELLO** or a professionally qualified heating engineer.

⚠ If the boiler is not going to be used for an extended period of time, perform the following operations:
- Switch the boiler OFF at the control panel
- Turn the main system switch "off"
- Close the fuel cock and heating circuit water cock
- Drain the central heating circuit if there is any risk of freezing.

⚠ The boiler must be serviced at least once a year.

⚠ This instruction manual is an integral part of the boiler. It must be kept safe and must ALWAYS accompany the boiler, even if it is sold to another owner or transferred to another user or to another installation. If you damage or lose this manual, order a replacement immediately from your local **RIELLO**'s Technical Assistance Service.

1.2 Precautions

The operation of any appliance that uses fuel, electrical power and water demands that a number of fundamental safety precautions be respected:

⊖ It is forbidden to use electrical devices or equipment, such as switches, appliances, etc. if there is a smell of gas or unburnt products. If so:
- Ventilate the room, opening doors and windows
- Close the fuel shut-off cock
- Report the fault immediately to the **RIELLO**'s Technical Assistance Service or a professionally qualified heating engineer.

⊖ Do not touch the boiler while barefoot or wet.

⊖ Never clean or service the boiler without first disconnecting it from the mains electricity supply by turning the main power switch and the control panel switch OFF.

⊖ Do not tamper with or adjust the safety or control devices without prior authorisation and instructions from the manufacturer.

⊖ Do not plug or block the condensate drain outlet.

⊖ Never pull, disconnect, or twist the electrical cables coming from the appliance even if it is disconnected from the mains electricity supply.

⊖ Do not obstruct or restrict the vents in the room where the boiler is installed. Adequate ventilation is essential for correct combustion.

⊖ Do not expose the boiler to the elements. It is designed to work indoors.

⊖ Do not switch the boiler off if outdoor temperature drops below ZERO (risk of freezing).

⊖ Do not store containers of flammable substances in the room where the boiler is installed.

⊖ Do not allow children or persons with reduced physical, sensorial or mental abilities or with insufficient experience and knowledge to operate this system without proper supervision from the person responsible for its safe use.

⊖ Do not dispose of packaging material into the environment, or leave it within the reach of children, since it can become a potential hazard. Dispose of packaging material in compliance with applicable legislation.

1.3 Description of the appliance

TAU N OIL RIELLO steel boilers are triple flue pass, condensing boilers for installation in a boiler room. While they are designed primarily for central heating purposes, in conjunction with a suitable storage cylinder they can also be used to produce domestic hot water.
All parts that come into contact with the combustion gases are made from titanium stabilised stainless steel to ensure maximum resistance to the corrosive action of acid condensation.
The boiler has been designed with the combustion chamber at the top and the smooth pipe tube bundle at the bottom to optimise heat exchange and energy efficiency and to maximise the condensing effect.
The boiler has a high total water content which is differentially distributed between its top and bottom sections. This allows outgoing water to reach the set temperature quickly while maintaining the condensing effect and the water heating time around the tube bundle for as long as possible.

TAU N OIL boilers feature lightly pressurised combustion chambers for a smoother burner action, and high temperature resistant, stainless steel turbulators inside the tube bundle for maximum burner efficiency.
The boiler body is thoroughly insulated with a layer of high density glass wool.
The paint finished external panelling is also internally insulated with a layer of high density glass wool.
The boiler's front door and the flue gas chamber can be opened completely to facilitate the inspection, maintenance and cleaning of internal parts and to speed up servicing in general.
The front door can open in either direction and can be opened without removing the burner. The door is factory fitted with hinges on the left, but these can be reversed if necessary to suit individual installations.

1.4 Control panels

The **RIELLO** control panels that can be used with **RIELLO TAU N OIL** steel boilers are listed below. These control panels cater for all the needs of the heating system and of all the devices installed in it.

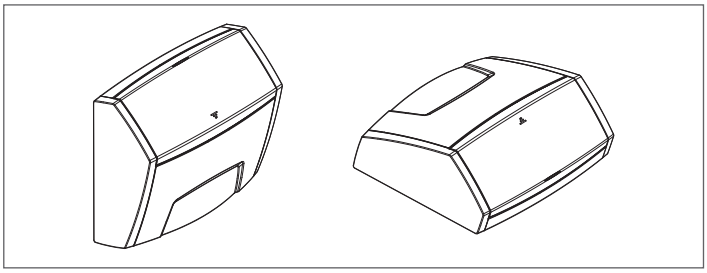

RIELLOtech CLIMA COMFORT for central heating (1 direct zone and 1 mixed zone) and domestic hot water production with a single stage burner. Also for controlling solar heating system and cascaded boiler systems.

RIELLOtech CLIMA MIX for controlling 1 additional mixed zone.

RIELLOtech PRIME for central heating only (1 direct zone) with a single or two stage burner.

RIELLOtech PRIME ACS for central heating (1 direct zone) and domestic hot water production with a single or two stage burner.

When the RIELLOtech CLIMA COMFORT control panel is installed, the relative sensor must be fitted into the existing sheath on the boiler's return line (cold water). For the accessories codes, refer to the Catalogue.

1.5 Identification

The products are identified by:

Serial number plate
This is located on the boiler body and specifies the serial number, model, and furnace power.

Data plate
This lists the technical specifications and performance of the product. It comes inside the documentation envelope. On completion of the installation, the installer MUST apply it in a clearly visible position at the top of one of the side panels. If you damage or lose this label, order a replacement immediately from **RIELLO**'s Technical Assistance Service.

If these plates or any other means of clearly identifying the product are defaced, removed or lost, proper installation and servicing may be rendered difficult.

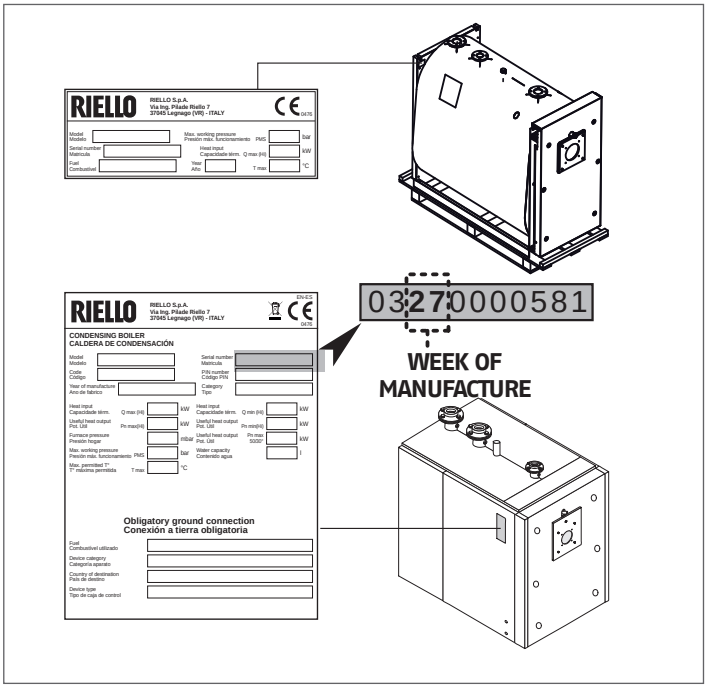

1.6 System layout

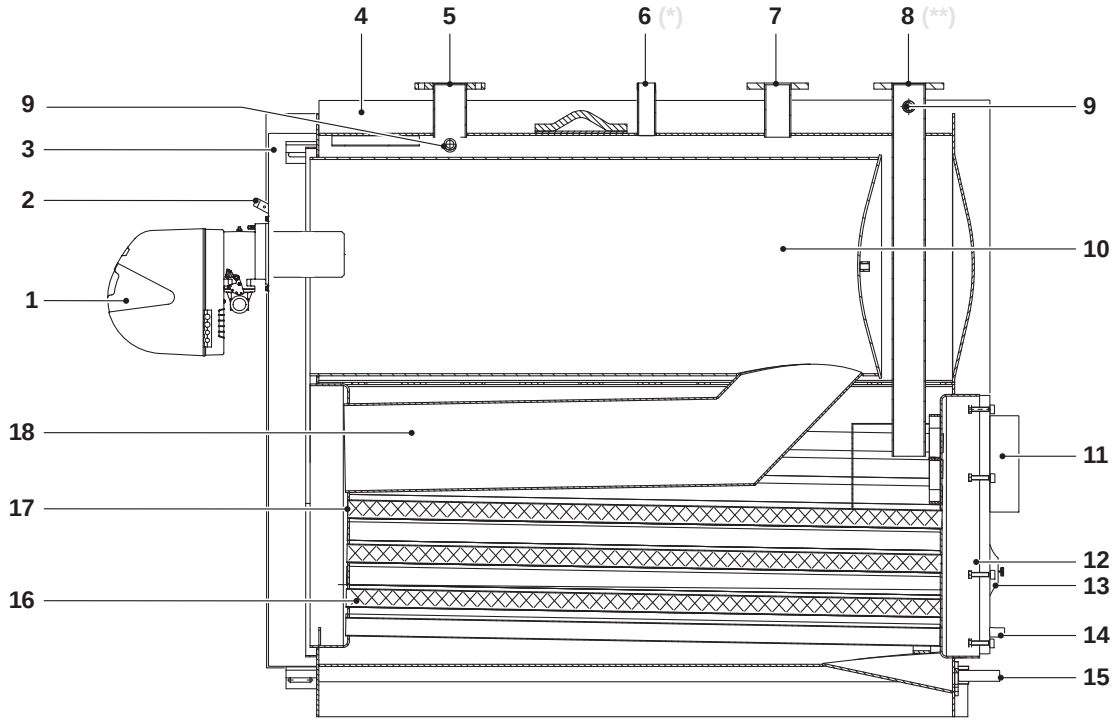

1 Burner
2 Flame inspection window with pressure measurement fitting
3 Door
4 Casing
5 Outlet
6 Safety device fitting
7 Heating return (high temperature)
8 Heating return (low temperature)
9 Instrument bulb/sensor sockets
10 Combustion chamber
11 Flue gas exhaust
12 Flue gas box
13 Inspection window
14 Condensate outlet
15 Boiler drain
16 Turbulators
17 Flue gas pipes
18 Second flue pass

1.7 Burner combination

1.7.1 TAU N OIL with power <400 kW

The burners suggested to obtain the best performance of **RIELLO TAU N OIL** <400 kW boilers are:

BURNERS	BOILER TAU N OIL				
MODEL	115	150	210	270	350
OIL					
BG7.1D	●(R)				
RL 22 BLU		●(R)	●(R)		
RL 32 BLU			●	●(R)	
RL 42 BLU					●(R)

(R) Reference burner used during performance qualification tests to derive the technical data declared.

⚠ See the instruction manual provided with the burner:
- Burner installation
- Electrical connections
- Burner adjustments.

⚠ To assemble/disassemble the burners equipped with recirculation tube, it might be necessary to remove the latter before carrying out such operations (strictly comply with the use and maintenance manual of the burner).

1.7.2 TAU N OIL with power >400 kW

The burners suggested to obtain the best performance of **RIELLO TAU N OIL** >400 kW boilers are:

BURNERS	BOILER TAU N OIL		Burner flange	
MODEL	450	600	as standard	Accessory (required)
OIL				
RL 42 BLU	●			
RL 55/M BLU	●	●		
RL 85/M BLU		●		
RL 85 / M BLU			09430033	4031196 (*)
RL 100 TL			09430033	
RL 100/M TL			09430033	
MIXED OIL/GAS				
RLS 120/M MX TL			09430033	4031196 (*)
RLS 100			09430033	4031196 (*)

(*) To replace on the flange fitted as standard

⚠ See the instruction manual provided with the burner:
- Burner installation
- Electrical connections
- Burner adjustments.

⚠ To assemble/disassemble the burners equipped with recirculation tube, it might be necessary to remove the latter before carrying out such operations (strictly comply with the use and maintenance manual of the burner).

1.7.3 TAU N OIL with power <400 kW - Can run on GAS

The burners suggested to obtain the best performance of **RIELLO TAU N OIL** <400 kW boilers are:

BURNERS	BOILER TAU N OIL				
MODEL	115	150	210	270	350
GAS					
BS 3/M	●(R)	●(R)			
RS 25/M BLU TC FS1			●(R)	●(R)	
RS 35/M BLU TC FS1					●(R)
RS 25/E BLU TC FS1			●	●	
RS 35/E BLU TC FS1					●
RS 45/E BLU TC FS1					●

(R) Reference burner used during performance qualification tests to derive the technical data declared.
NOTE: burners must be fitted with a gas ramp device.

⚠ See the instruction manual provided with the burner:
- Burner installation
- Electrical connections
- Burner adjustments.

⚠ To assemble/disassemble the burners equipped with recirculation tube, it might be necessary to remove the latter before carrying out such operations (strictly comply with the use and maintenance manual of the burner).

1.7.4 TAU N OIL with power <400 kW - Can run on GAS - PREMIX

The premixed burners (PREMIX) recommended to obtain the best possible performance from **RIELLO TAU N OIL** <400 kW boilers are:

BURNERS	BOILER TAU N OIL					ACCESSORIES KIT
MODEL	115	150	210	270	350	FLANGE
GAS - PREMIX						
RX 180 S/PV	●(R)	●(R)				4031894
RX 250 S/PV			●(R)			4031894
RX 360 S/PV				●(R)		20029111
RX 360 S/PV GPL				●		20029111
RX 500 S/PV					●(R)	20029111

(R) Reference burner used during performance qualification tests to derive the technical data declared.
NOTE: burners must be fitted with a gas ramp device.

⚠ See the instruction manual provided with the burner:
- Burner installation
- Electrical connections
- Burner adjustments.

⚠ To assemble/disassemble the burners equipped with recirculation tube, it might be necessary to remove the latter before carrying out such operations (strictly comply with the use and maintenance manual of the burner).

1.7.5 TAU N OIL with power >400 kW - Can run on GAS

The burners suggested to obtain the best performance of **RIELLO TAU N OIL** >400 kW boilers are:

BURNERS	BOILER TAU N OIL		ACCESSORIES KIT	
MODEL	450	600	FLANGE BURNER	HEAD SLIDING
GAS - TWO STAGE				
RS 50 TC	•			
RS 70 TC		•		
RS 100 TC				
RS 130 TC				
RS 190 TC				
GAS - MODULATING				
RS 55/M BLU TC FS1	•		4031196	
RS 68/M BLU T.C.	•	•	4031196	
RS 120/M BLU T.C.D			4031196	
RS 160/M BLU TC FS1			20178775	
RS 55/E BLU TC FS1	•		4031196	
RS 68/E BLU TC FS1	•	•	4031196	
RS 120/E BLU TC FS1			4031196	
RS 160/E BLU TC FS1			20178775	
RS 50/M MZ TC	•			
RS 70/M TC		•		
RS 100/M TC				
RS 130/M TC				
RS 190/M TC				
GAS - PREMIX				
RX 500 S/PV	•			20067543
RX 700 S/PV	•			20106601
RX 850 S/PV		•		20092252
RX 1000 S/PV				20092252
RX 1500 S/E			20178504	

NOTE: burners must be fitted with a gas ramp device.

⚠ See the instruction manual provided with the burner:
- Burner installation
- Electrical connections
- Burner adjustments.

⚠ To assemble/disassemble the burners equipped with recirculation tube, it might be necessary to remove the latter before carrying out such operations (strictly comply with the use and maintenance manual of the burner).

1.7.6 Important notes for fitting the burner

Before fixing the burner to the boiler, make sure that:
- The door opens the right way (see the relevant sections for details on how to reverse the door)
- The length (L) of the burner fixing bolts is less than (S), i.e. the total depth of the seal, plates and washer. **Longer bolts can cause the door to warp, compromising its ability to seal the boiler hermetically and permitting the release of combustion fumes.**

To ensure correct burner installation, also refer to the burner's own manual.

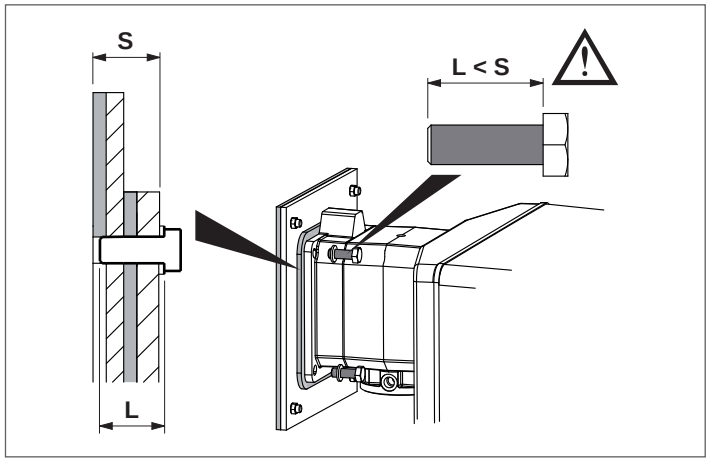

If you are installing a new boiler but re-using an old burner, always perform the following checks:
- Make sure that the performance of the old burner is adequate for the requirements of the boiler
- Make sure that the length and diameter of the burner nozzle are as specified in the following table.

⚠ When you finish installing the burner in the boiler, fill the gap between the burner's blast tube and the refractory material in the door with the ceramic insulation (A) supplied with the boiler.

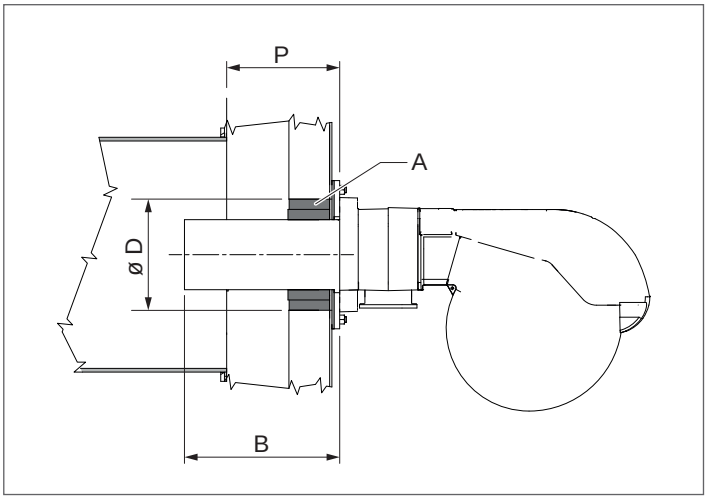

			BOILER TAU N OIL				
			115	150	210	270	
B	Burner head	min	110	110	160	160	mm
D	Door hole diameter		162	162	162	180	ø mm
P	Door thickness		114	114	114	124	mm

			BOILER TAU N OIL			
			350	450	600	
B	Burner head	min	160	160	160	mm
D	Door hole diameter		210	270	270	ø mm
P	Door thickness		124	145	145	mm

⛔ The use of burners with a head length shorter than the depth (P) of the inspection door is prohibited.

1.7.7 Burner plate

RIELLO TAU N OIL boilers are equipped as standard with drilled burner plates for housing the recommended burners. The table below shows the characteristics of the holes.

	BOILER TAU N OIL			
	115	150	210	270
ø (mm)	130	130	160	165
A (mm)	120	120	130	158
Threads	M8	M8	M8	M8

	BOILER TAU N OIL		
	350	450	600
ø (mm)	185	185	205
A (mm)	195	195	195
Threads	M12	M12	M12

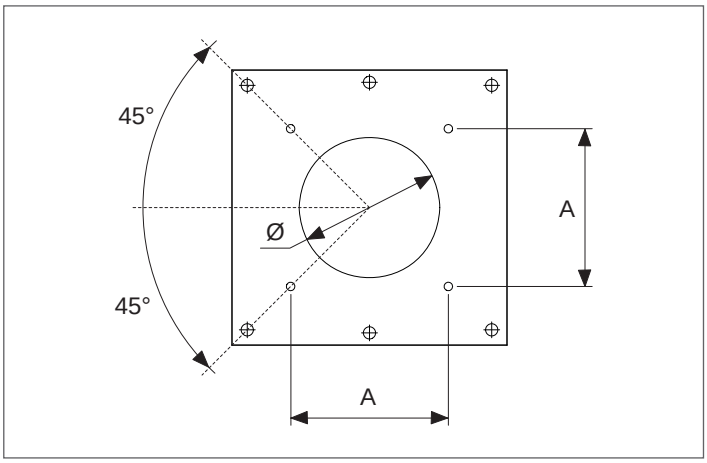

1.8 Technical specifications

1.8.1 Technical data in conjunction with diesel burners <400kW

DESCRIPTION		BOILER TAU N OIL					
		115	150	210	270	350	
Device type		Condensing boiler for central heating					
		B23					
Fuel		Low-sulphur fuel oil (< 50ppm)					
Device category		See Burner					
Max. nominal thermal capacity (Q max)	NCV	115	150	210	270	350	kW
	GCV	125	159	223	286	371	
Min. nominal thermal capacity (Q min)	NCV	80	111	151	211	271	kW
	GCV	85	118	160	224	287	
Useful (rated) heat output		112	146	205	264	343	kW
Rated useful heat output (80/60°C) P4	max	112.2	146.4	205.2	264.3	343.7	kW
Nominal useful output (80/60°C) (Pn min)	min	78.4	108.2	147.5	207.2	266.4	kW
Rated maximum useful heat output (50/30°C)		119.6	156	218.2	280.3	361.9	kW
30% heat output with return at 30°C (P1)		33.7	43.9	61.6	79.3	103.1	kW
Seasonal energy efficiency ηs		94	93	94	94	94	%
Efficiency at nominal thermal capacity and high temperature operation η4 (80/60°C)	NCV	97,6	97,6	97,7	97,9	98,2	%
	GCV	92	92	92,1	92,3	92,6	
Efficiency at 30% nominal thermal capacity η1 with 30°C return	NCV	104,8	104,7	104,6	104,4	104,1	%
	GCV	98,8	98,7	98,6	98,4	98,1	
Useful efficiency at Pn min (80/60°C)	NCV	98,0	97,5	97,7	98,2	98,3	%
	GCV	88,3	87,8	88,0	88,5	88,6	
Useful efficiency at Max Pn (50/30°C)	NCV	104,0	104,0	103,9	103,8	103,4	%
	GCV	98,1	98,1	98,0	97,9	97,5	
Losses from stack for sensible heat (Qmax)		1.7	1.7	1.7	1.5	1.5	%
Losses from casing with burner on		0.3	0.3	0.3	0.5	1	%
Constant pressure drop		300	300	420	540	700	W
Flue gas temperature		< 45÷75 (*)					°C
Emissions at max. heat input Nox (0% O_2)		<120 (**)					mg/kWh
Emissions at heat input CO		<10					mg/kWh
Flue gas mass flow rate (Qmax)		0.05	0.07	0.09	0.12	0.15	kg/sec
Furnace pressure		2.2	2	2.7	3.2	4.6	mbar
Furnace volume		172	172	172	241	279	dm^3
Tot. volume of flue gas side		246	272	292	413	482	dm^3
Heat exchange surface area		7	8.2	10.4	13	16.3	m^2
Volumetric heat load (Qmax) (NCV)		669	872	1221	1120	1254	kW/m^3
Specific heat load (NCV)		16	18	20	21	21	kW/m^2
Maximum condensate production		11	18.4	27.4	31.9	40.9	l/h
Maximum working pressure		6					bar
Maximum permitted temperature		110					°C
Maximum operating temperature		95					°C
Pressure drops	ΔT 10°C	50	43.2	36	54	46.4	mbar
	ΔT 20°C	12.5	11.3	10.2	16.3	13.4	
Water capacity		375	360	323	495	555	l
Consumption at full load (Elmax)		470	650	650	800	800	W
Consumption at part load (Elmin)		141	195	195	240	240	W
Electrical consumption in standby mode (PSB)		20	20	20	20	20	W

NCV Net calorific value of fuel
GCV Gross calorific value of fuel
(*) Depends on return temperature (30-60°C).
(**) Value according to EN267 (nitrogen content in light oil =140mg/kg).

⚠ The stack must guarantee the minimum draught specified by applicable technical standards, assuming zero pressure at the connection to the flue.

⚠ Values obtained in conjunction with oil burners **RIELLO** calibrated with CO_2 = 12,5%

⚠ WARNING: If coupled with low NOx emission diesel burners compliant with the 2018 ErP Directive, the generators are able to operate with nitrogen oxide emissions below the limits required by said Directive.

1.8.2 Technical data in conjunction with diesel burners >400kW

DESCRIPTION		BOILER TAU N OIL 450	BOILER TAU N OIL 600	
Device type		Condensing boiler for central heating		
		B23		
Fuel		Low-sulphur fuel oil (< 50ppm)		
Device category		See Burner		
Max. nominal thermal capacity (Q max)	NCV	450	600	kW
	GCV	477	636	
Min. nominal thermal capacity (Q min)	NCV	351	451	kW
	GCV	372	478	
Useful (rated) heat output		442	589	kW
Rated useful heat output (80/60°C) P4	max	441,9	589,2	kW
Nominal useful output (80/60°C) (Pn min)	min	345,0	443,3	kW
Rated maximum useful heat output (50/30°C)		465,3	620,4	kW
30% heat output with return at 30°C (P1)		132,6	176,8	kW
Efficiency at nominal thermal capacity and high temperature operation η4 (80/60°C)	NCV	98,2	98,2	%
	GCV	92,6	92,6	
Efficiency at 30% nominal thermal capacity η1 with 30°C return	NCV	104,1	104,1	%
	GCV	98,1	98,1	
Useful efficiency at Pn min (80/60°C)	NCV	98,3	98,3	%
	GCV	92,7	92,7	
Useful efficiency at Max Pn (50/30°C)	NCV	103,4	103,4	%
	GCV	97,5	97,5	
Losses from stack for sensible heat (Qmax)		1,9		%
Losses from casing with burner on		0,6		%
Constant pressure drop		<0,2		%
Flue gas temperature		< 45÷75 (*)		°C
Emissions at max. heat input Nox (0% O_2)		<120 (**)		mg/kWh
Emissions at max. heat input CO		<10		mg/kWh
Flue gas mass flow rate (Qmax)		0,20	0,26	kg/sec
Furnace pressure		5,0	5,5	mbar
Furnace volume		442	496	dm^3
Tot. volume of flue gas side		737	860	dm^3
Heat exchange surface area		21,8	28,8	m^2
Volumetric heat load (Qmax) (NCV)		1018	1210	kW/m^3
Specific heat load (NCV)		20,6	20,8	kW/m^2
Maximum condensate production		52,2	73,8	l/h
Maximum working pressure		6		bar
Maximum permitted temperature		110		°C
Maximum operating temperature		95		°C
Pressure drops	ΔT 10°C	33,8	30,2	mbar
	ΔT 20°C	9,0	8,5	
Water capacity		743	770	l

NCV Net calorific value of fuel
GCV Gross calorific value of fuel
(*) Depends on return temperature (30-60°C).
(**) Value according to EN267 (nitrogen content in light oil =140mg/kg).

⚠ The stack must guarantee the minimum draught specified by applicable technical standards, assuming zero pressure at the connection to the flue.

⚠ Values obtained in conjunction with oil burners **RIELLO** calibrated with CO_2 = 12,5%

1.8.3 Technical data in conjunction with gas burners <400kW

DESCRIPTION		BOILER TAU N OIL					
		115	150	210	270	350	
Device type		Condensing boiler for central heating					
		B23					
Fuel		All gas fuels					
Device category		See Burner					
Max. nominal thermal capacity (Q max)	NCV	115	150	210	270	349	kW
	GCV	127,6	166,5	233,1	299,7	388,5	
Min. nominal thermal capacity (Q min)	NCV	80	111	151	211	271	kW
	GCV	88,8	123,2	167,6	234,2	300,8	
Useful (rated) heat output		112	147	205	264	344	kW
Rated useful heat output (80/60°C) P4	max	112,4	146,6	205,2	264,3	342,7	kW
Nominal useful output (80/60°C) (Pn min)	min	78,4	108,2	147,5	207,2	266,4	kW
Rated maximum useful heat output (50/30°C)		123,1	159,8	223,7	290,3	375,2	kW
30% heat output with return at 30°C (P1)		33,7	44,0	61,6	79,3	101,1	kW
Seasonal energy efficiency ηs		92	92	93	93	93	%
Efficiency at nominal thermal capacity and high temperature operation η4 (80/60°C)	NCV	97,7	97,7	97,7	97,9	98,2	%
	GCV	88,0	88,0	88,0	88,2	88,5	
Efficiency at 30% nominal thermal capacity η1 with 30°C return	NCV	108,3	108,5	109,3	109,2	108,7	%
	GCV	97,6	97,7	98,5	98,4	97,9	
Useful efficiency at Pn min (80/60°C)	NCV	98	97,5	97,7	98,2	98,3	%
	GCV	88,3	87,8	88,0	88,5	88,6	
Useful efficiency at Max Pn (50/30°C)	NCV	107	106,5	106,5	107,5	107,5	%
	GCV	96,3	95,9	95,9	96,8	96,8	
Losses from stack for sensible heat (Qmax)		1,7	1,7	1,7	1,5	1,5	%
Losses from casing with burner on		0,3	0,3	0,3	0,5	1,0	%
Constant pressure drop		300	300	420	540	700	W
Flue gas temperature		< 45÷75 (*)					°C
Emissions at max. heat input Nox (PCS 0% O_2)		< 56					mg/kWh
Emissions at max. heat input CO		< 10					mg/kWh
Flue gas mass flow rate (Qmax)		0,05	0,07	0,09	0,12	0,15	kg/sec
Furnace pressure		2,2	2,0	2,7	3,2	4,6	mbar
Furnace volume		172	172	172	241	279	dm^3
Tot. volume of flue gas side		246	272	292	413	482	dm^3
Heat exchange surface area		7,0	8,2	10,4	13,0	16,3	m^2
Volumetric heat load (Qmax) (NCV)		669	872	1221	1120	1254	kW/m^3
Specific heat load (NCV)		16,2	18	19,9	20,4	20,9	kW/m^2
Maximum condensate production		11,0	18,4	27,4	31,9	40,9	l/h
Maximum working pressure		6					bar
Maximum permitted temperature		110					°C
Maximum operating temperature		95					°C
Pressure drops	ΔT 10°C	50	43,2	36,0	54,0	46,4	mbar
	ΔT 20°C	12,5	11,3	10,2	16,3	13,4	
Water capacity		375	360	323	495	555	l
Consumption at full load (Elmax)		440	650	650	800	800	W
Consumption at part load (Elmin)		132	195	195	240	240	W
Electrical consumption in standby mode (PSB)		20	20	20	20	20	W

NCV Net calorific value of fuel
GCV Gross calorific value of fuel
(*) Depends on return temperature (30-60°C).

⚠ The stack must guarantee the minimum draught specified by applicable technical standards, assuming zero pressure at the connection to the flue.

⚠ Values obtained with gas burners **RIELLO** calibrated with CO_2 = 9,7% and λ = 1,2.

⚠ WARNING: If coupled with low NOx emission gas burners compliant with the 2018 ErP Directive, the generators are able to operate with nitrogen oxide emissions below the limits required by said Directive.

1.8.4 Technical data in conjunction with gas burners <400kW – PREMIX

DESCRIPTION		BOILER TAU N OIL					
		115	150	210	270	350	
Device type		Condensing boiler for central heating					
		B23 – B23P(*)					
Fuel		All gas fuels					
Device category		See Burner					
Max. nominal thermal capacity (Q max)	NCV	115	150	210	270	349	kW
	GCV	127,6	166,5	233,1	299,7	388,5	
Min. nominal thermal capacity (Q min)	NCV	80	111	151	211	271	kW
	GCV	88,8	123,2	167,6	234,2	300,8	
Useful (rated) heat output		112	147	205	264	344	kW
Rated useful heat output (80/60°C) P4	max	112,4	146,6	205,2	264,3	342,7	kW
Nominal useful output (80/60°C) (Pn min)	min	78,4	108,2	147,5	207,2	266,4	kW
Rated maximum useful heat output (50/30°C)		123,1	159,8	223,7	290,3	375,2	kW
30% heat output with return at 30°C (P1)		33,7	44,0	61,6	79,3	101,1	kW
Seasonal energy efficiency ηs		92	92	93	93	93	%
Efficiency at nominal thermal capacity and high temperature operation η4 (80/60°C)	NCV	97,7	97,7	97,7	97,9	98,2	%
	GCV	88,0	88,0	88,0	88,2	88,5	
Efficiency at 30% nominal thermal capacity η1 with 30°C return	NCV	108,3	108,5	109,3	109,2	108,7	%
	GCV	97,6	97,7	98,5	98,4	97,9	
Useful efficiency at Pn min (80/60°C)	NCV	98,0	97,5	97,7	98,2	98,3	%
	GCV	88,3	87,8	88,0	88,5	88,6	
Useful efficiency at Max Pn (50/30°C)	NCV	107	106,5	106,5	107,5	107,5	%
	GCV	96,3	95,9	95,9	96,8	96,8	
Losses from stack for sensible heat (Qmax)		1,7	1,7	1,7	1,5	1,5	%
Losses from casing with burner on		0,3	0,3	0,3	0,5	1,0	%
Constant pressure drop		300	300	420	540	700	W
Flue gas temperature		< 45÷75 (**)					°C
Emissions at max. heat input Nox (PCS 0% O_2)		< 56					mg/kWh
Emissions at max. heat input CO		<10					mg/kWh
Flue gas mass flow rate (Qmax)		0,05	0,07	0,09	0,12	0,15	kg/sec
Furnace pressure		2,2	2,0	2,7	3,2	4,6	mbar
Furnace volume		172	172	172	241	279	dm^3
Tot. volume of flue gas side		246	272	292	413	482	dm^3
Heat exchange surface area		7,0	8,2	10,4	13,0	16,3	m^2
Volumetric heat load (Qmax) (NCV)		669	872	1221	1120	1254	kW/m^3
Specific heat load (NCV)		16,2	18	19,9	20,4	20,9	kW/m^2
Maximum condensate production		11,0	18,4	27,4	31,9	40,9	l/h
Maximum working pressure		6					bar
Maximum permitted temperature		110					°C
Maximum operating temperature		95					°C
Pressure drops	ΔT 10°C	50	43,2	36,0	54,0	46,4	mbar
	ΔT 20°C	12,5	11,3	10,2	16,3	13,4	
Water capacity		375	360	323	495	555	l
Consumption at full load (Elmax)		530	530	530	530	530	W
Consumption at part load (Elmin)		159	159	159	159	159	W
Electrical consumption in standby mode (PSB)		20	20	20	20	20	W

NCV Net calorific value of fuel
GCV Gross calorific value of fuel
(*) The B23P configuration may only be adopted with premix gas burners.
(**) Depends on return temperature (30–60°C)

⚠ The stack must guarantee the minimum draught specified by applicable technical standards, assuming zero pressure at the connection to the flue.

⚠ Values obtained with gas burners **RIELLO** calibrated with CO_2 = 9,7% and λ = 1,2.

⚠ WARNING: If coupled with low NOx emission gas burners compliant with the 2018 ErP Directive, the generators are able to operate with nitrogen oxide emissions below the limits required by said Directive.

1.8.5 Technical data in conjunction with gas burners >400kW

DESCRIPTION		BOILER TAU N OIL 450	BOILER TAU N OIL 600	
Device type		Condensing boiler for central heating		
		B23 - B23P(*)		
Fuel		All gas fuels		
Device category		See Burner		
Max. nominal thermal capacity (Q max)	NCV	450	600	kW
	GCV	499,5	666,0	
Min. nominal thermal capacity (Q min)	NCV	351	451	kW
	GCV	389,6	500,6	
Useful (rated) heat output		442	589	kW
Rated useful heat output (80/60°C) P4	max	441,9	589,2	kW
Nominal useful output (80/60°C) (Pn min)	min	345,0	443,3	kW
Rated maximum useful heat output (50/30°C)		483,8	645,0	kW
30% heat output with return at 30°C (P1)		132,6	176,8	kW
Efficiency at nominal thermal capacity and high temperature operation η4 (80/60°C)	NCV	98,2	98,2	%
	GCV	88,5	88,5	
Efficiency at 30% nominal thermal capacity η1 with 30°C return	NCV	108,7	108,7	%
	GCV	97,9	97,9	
Useful efficiency at Pn min (80/60°C)	NCV	98,3	98,3	%
	GCV	88,6	88,6	
Useful efficiency at Max Pn (50/30°C)	NCV	107,5	107,5	%
	GCV	96,8	96,8	
Losses from stack for sensible heat (Qmax)		1,9		%
Losses from casing with burner on		0,6		%
Constant pressure drop		<0,2		%
Flue gas temperature		< 45÷75 (**)		°C
Emissions at max. heat input Nox (PCS 0% O_2)		<56		mg/kWh
Emissions at max. heat input CO		<10		mg/kWh
Flue gas mass flow rate (Qmax) (***)		0,20	0,26	kg/sec
Furnace pressure		5,0	5,5	mbar
Furnace volume		442	496	dm^3
Tot. volume of flue gas side		737	860	dm^3
Heat exchange surface area		21,8	28,8	m^2
Volumetric heat load (Qmax) (NCV)		1018	1210	kW/m^3
Specific heat load (NCV)		20,6	20,8	kW/m^2
Maximum condensate production		52,2	73,8	l/h
Maximum working pressure		6		bar
Maximum permitted temperature		110		°C
Maximum operating temperature		95		°C
Pressure drops	ΔT 10°C	33,8	30,2	mbar
	ΔT 20°C	9,0	8,5	
Water capacity		743	770	l

NCV Net calorific value of fuel
GCV Gross calorific value of fuel
(*) The B23P configuration may only be adopted with premix gas burners.
(**) Depends on return temperature (30-60°C)
(***) At Pn max and Tm = 80°C, Tr = 60°C e CO_2 = 10,3%

⚠ The stack must guarantee the minimum draught specified by applicable technical standards, assuming zero pressure at the connection to the flue.

⚠ Values obtained with gas burners **RIELLO** calibrated with CO_2 = 9,7% and λ = 1,2.

2 SYSTEM MANAGER

2.1 Putting into service

Have **RIELLO**'s Technical Assistance Service start up your **RIELLO TAU N OIL** boiler for the first time. Once this has been done, the boiler can be left to function automatically.

Under certain circumstances, such as after long periods of disuse, the service engineer responsible for the boiler may need to re-start it without involving the Technical Assistance Service. To do so, perform the following checks and operations:

- check that the gas cock and heating water cock are open;
- check that the pressure of the hydraulic circuit when cold is always **greater than 1 bar** and less than the maximum limit permitted for the appliance;

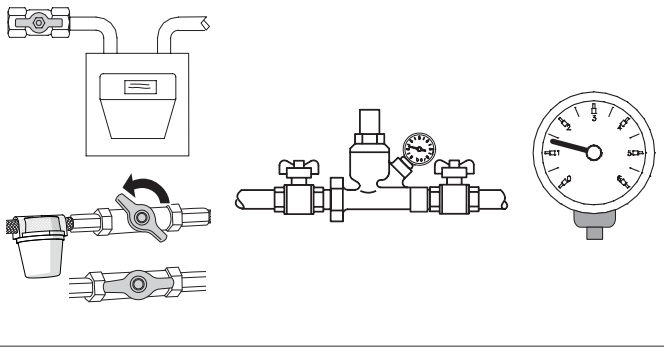

- turn the system's main power switch ON;
- if the system is equipped with a temperature controller or timer thermostat, make sure that it is switched on;



- Turn the control panel power switch ON and make sure that the green power indicator lights;

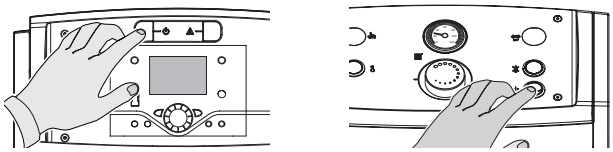

RIELLOtech CLIMA COMFORT
RIELLOtech CLIMA MIX

RIELLOtech PRIME
RIELLOtech PRIME ACS

- make the necessary settings as instructed in the instruction manual for your control panel;

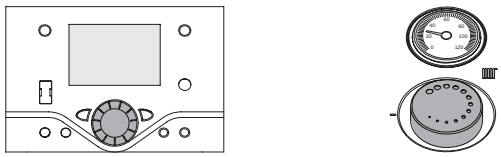

RIELLOtech CLIMA COMFORT
RIELLOtech CLIMA MIX

RIELLOtech PRIME
RIELLOtech PRIME ACS

- adjust the timer thermostat/s or temperature controller to the desired temperature (~20°C).

The burner should now ignite and remain in operation until the set temperature is reached.

Subsequent starts and stops will be made automatically according to the desired temperature without the need for further intervention.

If any ignition faults or malfunctions occur, the burner performs a "LOCKOUT SHUTDOWN". This is shown by the red button light on the burner and by the warning light on the control panel.



RIELLOtech CLIMA COMFORT
RIELLOtech CLIMA MIX

RIELLOtech PRIME
RIELLOtech PRIME ACS

⚠ If a "LOCKOUT SHUTDOWN" occurs, wait about 30 seconds before resetting the burner.

To reset the burner, press the red button light on the burner and wait until the flame ignites.

Repeat this operation 2-3 times at the most. If the problem persists after that, call **RIELLO**'s Technical Assistance Service.

If the problem persists, check that the safety thermostat has not tripped.

⚠ If the safety thermostat trips, the boiler shuts down and a warning is displayed on the control panel (if present).

Proceed as follows to reset the safety thermostat:

- Wait until boiler temperature falls below 80°C;
- Remove the safety thermostat cover;
- Press the manual reset button;
- Wait for the complete ignition cycle to be repeated and for the flame to ignite.

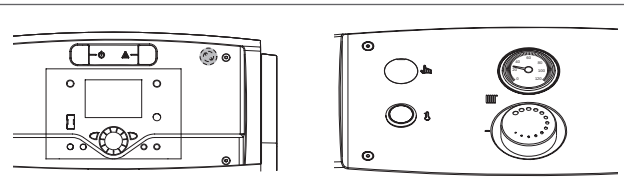

RIELLOtech CLIMA COMFORT
RIELLOtech CLIMA MIX

RIELLOtech PRIME
RIELLOtech PRIME ACS

2.2 Temporary shutdown

If you need to shut down the system for a short period, proceed as follows:

- turn the control panel power switch OFF and make sure that the green power indicator goes out;

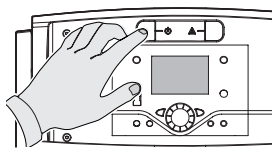

RIELLOtech CLIMA COMFORT
RIELLOtech CLIMA MIX

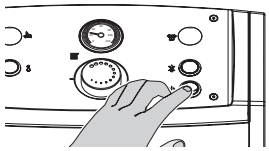

RIELLOtech PRIME
RIELLOtech PRIME ACS

- turn the mains power switch OFF;

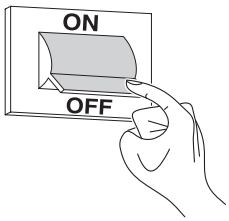

⚠ Do NOT perform this procedure if outdoor temperature falls below ZERO (risk of freezing).

Then proceed as follows:

- make the necessary settings as instructed in the instruction manual for your control panel;

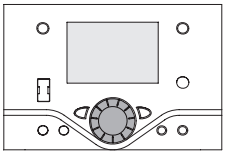

RIELLOtech CLIMA COMFORT
RIELLOtech CLIMA MIX

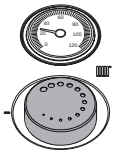

RIELLOtech PRIME
RIELLOtech PRIME ACS

- make sure that the temperature controller or timer / room thermostat is set to "frost protection" mode.

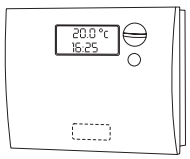

2.3 Preparing for extended periods of disuse

If the boiler is not going to be used for an extended period of time, perform the following operations:

- Turn the control panel power switch OFF and make sure that the green power indicator goes out

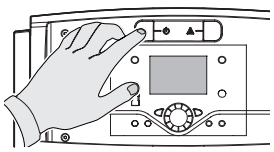

RIELLOtech CLIMA COMFORT
RIELLOtech CLIMA MIX

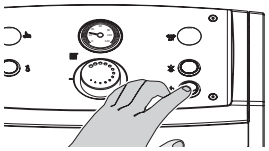

RIELLOtech PRIME
RIELLOtech PRIME ACS

- Turn the main system switch "off"

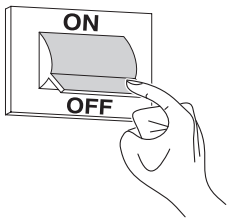

- Close the fuel cock and heating circuit water cock;

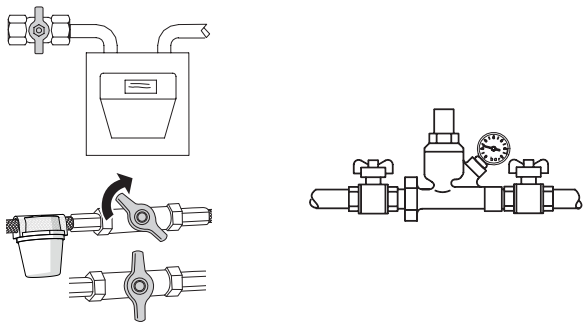

- Drain the central heating circuit if there is any risk of freezing.

⚠ Contact your local **RIELLO** Technical Assistance Service if you encounter any problems in completing the above procedure.

2.4 Cleaning

Use a cloth damped in soapy water to clean the boiler's external casing.
To remove stubborn marks, use a cloth damped in a 50% mix of water and denatured alcohol or a suitable cleaning product.
Carefully dry after cleaning.

⊖ Do not use abrasive cleaning pads or powder detergents.

⊖ Never clean the boiler without first disconnecting it from the mains electricity supply by turning the mains power switch and the control panel switch OFF.

⚠ The combustion chamber and flue pipes must be cleaned periodically by Technical Assistance Service or by a qualified heating engineer (see page 47).

2.5 Maintenance

Please remember that THE PERSON RESPONSIBLE FOR SYSTEM MANAGEMENT MUST ENSURE THAT PROFESSIONALLY QUALIFIED HEATING ENGINEERS UNDERTAKE PERIODIC MAINTENANCE AND COMBUSTION EFFICIENCY MEASUREMENTS.

RIELLO's Technical Assistance Service is qualified to satisfy these legal requirements and can also provide useful information on MAINTENANCE PROGRAMMES designed to guarantee:

- Greater safety
- Compliance with applicable legislation
- Freedom from the risk of fines in the event of spot checks.

Regular maintenance is essential for the safety, efficiency and durability of the boiler.
Servicing is a legal requirement and must be performed at least once a year by a professionally qualified heating engineer.

2.6 Useful information

Seller:.....
Mr.: .....
Address: .....
Tel.:.....

Installer:.....
Mr.: .....
Address: .....
Tel.:.....

Technical Assistance Service: .....
Mr.: .....
Address: .....
Tel.:.....

Date	Work done

Fuel oil supplier: .....
Mr.: .....
Address: .....
Tel.:.....

Date	Quantity supplied	Date	Quantity supplied	Date	Quantity supplied	Date	Quantity supplied

3 INSTALLER

3.1 Unpacking the product

TAU N OIL RIELLO boilers are delivered in **2 separate packages**:

1 **THE BOILER BODY** inside the protective cover (A), includes:
- Burner nozzle protective padding kit (B);
- Condensate discharge siphon (C);
- Exchange pipes cleaning group (brush) (D);
- Document pouch (E) containing:
  - Instruction manual
  - Technical data plate adhesive (to be applied to the panelling when installing the boiler)
  - Hydraulic test certificate
  - Siphon cleaning warning label
  - Conventional warranty conditions

DO NOT START THE BOILER UNTIL THE OPERATIONS INDICATED ON THE RED LABEL ON THE FLAME VIEWER HAVE BEEN CARRIED OUT.

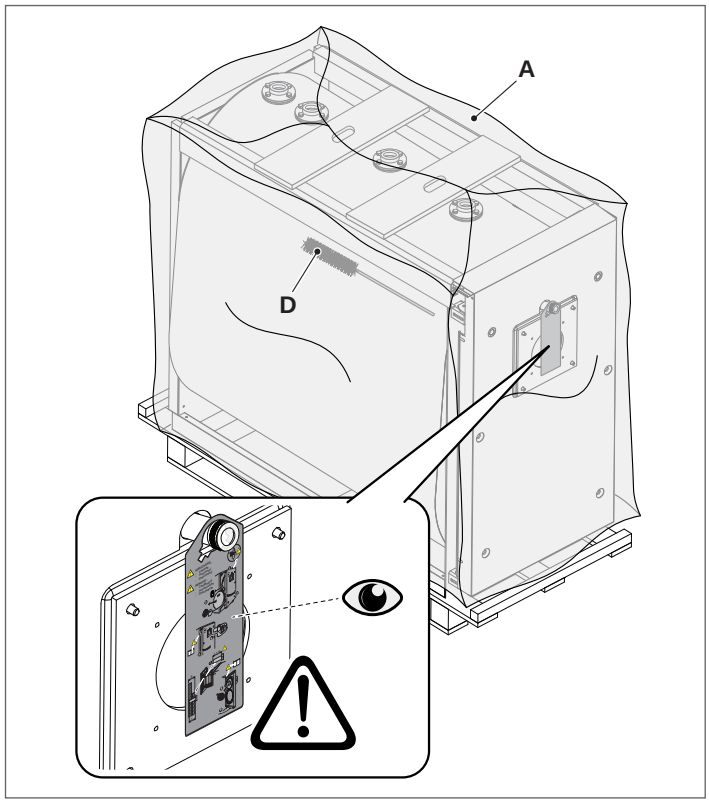

THE INSTRUCTION MANUALS ARE AN INTEGRAL PART OF THE BOILER, THEREFORE WE RECOMMEND TO READ AND KEEP THEM WITH CARE.

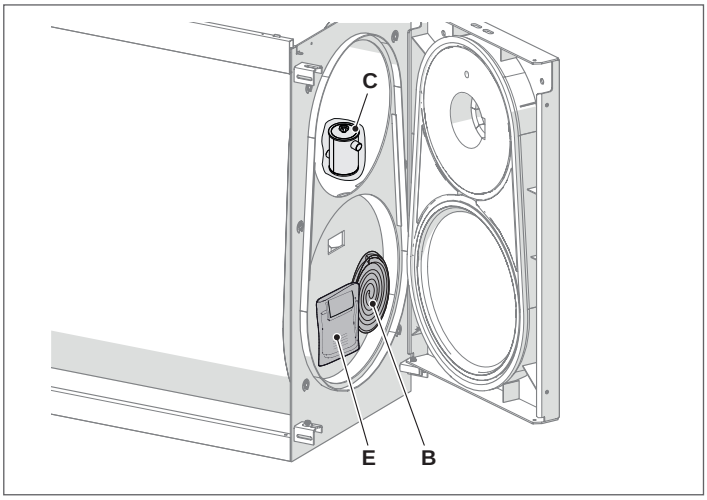

2 **THE PANELLING**, complete with the assembly accessories, inside a protective cardboard box and a wooden crate.

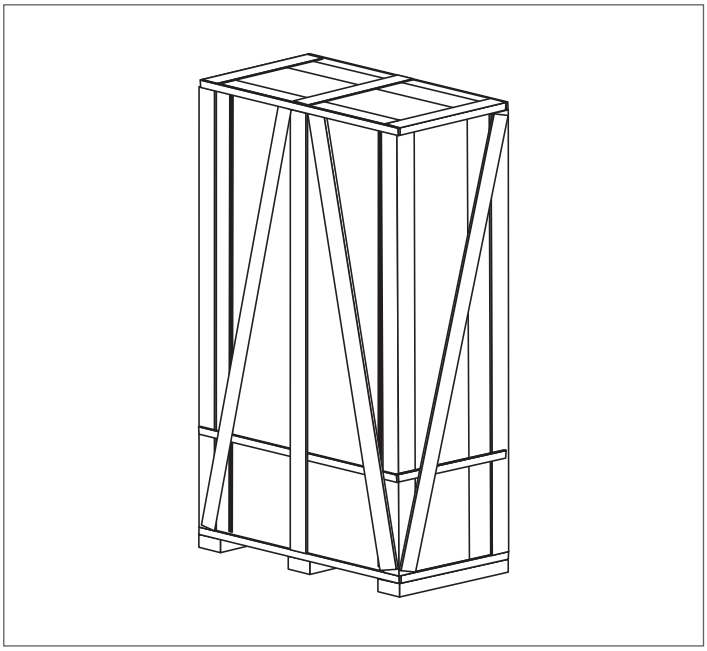

The operation of the **TAU N OIL RIELLO** boilers is conditional on the use of a control panel as indicated in section "Control panels" on page 5.

3.2 Overall dimensions and weights

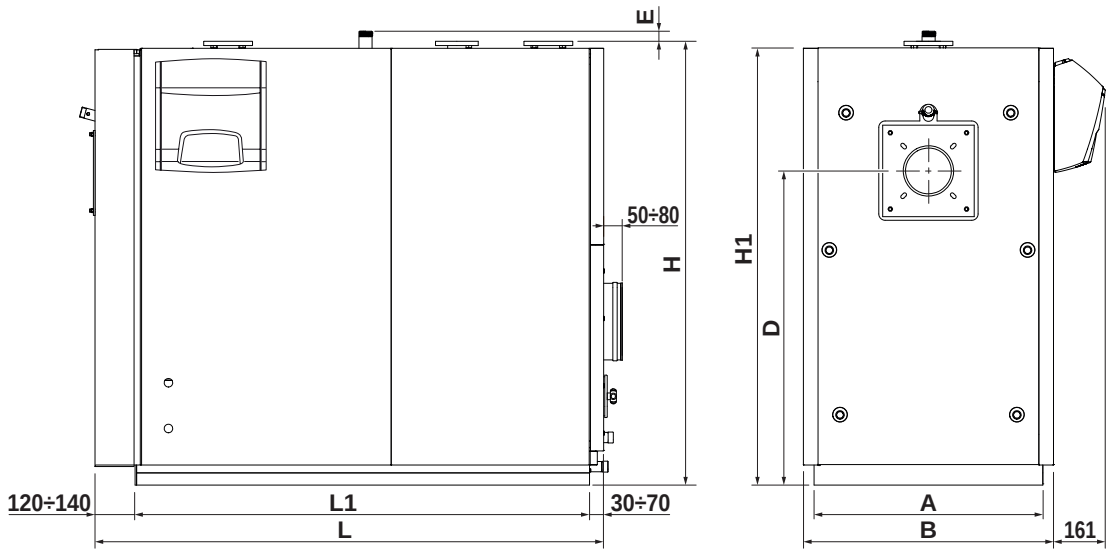

DESCRIPTION		BOILER TAU N OIL							
		115	150	210	270	350	450	600	
A	Base width	690	690	690	750	750	790	790	mm
B	Width	760	760	760	820	820	890	890	mm
L	Length	1455	1455	1455	1655	1855	2035	2235	mm
L1	Base depth	1305	1305	1305	1470	1690	1865	2070	mm
H	Height of water fittings	1315	1340	1340	1455	1455	1695	1695	mm
H1	Boiler height	1300	1315	1315	1435	1435	1680	1680	mm
D	Height of burner plate	925	925	925	1030	1030	1235	1235	mm
E	Safety fitting height	40	40	40	35	35	50	50	mm
Weight of boiler		480	510	530	677	753	1095	1250	kg
Weight of casing		50	50	50	60	70	90	120	kg
Total Boiler Weight (including panelling)		530	560	580	737	823	1185	1370	kg

3.3 Handling

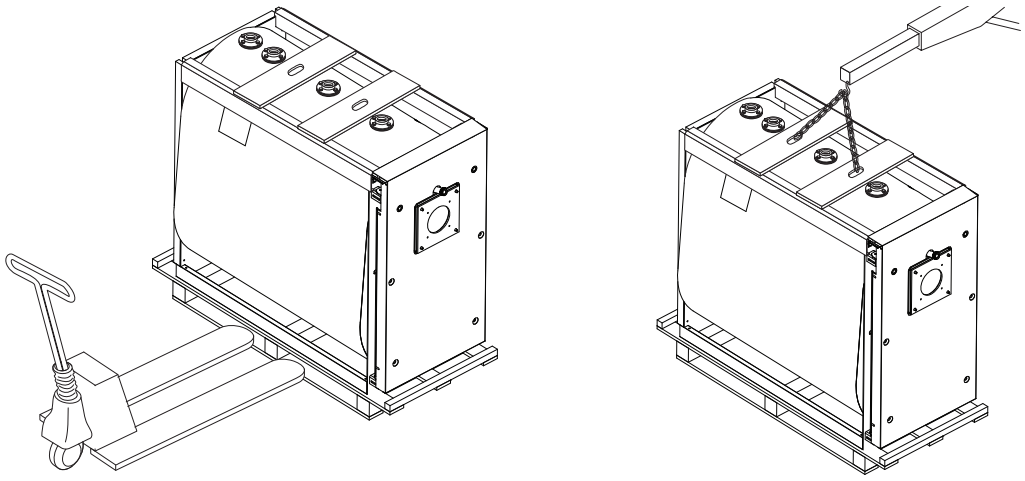

TAU N OIL RIELLO steel boilers are fitted with lifting attachments. Take great care when moving them and only use lifting equipment of adequate capacity.

Remove the transport straps and remove the wooden pallet before positioning the boiler.

⚠ Wear suitable personal protective equipment and use suitable safety devices.

3.4 Installation premises

RIELLO TAU N OIL steel boilers must be installed in a dedicated boiler room, with adequately sized vents, in compliance with applicable laws and standards.
If at all possible, the boiler should be installed on a raised base to stop the burner fan sucking up dust and to facilitate installation of a condensate drain system.
The boiler condensate drain must be located above the height of the lid of the system's condensate neutraliser.

The fuel supply line must be made in such a way as to allow both the removal of the panelling and the opening of the door with the burner mounted.

⚠ For Belgium boilers must be installed according to the NBN D51.003 standard, the NBN B61.001 standard (output > 70 kW).

⚠ When installing the boiler, allow sufficient space around it to access all safety and control devices and to permit easy maintenance.

⚠ If the specific weight of the gas supply to the burner is greater than the specific weight of air, install all electrical parts at least 500 mm above floor level.

⛔ Do not install the boiler outdoors. It is not designed to work outdoors and is not fitted with the necessary automatic anti-frost systems to do so.

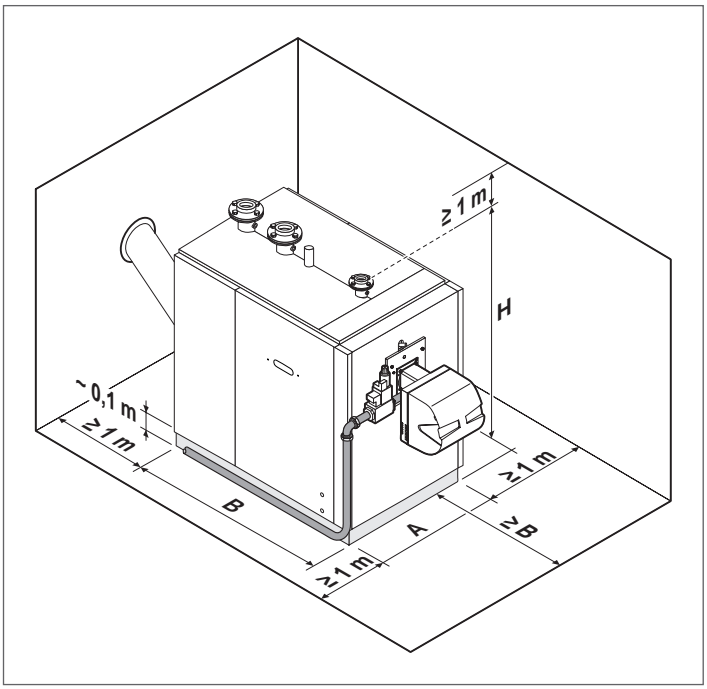

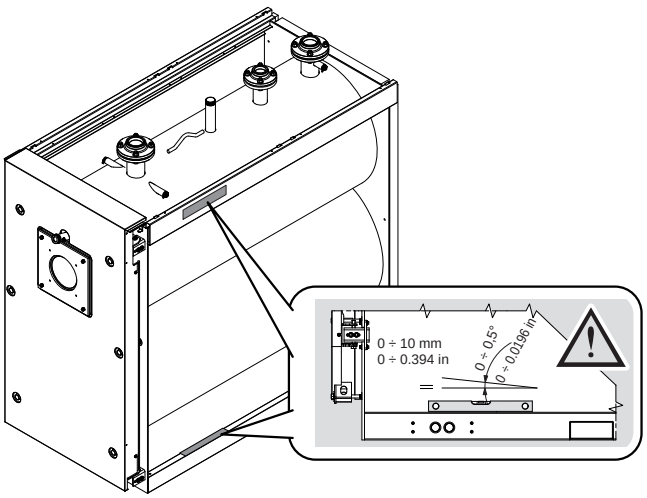

Before positioning the boiler, it is recommended, where feasible, to provide a support base made of concrete or steel, with a height equal to or greater than 100 mm, taking into account the requirements shown in the figure.

⚠ Before installation, verify that there is sufficient space to install the boiler on this support base and to allow full opening of the door with the burner installed.

⚠ The boiler support base must be perfectly level or, preferably, slightly sloped toward the rear of the boiler (condensate drain), as shown on the labels in the figure.

DESCRIPTION		BOILER TAU N OIL							
		115	150	210	270	350	450	600	
A	Width	800	800	800	850	850	900	900	mm
B	Length	1430	1430	1430	1620	1820	2000	2200	mm
H	Overall height (boiler + base) (100 mm)	1440	1440	1440	1555	1555	1795	1795	mm

3.5 Location of sensors

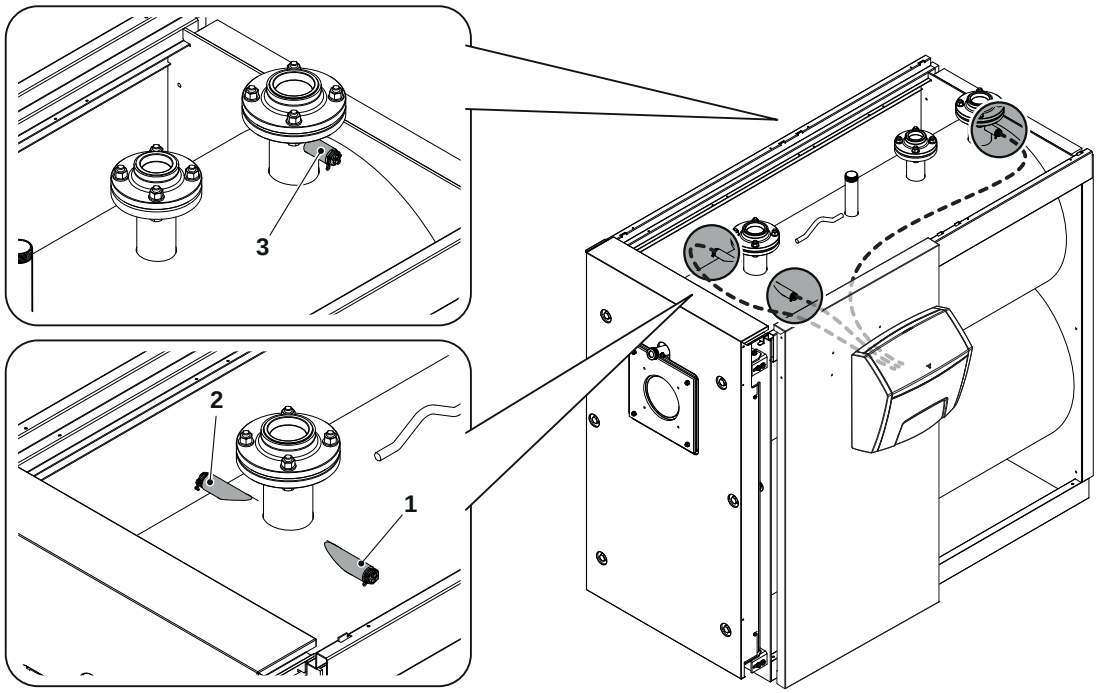

DESCRIPTION		BOILER TAU N OIL						
		115	150	210	270	350	450	600
1	Sheath for outlet operating temperature sensor	G1/2" – 3 Pipes inside Ø7mm L=170mm						
2	Sheath for overheat protection sensor							
3	Sheath for inlet operating temperature sensor	G1/2" – 2 Pipes inside Ø7mm L=100mm						

3.6 Water-side pressure drop

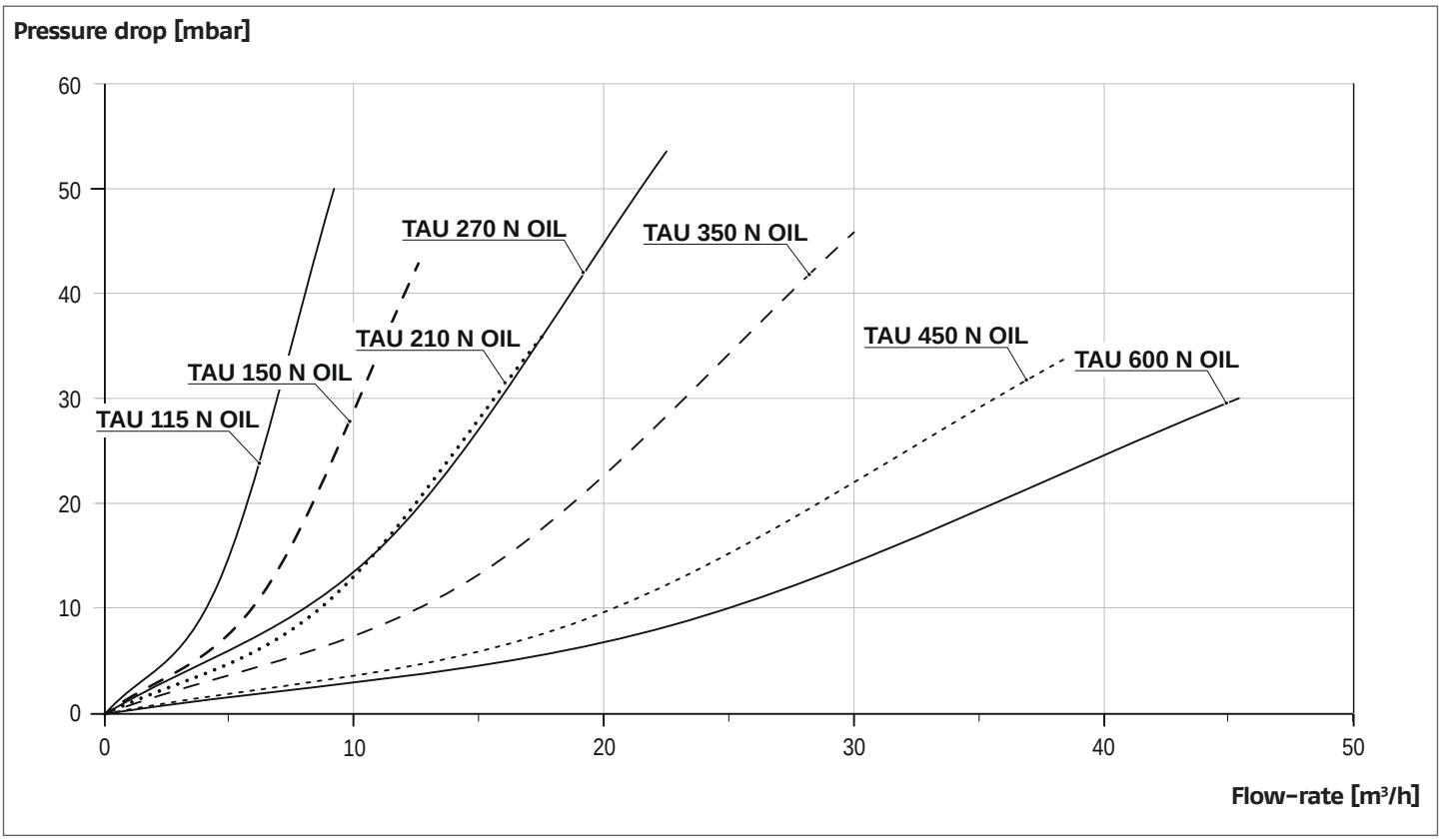

3.7 Water in central heating systems

INTRODUCTION

Water used in central heating systems MUST be suitably treated to ensure the correct functioning of those systems and to guarantee an extended working life for boilers and all other system components. This applies not only to existing systems but to newly installed systems too.
Sludge, lime-scale and pollutants present in the water can cause permanent damage to the heating unit, also within a short time and regardless of the quality standards of the materials used.
Contact the Technical Assistance Service for any further information on type and use of additives.

⚠ Always conform to the standards and legislation applicable in the country of installation.

WATER IN CENTRAL HEATING SYSTEMS.
INSTRUCTIONS FOR THE DESIGN, INSTALLATION AND MANAGEMENT OF CENTRAL HEATING SYSTEMS.

1. Chemical and physical characteristics of water
The chemical and physical characteristics of the water must comply with the standards and table below:

European Standards:
- **EN 14868** Protection of metallic materials against corrosion in closed water circulation systems
- **EN 12953-10** Quality requirements for the supply water and the water in the boiler >100°C

National Standards / Leg Dec:
- **UNI 8065:2019** Water treatment for domestic use

STEEL BOILERS			
	U/M	Initial filling water	Regular service water (*)
pH (with aluminium)		7 - 8	7 - 8,5
pH (without aluminium)		8,3 - 9,5	8,3 - 9,5
Hardness	°F	< 15	< 15
Electrical conductivity	µs/cm		< 500
Chlorides	mg/l		< 50
Oxygen (O_2)	mg/l		< 0,1
Iron (Fe)	mg/l	< 0,5	< 0,5 (**)
Copper (Cu)	mg/l	< 0,1	< 0,1 (**)
Aluminium (Al)	mg/l		< 0,1 (**)
Turbidity		Clear	Clear

(*) system water values after 8 weeks of operation;
(**) higher values are due to corrosion, to be eliminated.

General note on water used to top up systems:
- If softened water is used to top up a system, 8 weeks of functioning after topping up, verify that the water in the system respects the above limits, in particular for electrical conductivity
- This check is not necessary if demineralised water is used to top up the system.

2. Central heating systems

⚠ Do not use automatic filling devices to add water to central heating systems. Use a manual device instead and record top-ups in the system service book.

⚠ If there are more than one boiler, they must all be put into service either contemporarily or with a very low rotation time during the initial period of service, so as to evenly distribute the limited quantity of initial lime-scale.

⚠ A flushing cycle must be programmed after the plant has been installed to flush out any installation debris.

⚠ Water used to fill a system for the first time and water used to top it up must always be filtered (using synthetic or metal mesh filters with a filtration rating of no less than 50 microns) to prevent sludge from forming and triggering deposit corrosion.

⚠ The heating system must be flushed out and cleaned with good workmanship before filling up the existing systems. The boiler may not be filled until after the heating system has been flushed out.

2.1 New central heating systems
The system must be filled up slowly the first time; once it is filled and the air expelled it should never need to be topped up again. Systems should also be operated at maximum working temperature the first time they are started up, in order to facilitate de-aeration. (Gas is not released from the water at low temperatures).

2.2 Reconditioning old central heating systems
If a boiler has to be replaced, do not refill the entire central heating circuit if the quality of water in it conforms to requirements. If the quality of water fails to conform to requirements, either recondition the old water or separate the water circuits (water in the boiler circuit must conform to requirements).

3. Corrosion

3.1 Deposit corrosion
Under-deposit corrosion is an electrochemical process, due to the presence of sand, rust, etc., inside the mass of water. These solid substances generally deposit on the bottom of the boiler (sludge), on tube and pipe heads or in the gaps between pipes and tubes.
Micro-corrosion phenomena may be triggered off owing to the difference in electrochemical potential coming to be created between the material in contact with the impurity and the surrounding one.

3.2 Stray current corrosion
Corrosion from stray currents can occur due to the differing electrical potentials between water in the boiler and the metallic mass of the boiler or piping. This process leaves unmistakeable traces i.e. small regular conical holes.

⚠ All metallic parts should be grounded by an efficient earth cable for this reason.

4. Eliminating air and gas from central heating systems
If oxygen enters a circuit continuously or even intermittently (e.g. in under-floor heating systems whose pipes are not protected by impermeable synthetic sheaths, in circuits with open expansion vessels, or in circuits that require frequent top-ups) always separate the boiler's water circuit from the central heating circuit.

Mistakes to avoid and precautions.
From what we have seen it is therefore important to avoid two factors possibly leading to the above mentioned processes i.e. contact between air and water in the installation and regular topping up with fresh water.
To eliminate contact between air and water (and to prevent the latter from becoming oxidized), it is necessary:

- For the expansion system to be a closed vessel type, correctly scaled and with the correct pre-loading pressure (to be regularly checked)
- For the installation to always be at a higher pressure than that of the atmosphere at any point (comprising the pump suction side) and under all running conditions (all the water sealing and couplings in the installation are designed to resist pressure towards outside, but not for depression)
- That the installation will not be made with materials permeable to gas (e.g. plastic pipes for floor systems without anti-oxygen barrier).

⚠ Lastly we would remind you that the warranty does not cover breakdowns incurred by the boiler due to deposits and corrosion.

3.7.1 Use of antifreeze

Do not use automotive silicate-based antifreeze in the heating system.
In areas where freezing may occur, an antifreeze may be added to protect the system water. Please adhere to the specifications provided by the antifreeze manufacturer.

- Use the antifreeze manufacturer's data to determine the right antifreeze ratio for the desired protection temperature.
- Do not exceed 50% antifreeze mix ratio and do not use antifreezes other than those specifically designed for water heating systems.
- the chemical oxidation of the metals in the system also generates hydrogen.

3.7.2 Glycol

The percentage of propylene glycol which can be used is dependent on the maximum delivery temperature and the project ΔT as defined by the generator.

To calculate the freezing temperature associated with the mix and the maximum percentage to be used, please see the technical datasheet for the product used.

⚠ The values given in the tables refer to the **RIELLO** product.

Anti-freeze effect		
Glycol (%)	Temperature (°C)	Temperature (°F)
55	-40,4	-40,7
50	-32,4	-26,3
45	-26,0	-14,8
40	-21,5	-6,7
35	-17,6	0,3
30	-14,0	6,8
25	-10,7	12,7
20	-7,0	19,4
15	-4,0	24,8
10	-2,0	28,4

Mix boiling point								
P (bar)	Glycol (%)							T (°)
	25	30	35	40	45	50	55	
11,0	186,0	187,0	186,0	188,0	189,0	189,0	189,5	°C
	366,8	368,6	366,8	370,4	372,2	372,2	373,1	°F
10,0	181,5	182,0	182,5	183,0	184,0	185,0	186,5	°C
	358,7	359,6	360,5	361,4	363,2	365,0	367,7	°F
9,0	176,5	177,0	177,5	178,0	179,5	181,0	182,5	°C
	349,7	350,6	351,5	352,4	355,1	357,8	360,5	°F
8,0	171,5	172,0	172,5	173,0	174,0	175,0	176,0	°C
	340,7	341,6	342,5	343,4	345,2	347,0	348,8	°F
7,0	166,0	166,5	167,0	167,5	168,0	168,5	170,0	°C
	330,8	331,7	332,6	333,5	334,4	335,3	338,0	°F
6,0	159,0	159,5	160,5	161,0	161,5	162,0	163,5	°C
	318,2	319,1	320,9	321,8	322,7	323,6	326,3	°F
5,0	152,5	153,0	154,0	155,0	156,0	157,0	158,0	°C
	306,5	307,4	309,2	311,0	312,8	314,6	316,4	°F
4,0	144,5	145,0	145,5	146,0	147,0	148,0	149,0	°C
	292,1	293,0	293,9	294,8	296,6	298,4	300,2	°F
3,5	141,5	142,0	142,5	143,0	143,5	144,0	145,0	°C
	286,7	287,6	288,5	289,4	290,3	291,2	293,0	°F
2,0	122,5	123,0	123,5	124,0	125,0	126,0	127,0	°C
	252,5	253,4	254,3	255,2	257,0	258,8	260,6	°F
1,0	100,5	101,0	101,5	102,0	103,0	104,0	105,0	°C
	212,9	213,8	214,7	215,6	217,4	219,2	221,0	°F

IMPORTANT INFORMATION REGARDING HEAT-TRANSFER FLUIDS
Heat-transfer fluids are particularly important for protecting the system: efficient heat exchange, thanks to a good specific heat capacity; anti-freeze properties, important for the life of the system in the winter; and anti-corrosion properties to preserve the heating system components.

When choosing a heat-transfer fluid, consider the following:
- **toxicity** in the event of leakage, contaminating domestic water or water for animal/human use/contact
- **biodegradability** in the event of leakage into the environment

All heat-transfer fluids recommended by **RIELLO** are non-toxic and in large part biodegradable.

⚠ Choose the liquid carefully and manage the heating system correctly to keep monitoring and maintenance work to a minimum, and reduce fluid changes.

⚠ Use propylene glycol-based, non-polluting antifreeze concentrate with corrosion inhibitors for heating systems.

⚠ Do not use the mixture with other antifreeze liquids; always use the same one.

⚠ Use chemically non-hazardous liquid.

⚠ It is mandatory to check the percentage of glycol according to the antifreeze effect on the data sheet of the purchased product.

⚠ It is recommended to check the compatibility of the purchased product with the circuit sealing materials, e.g. elastomers or plastics.

⚠ It is recommended to use a filter on the primary circuit to purify the Propylene Glycol.

⚠ The system must not have any galvanised tanks or pipes on the primary side, as zinc can be dissolved by mixtures of propylene glycol and water.

3.8 Water connections

RIELLO TAU N OIL boilers are designed and made for use in central heating installations, but can also be used for domestic hot water production if connected to a suitable storage cylinder. Water fittings are as specified in the following table.

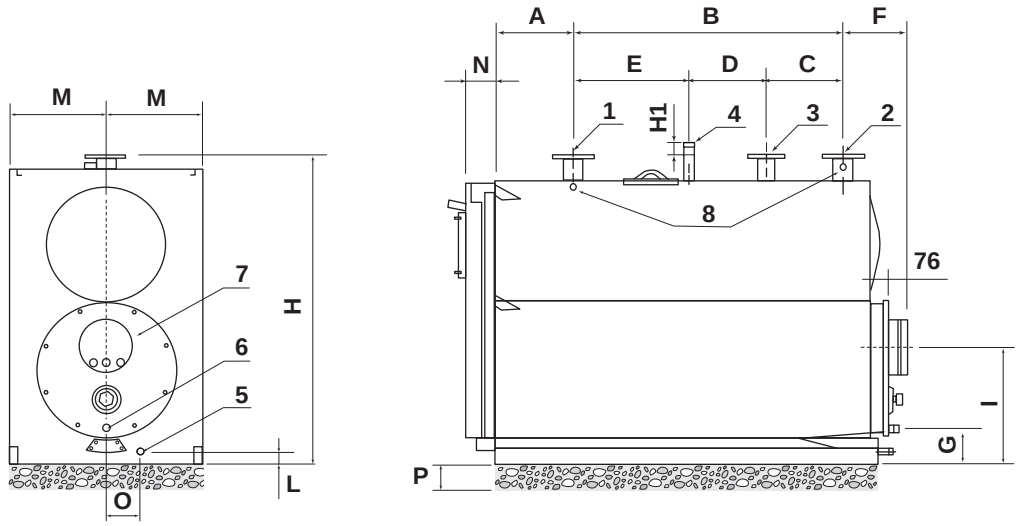

⚠ The choice of system components and the method of their installation are left up to the installer. Installers must use their expertise to ensure proper installation and functioning in compliance with all applicable legislation.

⚠ Circuits filled with anti-freeze must be fitted with water disconnectors.

DESCRIPTION		BOILER TAU N OIL							
		115	150	210	270	350	450	600	
1	System Delivery (*)	65	65	65	65	80	100	100	DN
2	Return 1° (Low Temperature) (*)	65	65	65	65	80	100	100	DN
3	Return 2° (High Temperature) (*)	50	50	50	50	65	80	80	DN
4	Safety device fitting	1" 1/4	1" 1/4	1" 1/4	1" 1/4	1" 1/4	1" 1/2	1" 1/2	Ø - DN
5	Boiler drain fitting	1"	1"	1"	1"	1"	1"	1"	Ø
6	Condensate drain fitting	1"	1"	1"	1"	1"	1" 1/4	1" 1/4	Ø - DN
7	Flue gas exhaust fitting	160	200	200	250	250	300	300	Ø mm
8	Bulbs Sheath / Detection Sensors	3 x 1/2"	3 x 1/2"	3 x 1/2"	3 x 1/2"	3 x 1/2"	3 x 1/2"	3 x 1/2"	n° x Ø
A	Head Distance / Outlet	300	300	300	300	315	311	311	mm
B	Delivery Distance / Return 1°	885	885	885	1050	1235	1400	1600	mm
C	Return Distance 1° / 2°	200	200	200	300	250	250	300	mm
D	Return Distance 2° / Safety Fitting	285	285	285	300	450	600	700	mm
E	Delivery Distance / Safety Fitting	400	400	400	450	535	550	600	mm
F	Return Distance 1° / Flue gas exhaust	200	200	200	242	242	270	270	mm
G	Height of condensate drain	150	150	150	156	156	215	215	mm
H	Height of boiler flanges	1340	1340	1340	1455	1455	1695	1695	mm
H1	Safety Fitting Height	40	40	40	35	35	50	50	mm
I	Height of flue gas outlet	515	515	515	535	535	635	635	mm
L	Height of boiler drain fitting	60	60	60	60	60	82	82	mm
M	Boiler centreline	345	345	345	375	375	395	395	mm
N	Head Distance / Door	110	110	110	120	120	125	125	mm
O	Distance from Boiler drain fitting	132	132	132	137	137	125	125	mm
P	Plinth	100							mm

(*) All flanged connections are PN6 according to EN 1092-1.

3.8.1 Schematic diagram

Direct systems

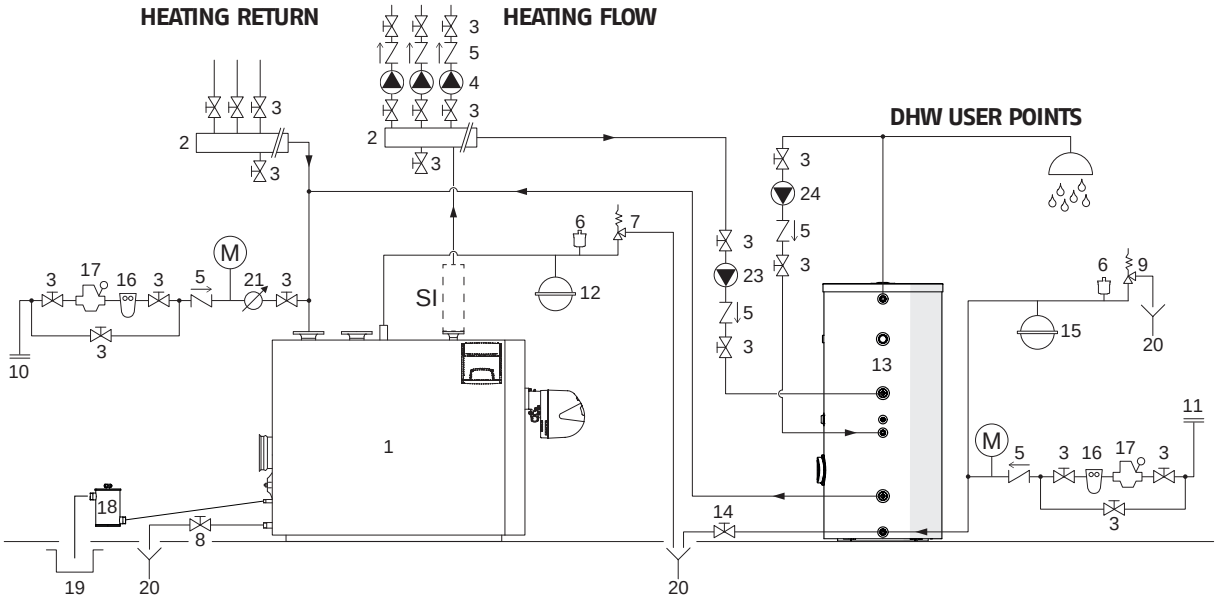

1 Boiler **RIELLO TAU N OIL**
2 Central heating system manifolds
3 Disconnect valves
4 System pumps
5 Non-return valves
6 Automatic vent valve
7 Boiler safety valve
8 Boiler drain cock
9 Storage cylinder safety valve
10 System filling cock
11 Boiler filling
12 CH expansion vessel
13 Remote controlled water tank
14 Storage cylinder drain cock
15 DHW expansion vessel
16 Water softener filter
17 Pressure reducer
18 Siphon
19 Condensate outlet
20 Drain
21 Water supply/top-up counter
22 Mixer valve
23 DHW circulator
24 DHW circulation pump

SI System safety kit (install according to local regulations)
M Pressure gauge
(*) AT= High Temperature BT= Low Temperature

⚠ Domestic hot water and central heating circuits must be completed with expansion vessels of adequate capacity and suitable, correctly-sized safety valves. The discharge of safety valves and appliances must be connected to a suitable collection and disposal system (see Catalogue for compatible accessories).

⚠ The selection and the installation of the components of the system is the responsibility of the installer, who must operate in accordance with good practice and current Legislation.

⚠ Circuits filled with anti-freeze must be fitted with water disconnectors.

⚠ Special supply/reintegration water should be conditioned with appropriate treatment systems. The values stated in the table on page 25 can be used as a reference.

⛔ It is prohibited to operate the thermal module without water.

Direct and mixed systems

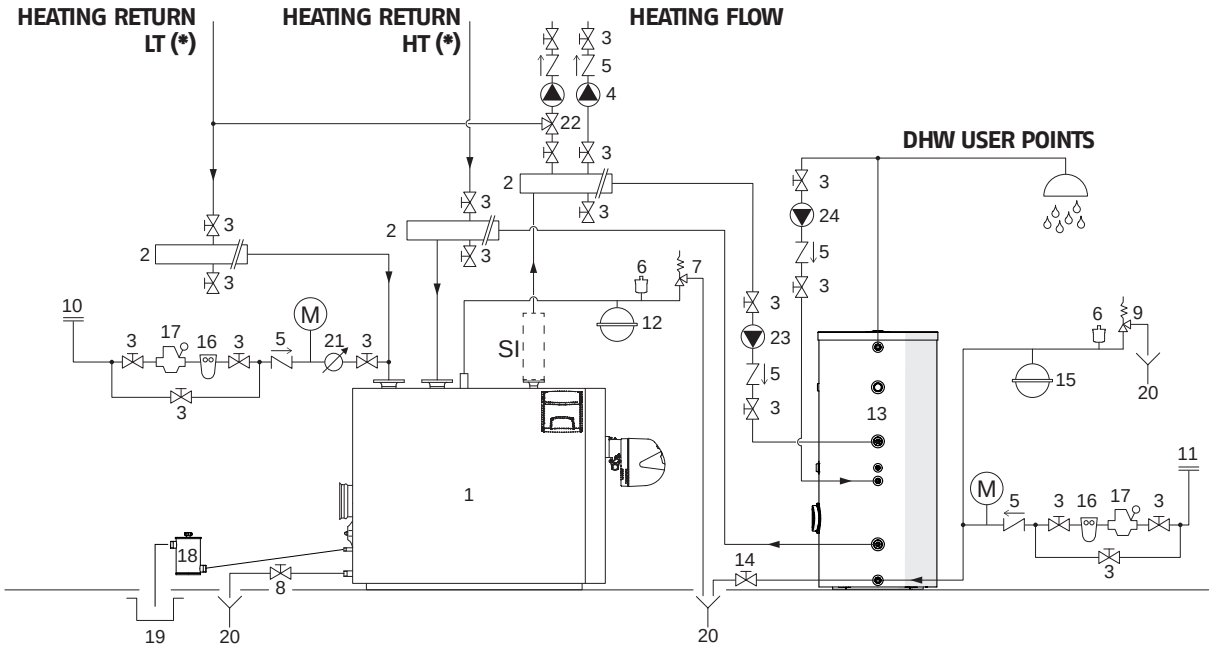

1 Boiler **RIELLO TAU N OIL**
2 Central heating system manifolds
3 Disconnect valves
4 System pumps
5 Non-return valves
6 Automatic vent valve
7 Boiler safety valve
8 Boiler drain cock
9 Storage cylinder safety valve
10 System filling cock
11 Boiler filling
12 CH expansion vessel
13 Remote controlled water tank
14 Storage cylinder drain cock
15 DHW expansion vessel
16 Water softener filter
17 Pressure reducer
18 Siphon
19 Condensate outlet
20 Drain
21 Water supply/top-up counter
22 Mixer valve
23 DHW circulator
24 DHW circulation pump

SI System safety kit (install according to local regulations)
M Pressure gauge
(*) AT= High Temperature BT= Low Temperature

⚠ Domestic hot water and central heating circuits must be completed with expansion vessels of adequate capacity and suitable, correctly-sized safety valves. The discharge of safety valves and appliances must be connected to a suitable collection and disposal system (see Catalogue for compatible accessories).

⚠ The selection and the installation of the components of the system is the responsibility of the installer, who must operate in accordance with good practice and current Legislation.

⚠ Circuits filled with anti-freeze must be fitted with water disconnectors.

⚠ Special supply/reintegration water should be conditioned with appropriate treatment systems. The values stated in the table on page 25 can be used as a reference.

⛔ It is prohibited to operate the thermal module without water.

3.9 Condensate evacuation

TAU N OIL condensing boilers produce a flow of condensate that varies according to operating conditions. The maximum hourly production of condensate is shown in the technical specifications table for each individual model.
The condensate outlet must be sized according to this value and at no point must the diameter be less than the diameter of the boiler condensate discharge (7).

In order to avoid the release of combustion products in the thermal room, it is necessary to insert the trap supplied with the boiler in the condensation drain path. The connecting pipes between the boiler, siphon and waste water drain pit must be laid at a minimum down slope of 3° and must be installed in such a way as to prevent any build-up of.

The siphon is equipped with a tapping point (G 1/8") which a pipe can be connected to, to equalise the pressure between the siphon and the exhaust flue.

The siphon is available in two sizes:
- 1" connectors for <400kW boilers
- 11/4" connectors for >400kW boilers

⚠ Check and clean the condensation drain line on a yearly basis.

⚠ The connection to the waste water drain pit must be made in compliance with national and local legislation and standards.

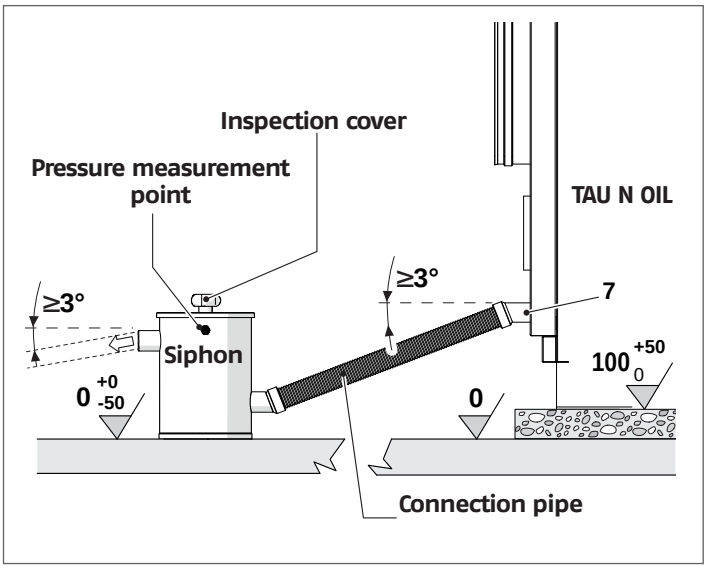

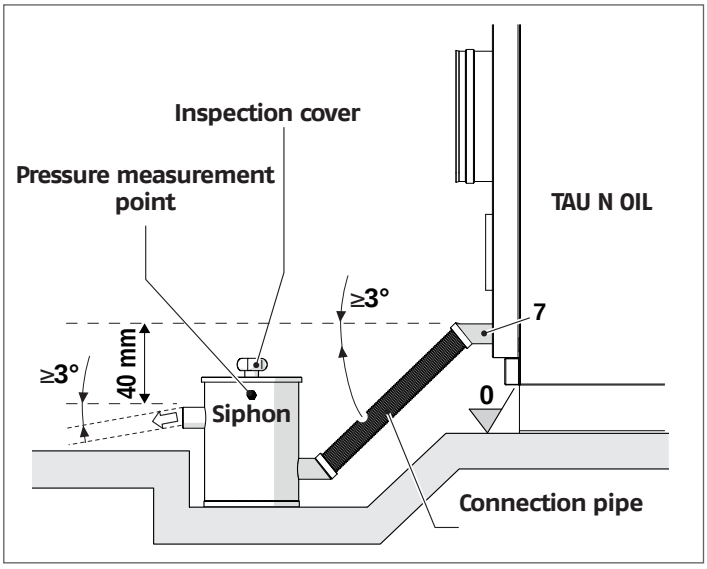

⚠ Before commissioning, fill the siphon with water up to level "L" in line with the top fitting.

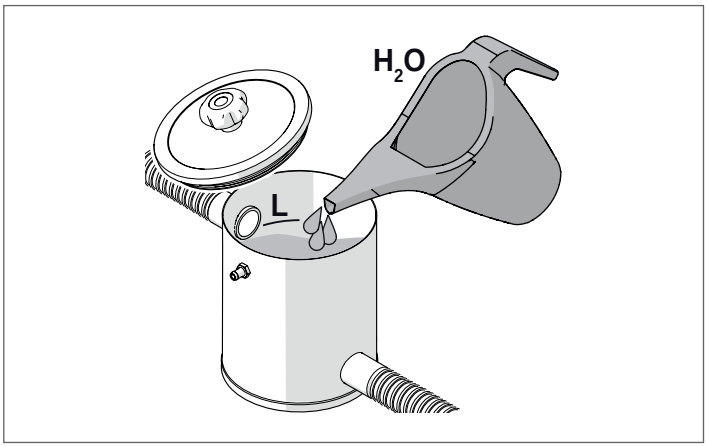

Apply the label supplied with the siphon so that it is visible and legible.

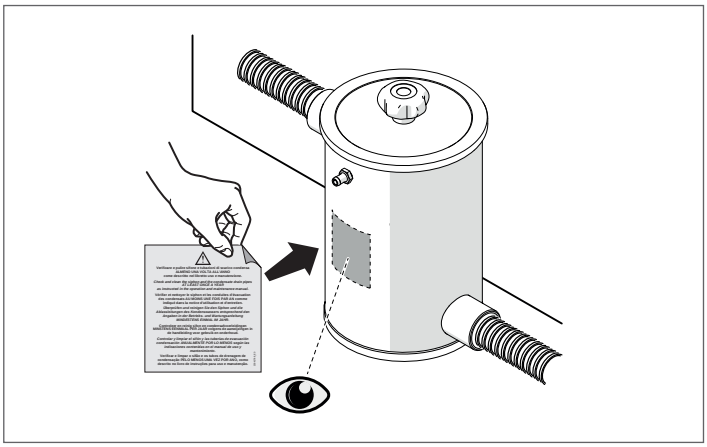

3.10 Neutralising the condensate

3.10.1 Kit for **GAS** fired TAU N OIL boilers

NEUTRALISATION KIT N2-N3
N2-N3 neutralisation units are designed for systems with boiler condensate drain pits located at a lower level than the boiler condensate drain fitting. These neutralisation units do not require any electrical connections.

Type	N2	N3
Maximum flow rate of neutralised condensation (litres/hour)	54	180
Dimension (mm)	420x300x240	640x400x240
Q.ty of granulate	25 kg	50 kg
Fitting Ø	1"	1" 1/2

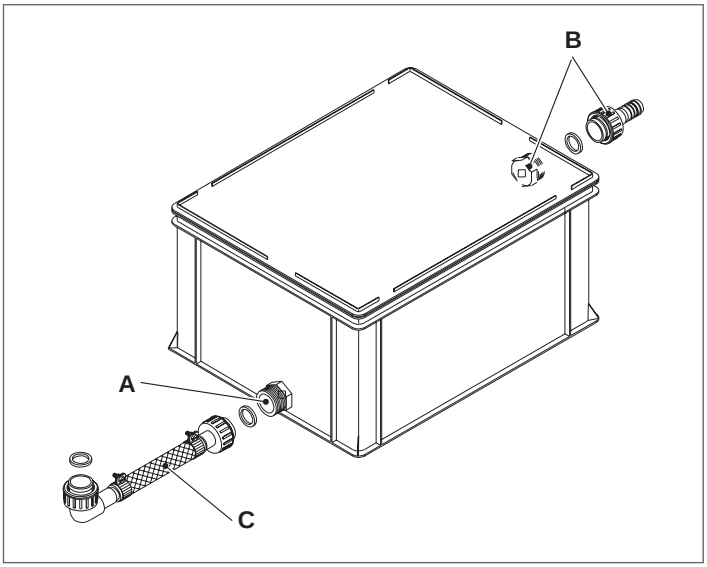

The inlet fitting (A) of the neutralisation unit (the lower fitting) must be connected to the boiler condensate drain fitting using the flexible hose (C) supplied. This condensate drain hose is specially made to prevent combustion fumes escaping into the atmosphere.

The outlet fitting (B) of the neutralisation unit (the top fitting) must be connected to the boiler room's waste water drain pit using another section of flexible hose (not supplied).

⚠ The boiler room's condensate drain pit must be located at a lower level than the fitting (B) on the neutralisation unit.

⚠ The connection pipes used must be as short and straight as possible and corrosion-resistant. Any curves or sharp bends can lead to the hoses becoming clogged and can therefore prevent proper condensate discharge.

If it is necessary to neutralise condensation produced in the chimney, we recommend to connect the condensation drains of boiler and chimney using a tee connector and then get them to the neutraliser inlet.

⚠ Make sure that you tighten the hose clamps sufficiently.

NEUTRALISATION UNIT TYPES HN2-HN3 (with pump)
HN2 and NH3 neutralisation units are designed for systems with boiler condensate drain pits at a higher level than the boiler condensate drain fitting.
The maximum head that the pump can overcome consists of its maximum head minus the resistance of the drain pipe. The pump is controlled by an electrical level switch.
Refer to the instructions provided to connect these neutralisation units up electrically. The protection rating of electrical connections is IP54.

Type	HN2	HN3
Consumption (W)	40	45
Power supply (V~Hz)	230 ~ 50	230 ~ 50
Maximum flow rate of neutralised condensation (litres/hour)	34	90
Dimensions (mm)	420x300x290	640x400x320
Quantity of granulate (kg)	25	50
Circulator maximum head (m)	6	4
Fitting Ø	1" - 5/8"	1" 1/2 - 5/8"

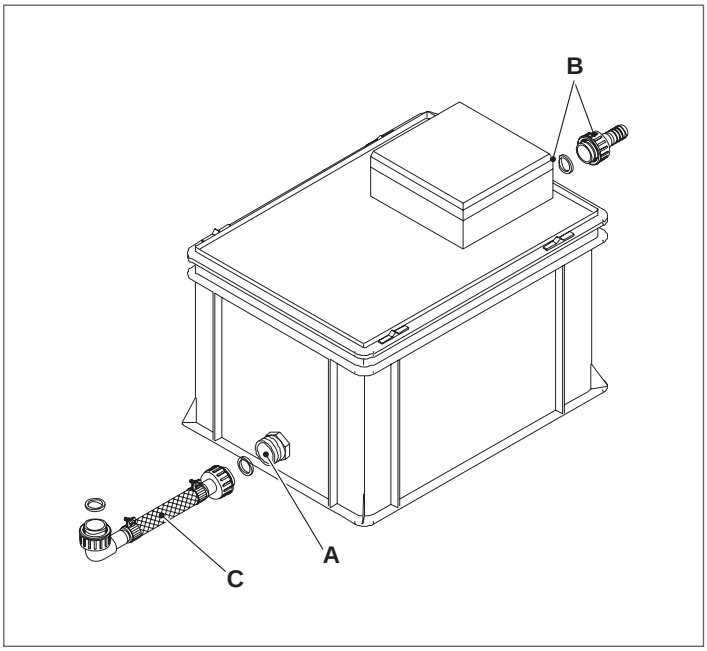

The inlet fitting (A) of the neutralisation unit (the lower fitting) must be connected to the boiler condensate drain fitting using the flexible hose (C) supplied. This condensate drain hose is specially made to prevent combustion fumes escaping into the atmosphere.

The outlet fitting (B) of the neutralisation unit (the top fitting) must be connected to the boiler room's waste water drain pit using another section of flexible hose (not supplied).

⚠ The connection pipes used must be as short and straight as possible and corrosion-resistant. Any curves or sharp bends can lead to the hoses becoming clogged and can therefore prevent proper condensate discharge.

If it is necessary to neutralise condensation produced in the chimney, we recommend to connect the condensation drains of boiler and chimney using a tee connector and then get them to the neutraliser inlet.

⚠ Make sure that you tighten the hose clamps sufficiently.

⚠ Hoses should also be fixed to the floor and suitably protected whenever possible.

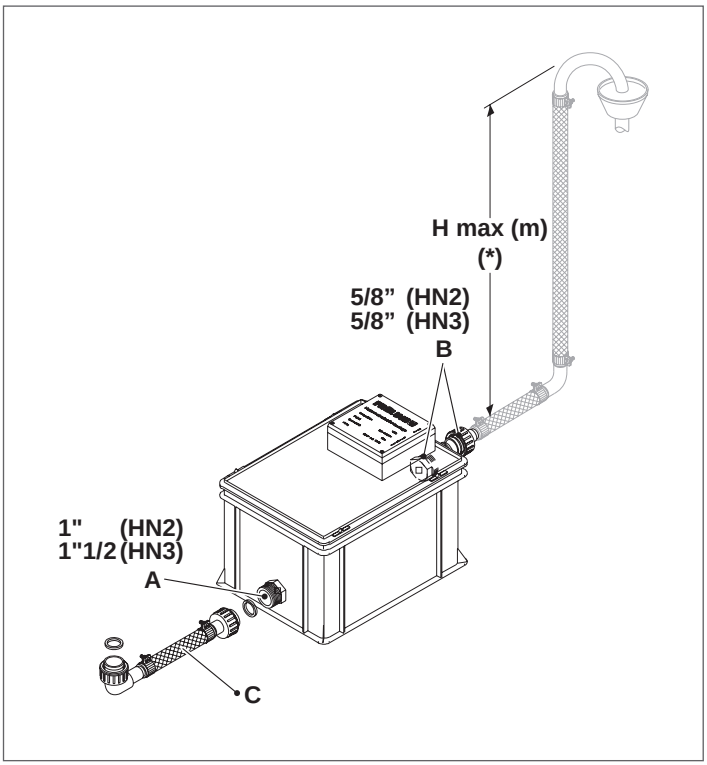

(*) The maximum head that the pump can overcome consists of its maximum head minus the resistance of the drain pipe.

3.10.2 Kit for **DIESEL** fired TAU N OIL boilers

The **DNO 1**, **DNO 2**, **DNO 3**, **HNO 1.6** and **HNO 3** neutraliser kits are available for neutralising the condensate.

NEUTRALISATION KIT DNO 1 – DNO 2 – DNO 3
DNO 1 – DNO 2 – DNO 3 neutralisers are designed for systems where the boiler room condensate drain point is located BELOW the boiler condensate outlet. This neutraliser does not require any electrical connections to be made.

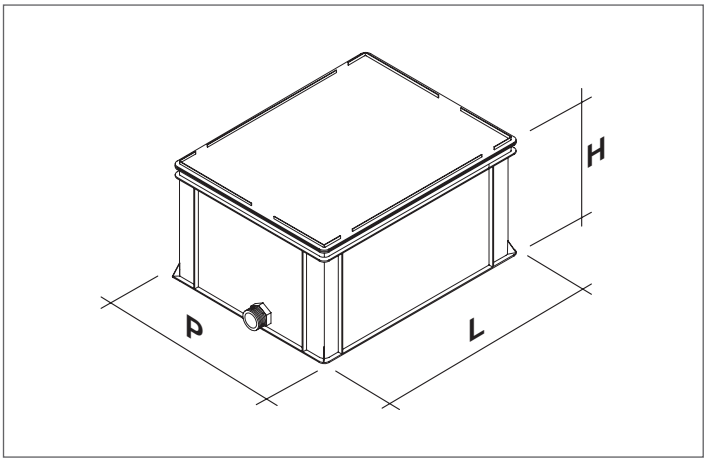

Description	DNO 1	DNO 2	DNO 3	
L – Width	330	420	640	mm
H – Height	230	240	240	mm
P – Depth	200	300	400	mm
Outlet hoses	G 1	G 1	G 1	inch
Drain hose	G 1	G 1	G 1	inch

Technical specifications

TYPE	DNO 1	DNO 2	DNO 3	
Quantity of activated carbon (approx.)	0,3	0,3	0,3	kg
Minimum granule quantity (approx.)	5	10	22	kg
Maximum granule consumption when filled (approx.).	7	15	38	kg
Maximum granule filling quantity (approx.)	11	25	60	kg
Max. hours at full load (approx.)	5500	2100	1600	hours
Maximum volumetric flow rate of condensate	4	24	80	l/h
Heat output of associated boiler	Up to 50	Up to 300	Up to 1000	kW

⚠ The installer is responsible for choosing the most suitable neutraliser, according to the appliance characteristics and the type of system.

NEUTRALISATION KIT HNO 1.6 – HNO 3
HNO 1.6 – HNO 3 neutralisers are designed for systems where the boiler room condensate drain point is located ABOVE the boiler condensate outlet. This neutraliser requires electrical connections to be made.

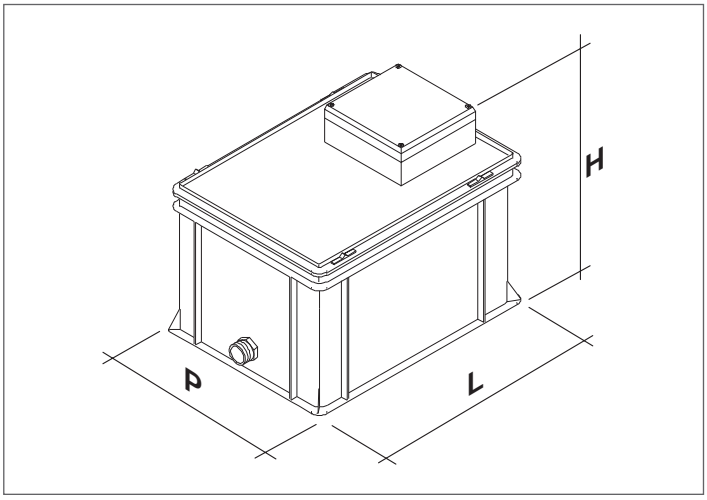

Description	HNO 1.6	HNO 3	
L – Width	640	940	mm
H – Height	240	340	mm
P – Depth	400	400	mm
Outlet hoses	G 1	G 1	inch
Drain hose	G 1	G 5/8	inch

Technical specifications

TYPE	HNO 1.6	HNO 3	
Quantity of activated carbon (approx.)	0,3	0,3	kg
Minimum granule quantity (approx.)	11	22	kg
Maximum granule consumption when filled (approx.).	16	38	kg
Maximum granule filling quantity (approx.)	27	60	kg
Max. hours at full load (approx.)	3200	1600	hours
Maximum volumetric flow rate of condensate	16	110	l/h
Heat output of associated boiler	Up to 200	Up to 1000	kW

⚠ The installer is responsible for choosing the most suitable neutraliser, according to the appliance characteristics and the type of system.

3.11 Discharge of combustion products

The flue gas exhaust and stack connection must be made in compliance with applicable laws and standards, using heat resistant, condensate resistant and stress resistant rigid pipe and sealed joints.
The stack must be fitted with a condensate trap and drain and the flue gas exhaust pipe must be installed at a slope of at least 3° towards the boiler.

DIMENSIONS (mm)		BOILER TAU N OIL							
		115	150	210	270	350	450	600	
H	Height of flue gas outlet	515	515	515	535	535	635	635	mm
Ø i	Diameter of flue gas fitting	160	200	200	250	250	300	300	mm

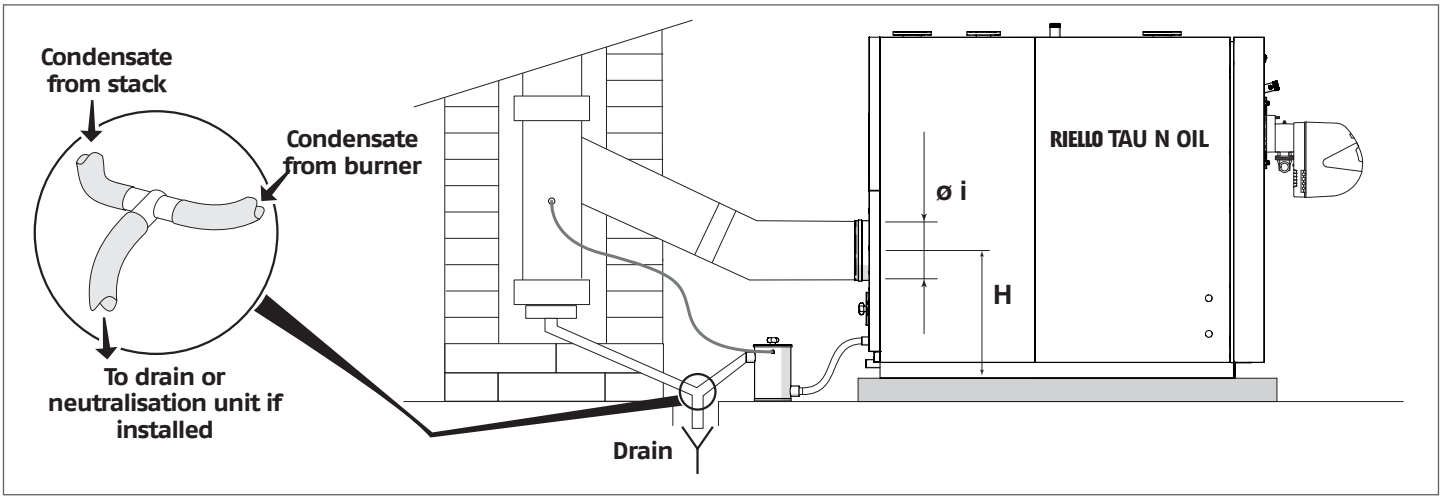

⚠ The stack must guarantee the minimum draught specified by applicable technical standards, assuming zero pressure at the connection to the flue gas exhaust.

⚠ Inadequate or badly dimensioned stacks and flues can increase combustion noise and affect combustion parameters

⚠ Joints must be sealed using suitable materials (e.g. filler, mastic or silicon based sealant).

⚠ Uninsulated flues are potentially dangerous and can cause burns.

⚠ If plastic flue gas outlet ducts are used, install an O-ring safety thermostat set to 90°C. Install the thermostat on the flue gas outlet, with the distance from the boiler body outlet equal to the diameter of the flue gas outlet itself.

⚠ Use flue gas exhaust systems with temperature class 140°C or above.

⚠ When more than one boiler is installed in the boiler room, it is recommended to use separate flue-gas stacks for each boiler.

⚠ For each boiler used, the horizontal exhaust duct must be connected to the vertical one using the 45° connectors.

3.12 Installation of Premixed Gas Burners for flue-gas stack configuration in B23P

⚠ The B23P configuration may only be adopted with premix gas burners. The table below specifies maximum permissible flue back-pressure. Make sure that flue pipes are of a suitable class for the values specified in the table.

BOILER model	PREMIXED BURNER model	Flue exhaust tube maximum pressure (*) (Pa)	Boiler noise (**) (db(A))
TAU 115 N OIL	RX 150 S/PV	150	68
TAU 150 N OIL	RX 180 S/PV	150	68
TAU 210 N OIL	RX 250 S/PV	150	68
TAU 270 N OIL	RX 360 S/PV	150	69
TAU 350 N OIL	RX 500 S/PV	180	67
TAU 450 N OIL	RX 500 S/PV	180 (***)	74 (***)
	RX 700 S/PV	150	74
TAU 600 N OIL	RX 850 S/PV	180	74

(*) With B23P exhaust configuration (only with RX Series premix burners).
(**) Noise level measured as continuous sound pressure weighted according to scale A, at 1 metre from the appliance.
(***) The values indicated are valid only in working conditions with $CO2 \geq 9.2$ % and at less than 300 metres above sea level.

3.13 Door hinges

The boilers are pre-fitted with three hinges so that the direction of opening of the door can be rapidly reversed.
Once you have checked that the default direction of opening is as required, or have reversed the direction of opening as instructed in the 'Changing the direction of door opening' section, remove the spare hinge assembly 'B' (screw, bushing and washer) opposite the pivot side of the door.

Two different door hinging systems have been used to satisfy varying constructional requirements:

System A
(on the smaller sizes) - comes with a bracket and two hinge fixing nuts.

System B
(on the larger sizes) - comes with a hinge fixing plate, a nut and an internal compression spring.

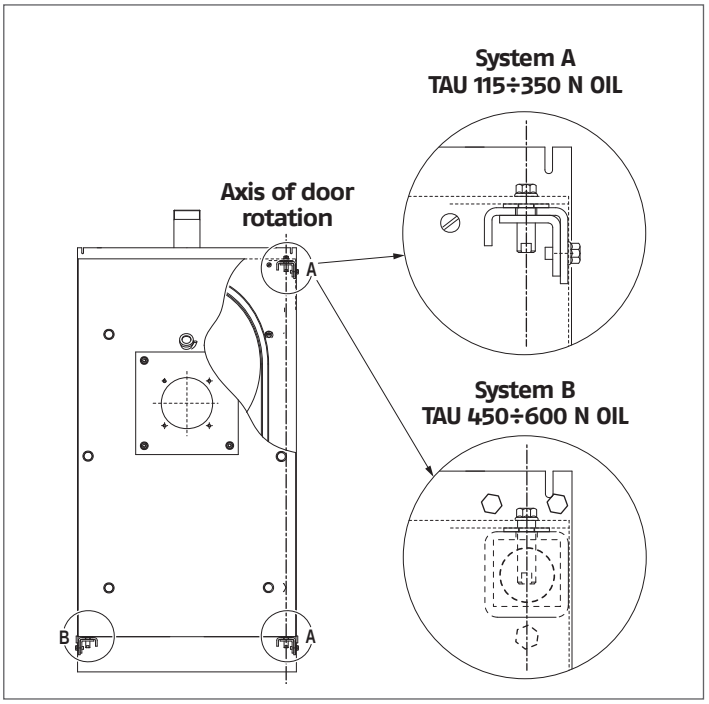

3.14 Changing the direction of door opening

The boiler door hinges are fitted on the right of the door in the factory.

If you need to reverse the direction of opening, remove the boiler's side panel and proceed as follows.

System A - TAU 115÷350 N OIL

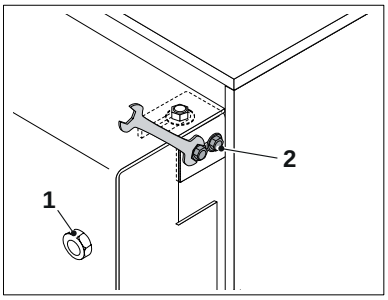

- First ensure that the main door fixing bolts (1) are tight and then remove the safety bolts (2).

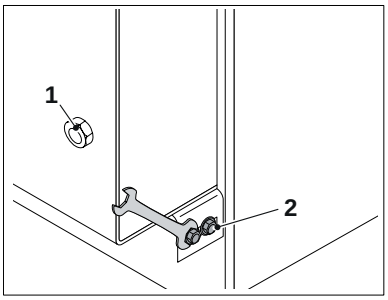

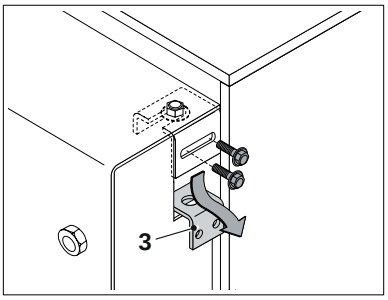

- And lift off the door fixing brackets (3)

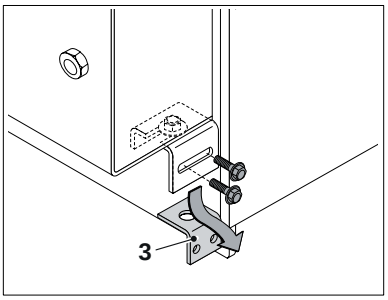

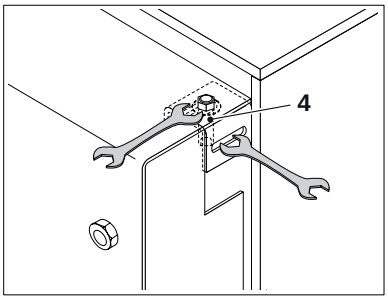

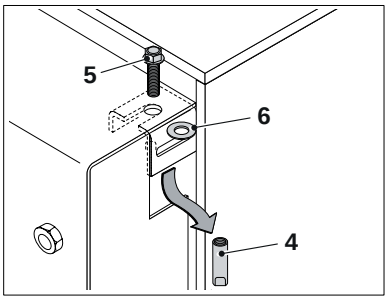

- Insert a spanner through the top slot and hold the bushing (4) steady.
- Unscrew the top bolt (5), then remove the bushing (4) and washer (6).

- Fit the bushing (4), bolt (5) and washer (6) to the opposite side of the door.

⚠ If there are alignment and height issues with the door when inserting the pin-locking assembly (4-5-6), slacken the fixing bolts (1) slightly and lift up the door to make it easier to insert the washer (6).

⚠ To lift the door, use suitable equipment for its weight and wear appropriate personal protective equipment. Once the washer (6) has been inserted, position the screw and bushing, and tighten them.

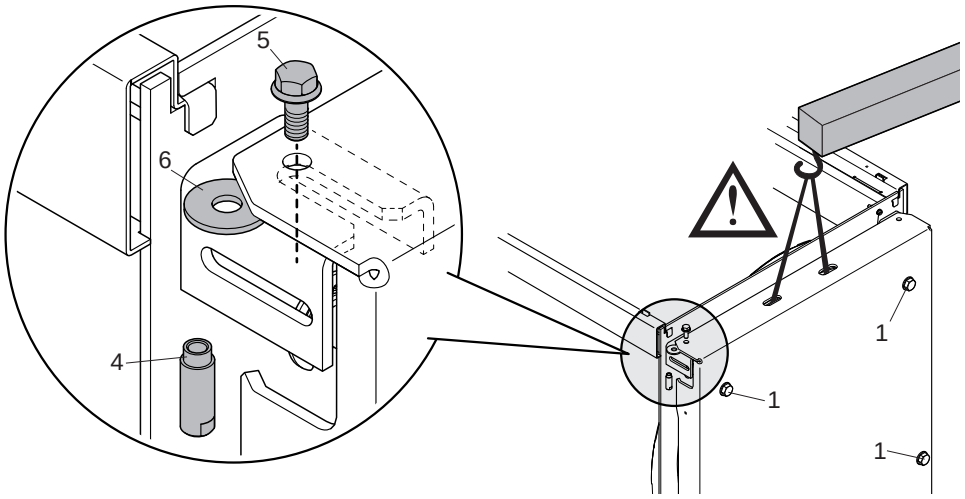

Reverse the above steps to fit the door on the opposite side.

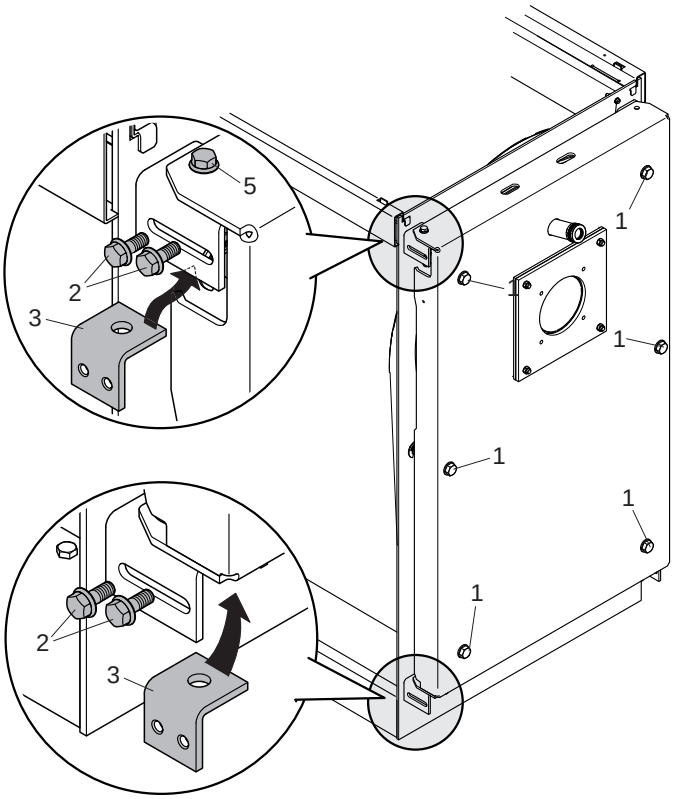

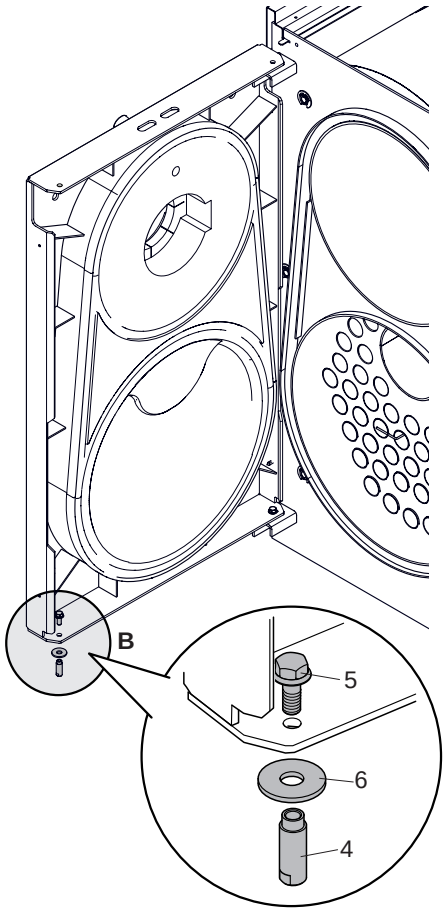

- Fit the top door stop bracket (3) to the opposite side of the door and fix it in place with the safety bolts (2).
- Fit the bottom door stop bracket (3) to the opposite side of the door and fix it in place with the safety bolts (4).

⚠ Make sure that the safety bolts (2) and (5) are securely tightened before attempting to open the door.

- Completely unscrew the main fixing bolts (1) and open the door (these bolts are captive in the door and cannot be removed).
- Remove pin assembly "B" (screw (5), bushing (4) and washer (6)) positioned on the opposite side to the door rotation axis.

System B – TAU 450÷600 N OIL

- Use a blade or alternative saw edge to remove the pre-cut parts (A) at the front end, on the opposite side to the door hinges.
- If necessary, unscrew the screws (1) and open the door to do this from the front.

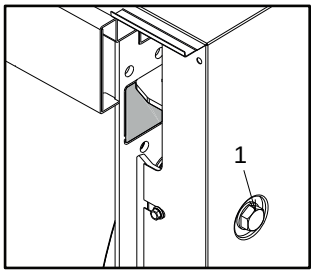

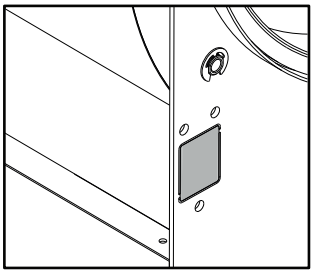

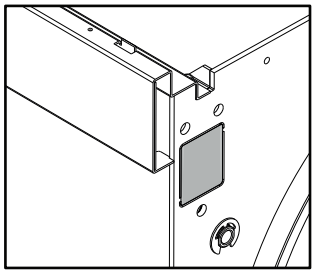

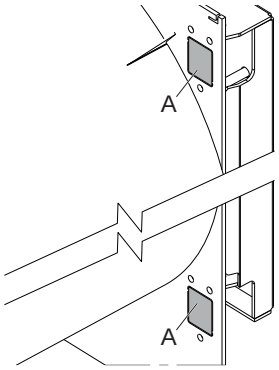

- Close the door and secure it with the screws (1).
- Remove the cap (2) from the bottom hinge, paying attention to the pressure of the spring inside (3).
- Remove the screws (4).
- Tighten the adjustment pin (5) to lower it.
- Remove the bolts (6) and slide out, from the inside, the hinges (7) supporting the door.

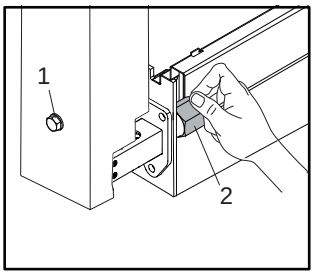

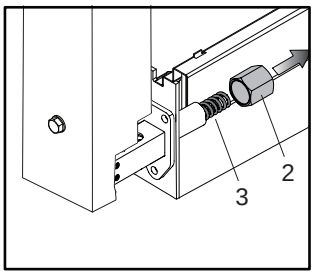

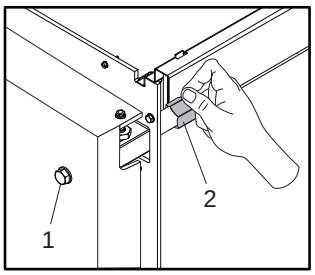

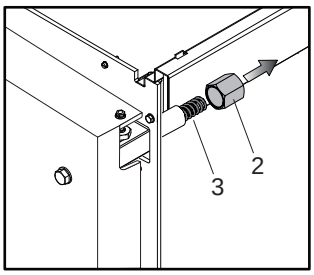

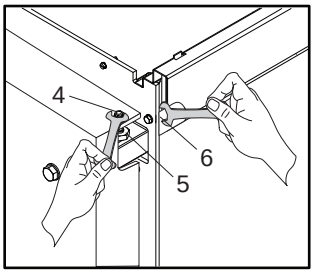

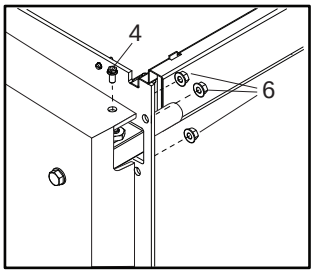

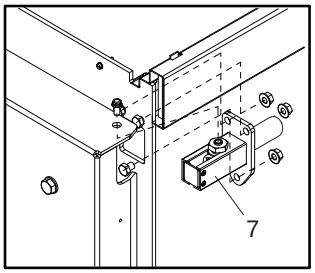

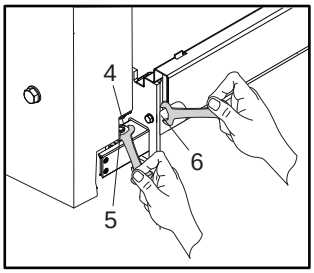

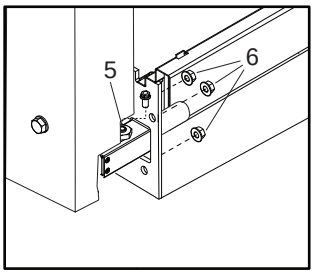

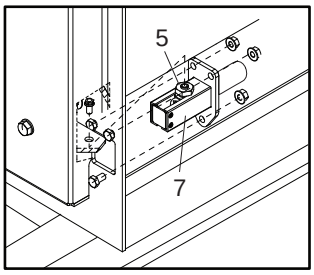

- Restore opening on the other side by repeating the sequence in reverse order.

Take care when assembling the adjustment pin:

- Unscrew the adjustment pin (5) to lift it.
- Check the pin groove (5) is slotted correctly into the door hole.
- Tighten the screws (4) and check the door opens/closes correctly.

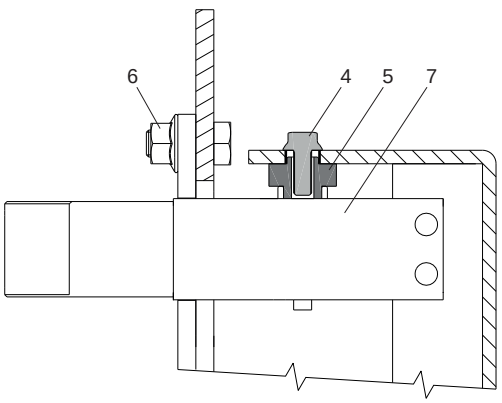

3.15 Removing the hinge assembly "B"

System A

- First ensure that the side safety bolt (2) is tight and then remove the main fixing bolt (1)
- With the door open, remove the hinge assembly 'B' (bushing, bolt, and washer) opposite the pivot side of the door.

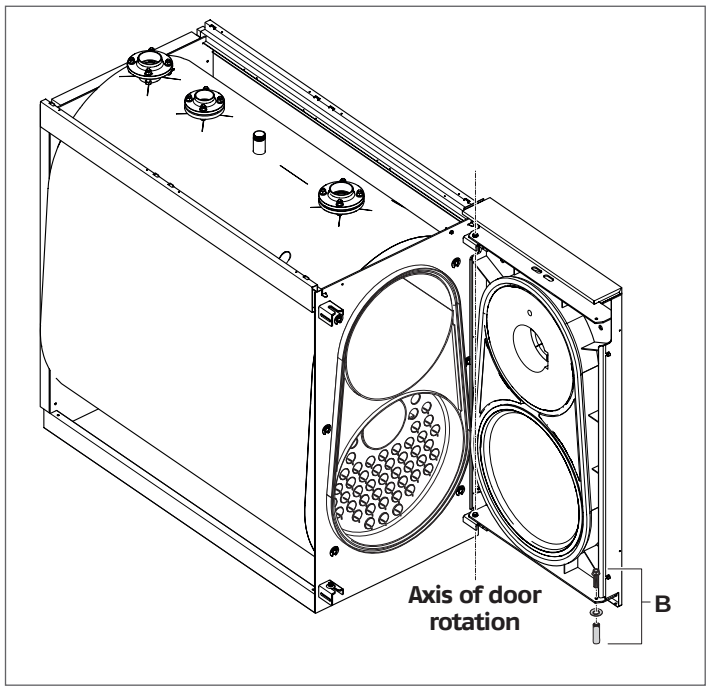

3.16 Earth connection

A terminal is provided on the front boiler head to connect the boiler body to an efficient earth system.
Proceed as follows:

- Unscrew the nut and washer (1) from the earth terminal
- Attach the earth cable's eye connector (2) to the terminal. (Make sure that the cable is of adequate size and complies with legislation in the country of installation)
- Fit the nut and washer (1) to the earth terminal and tighten the nut
- Connect the other end of the cable to the system's earth bar.

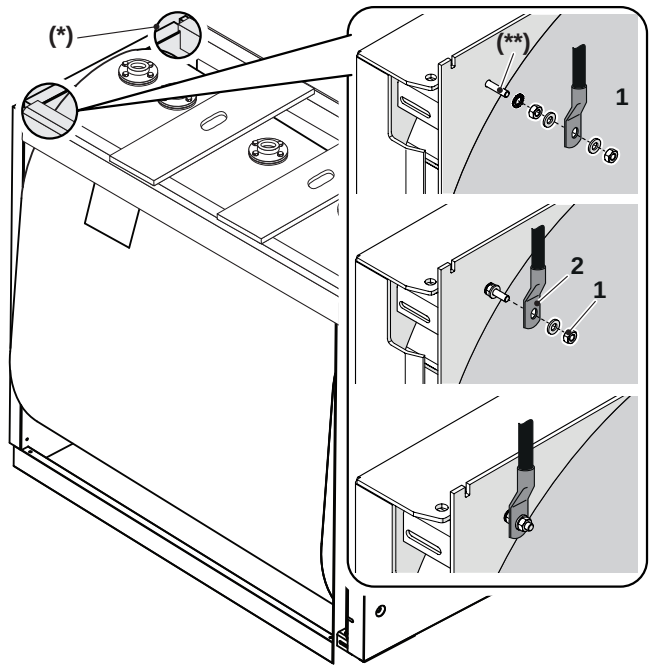

(**) **M6x30 brass**

⚠ Another hole (*) in the left side of the boiler head can also be used to earth the appliance. If you wish to use this hole for the earth connection, remove the terminal fittings from the right of the head and move them to the left earthing point.

3.17 Fitting the casing panels

To mount the panelling, proceed as follows:

- Push out the pre-formed slots in the boiler's side panel (2) or (3) (depending on what side you want to install the control panel) corresponding to the oval cable grommets in the control panel
- Perforate the membranes of the control panel cable grommets. Route the electrical cables through them and insert the sensors in their sockets
- Fix the control panel (20) to the boiler casing using the screws provided
- The front side panels (2) and (3) and rear side panels (4) and (5) over the boiler frame (1) and to the top side beams.

On models TAU 450÷600 N OIL, also fit side panels (6) and (7).

- Secure the side panels in place using the top cross beams (8) and the screws provided
- Fit the top rear panel (9), the bottom rear bracket (10) and then the bottom rear panels (11) and (12). Fit the front top panel (13)
- Fit the top panels (14), (15), (16) and (17)
- Smaller models have only two top panels, one over the right and one over the left of the boiler
- Finally, fit the front trim panels (18) and (19).

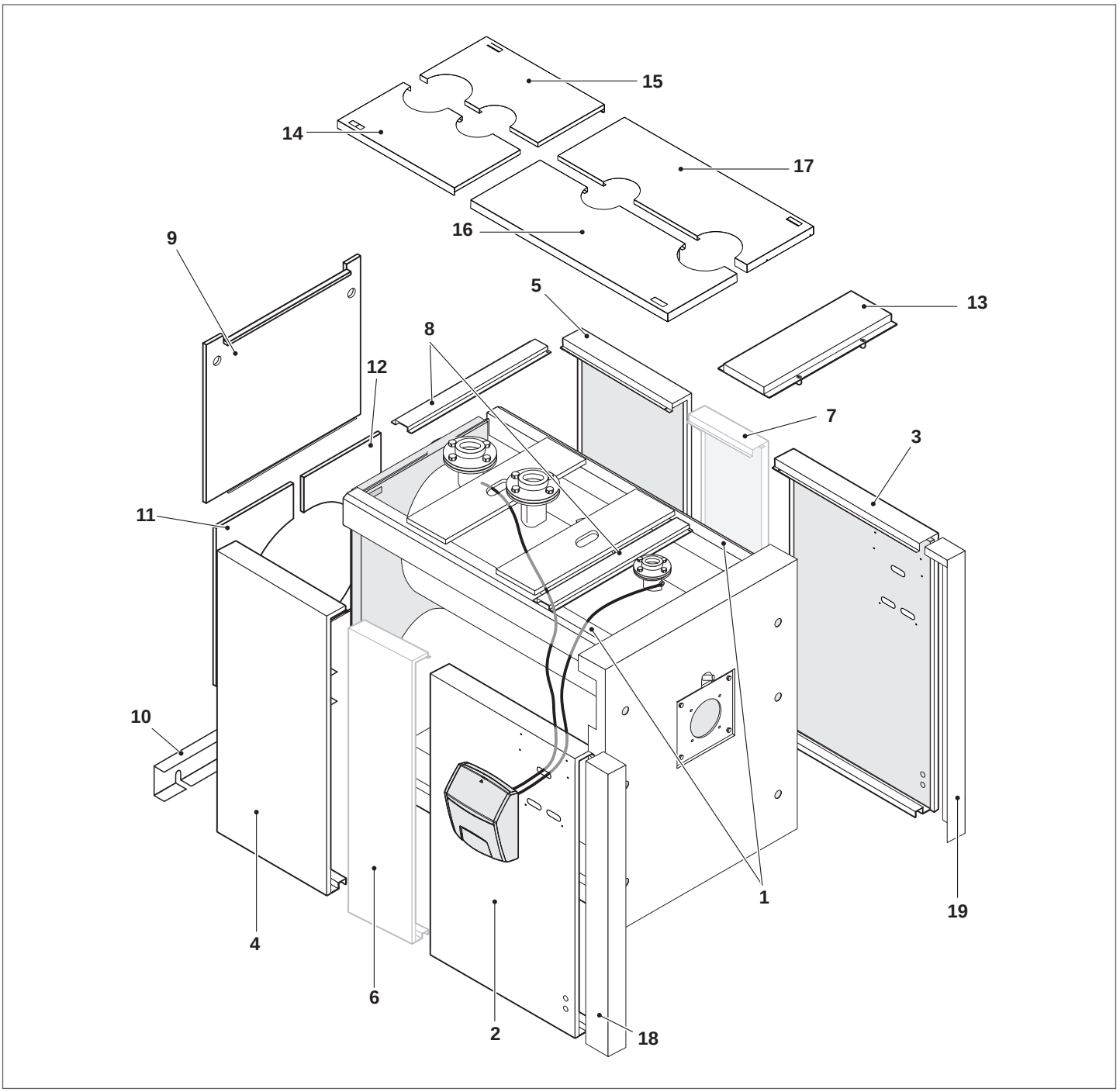

3.17.1 Applying labels

0nce the panelling has been fitted, attach the follow adhesive labels:

1 **Data plate**: this lists the technical specifications and performance of the product. It comes inside the documentation envelope.

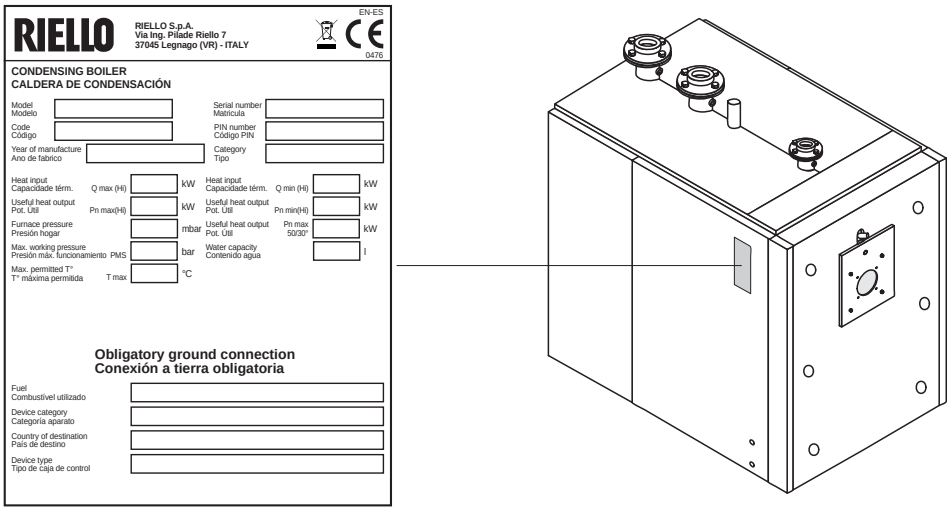

2 **Siphon cleaning label**: this label serves as a reminder to clean the siphon and the connecting pipes.

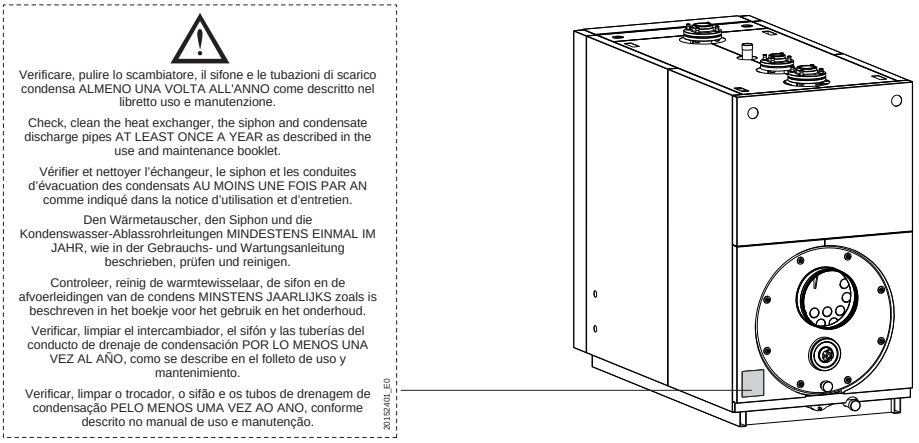

⚠ The labels can be found in the document pouch. The appliance installer MUST apply these labels, as shown in the figure below, once installation is complete. They must be visible. If the labels are lost, please request new ones from the **RIELLO** Technical Assistance Service.

4 TECHNICAL ASSISTANCE SERVICE

4.1 Preparing for initial startup

It is essential to perform the following checks before starting up or testing the functioning of your **RIELLO TAU N OIL** boiler. In particular, check that:

- the protective cardboard sheet (1) has been removed from the ceramic fibre;

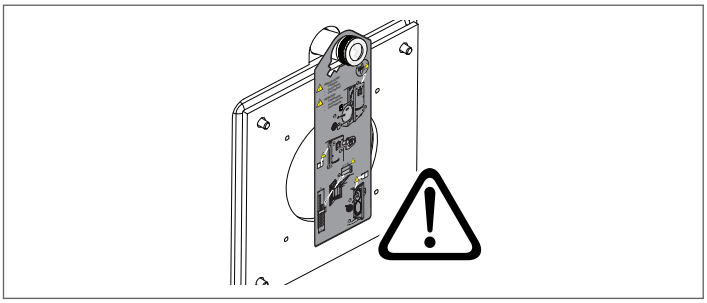

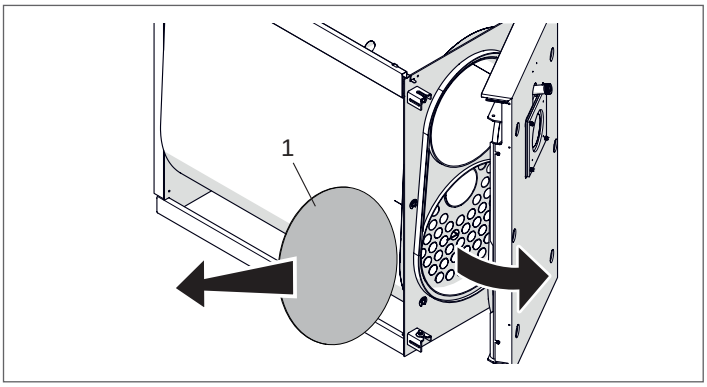

- the turbulators (2) are correctly positioned (vertical position) inside the heat exchanger tubes and the clips (3) are resting against the wall (4) of the heat exchanger

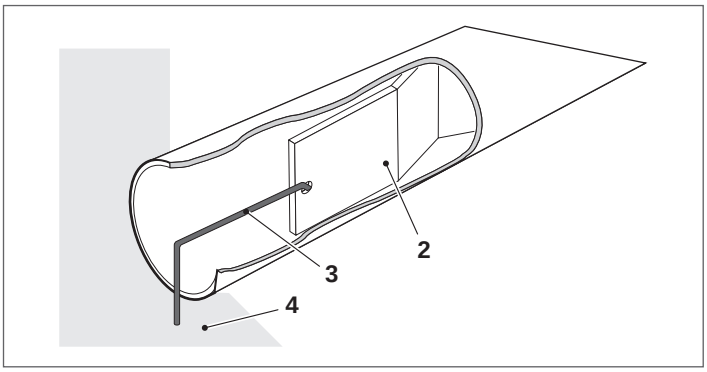

- The water and gas cocks are open

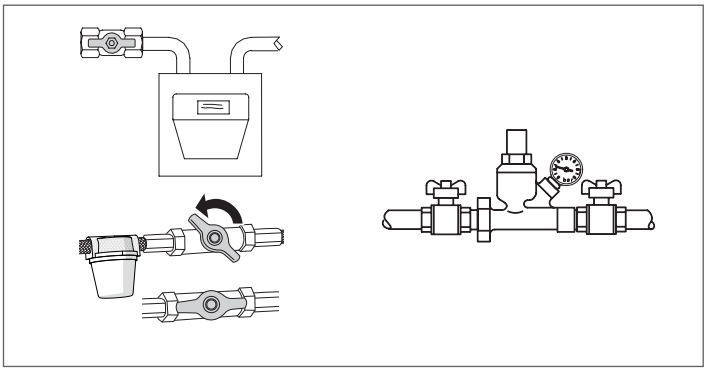

- there is an adequate fuel supply;

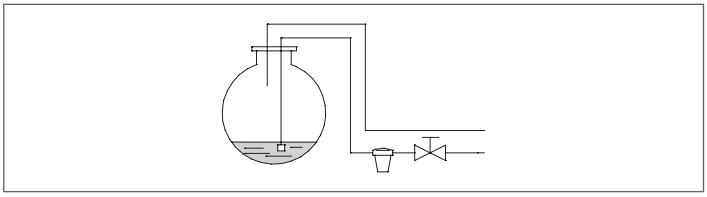

- The expansion vessel is properly charged

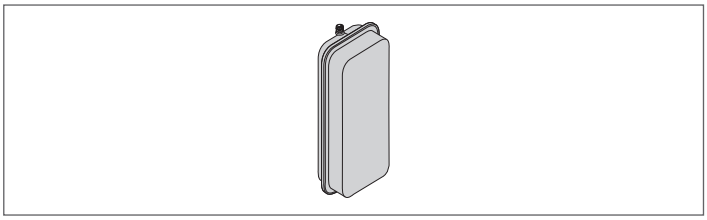

- The working pressure in the heating circuit is **over 1 bar** but below the maximum limit specified for the boiler
- The water circuits have been properly bled

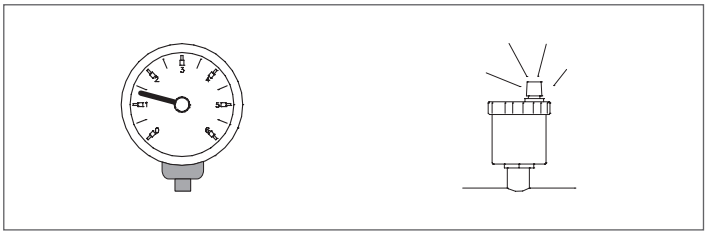

- The condensate discharge siphon has been filled with water
- The mains power connections to the boiler and its accessories (burner, pump, control panel, thermostats, etc.) have been properly made.

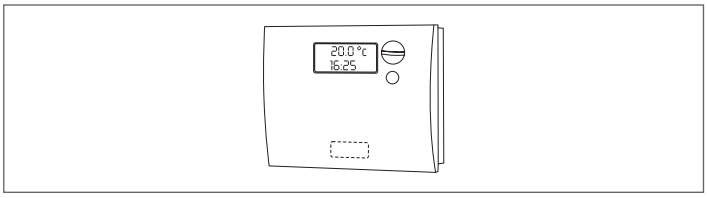

⚠ The phase-neutral polarity has been respected.

⚠ A ground (earth) connection is obligatory.

4.2 Initial startup

Once you have completed all the preparatory steps, proceed as follows to start up the boiler for the first time:

- Turn the boiler's mains power switch ON;
- If the system is equipped with a temperature controller or timer thermostat, make sure that it is switched on;

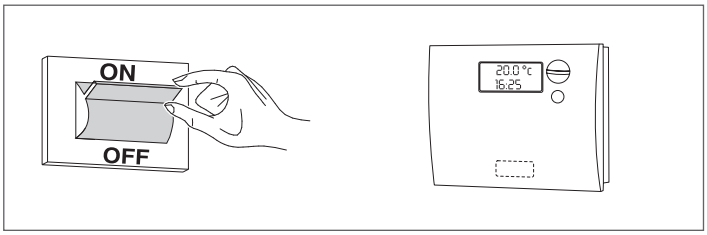

- Turn the control panel power switch ON and make sure that the green power indicator lights;

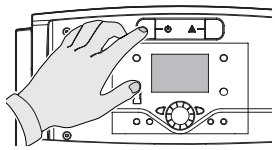

RIELLOtech CLIMA COMFORT
RIELLOtech CLIMA MIX

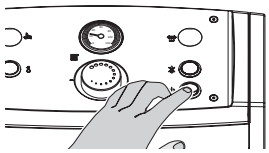

RIELLOtech PRIME
RIELLOtech PRIME ACS

- make the necessary settings as instructed in the instruction manual for your control panel;

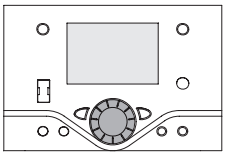

RIELLOtech CLIMA COMFORT
RIELLOtech CLIMA MIX

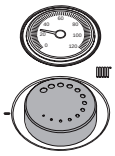

RIELLOtech PRIME
RIELLOtech PRIME ACS

- adjust the timer thermostat/s or temperature controller to the desired temperature (~20°C).

The burner should now ignite and remain in operation until the set temperature is reached.

Subsequent starts and stops will be made automatically according to the desired temperature without the need for further intervention.

If any ignition faults or malfunctions occur, the burner performs a "LOCKOUT SHUTDOWN". This is shown by the red button light on the burner and by the warning light on the control panel.

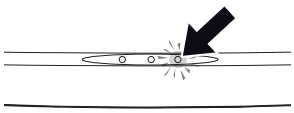

RIELLOtech CLIMA COMFORT
RIELLOtech CLIMA MIX

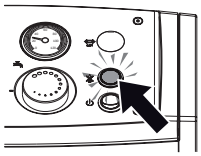

RIELLOtech PRIME
RIELLOtech PRIME ACS

⚠ If a "LOCKOUT SHUTDOWN" occurs, wait about 30 seconds before resetting the burner.

To reset the burner, press the red button light on the burner and wait until the flame ignites.
This operation can be repeated 2 or 3 times at the most. If the problem still persists after that, check:

- all checks listed in the burner's own instruction manual;
- all steps listed in the 'Preparing for Initial Start-up' section;
- all the electrical connections shown on the control panel wiring diagrams.

If the problem persists, check that the safety thermostat has not tripped.

⚠ If the safety thermostat trips, the boiler shuts down and a warning is displayed on the control panel (if present).
Proceed as follows to reset the safety thermostat:

- Wait until boiler temperature falls below 80°C;
- Remove the safety thermostat cover;
- Press the manual reset button;
- Wait for the complete ignition cycle to be repeated and for the flame to ignite.

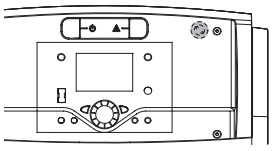

RIELLOtech CLIMA COMFORT
RIELLOtech CLIMA MIX

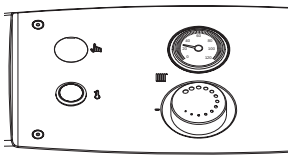

RIELLOtech PRIME
RIELLOtech PRIME ACS

4.3 Checks during and after initial start-up

Once the boiler has started up, make sure that it shuts down and re-starts properly when the following actions are taken:

- Set the boiler thermostat to the required setting (making sure that the temperature control is in manual mode)

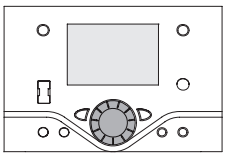

RIELLOtech CLIMA COMFORT
RIELLOtech CLIMA MIX

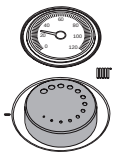

RIELLOtech PRIME
RIELLOtech PRIME ACS

- power to the control panel is switched off and on again;
- the room thermostat or timer thermostat is adjusted.

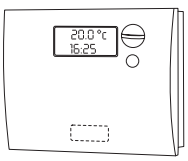

Check that there are no leaks from around the door seal. If there is any leakage of combustion gases, adjust the door as instructed on page 46.

Make sure that all the pumps in the system are free and rotate in the right direction.

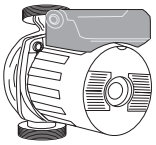

Turn off the main power switch to the boiler and make sure that the boiler shuts down properly.

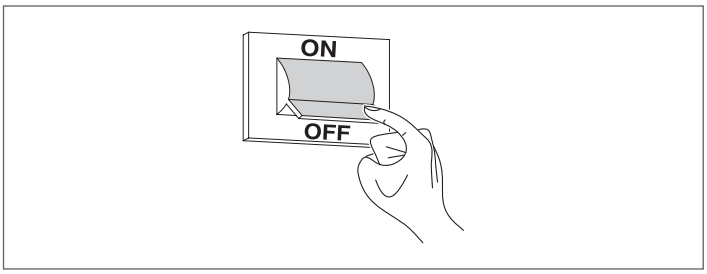

Provided all the above conditions are satisfied, start the boiler up again, then analyse the combustion fumes, measure fuel flow and re-check the door seal.

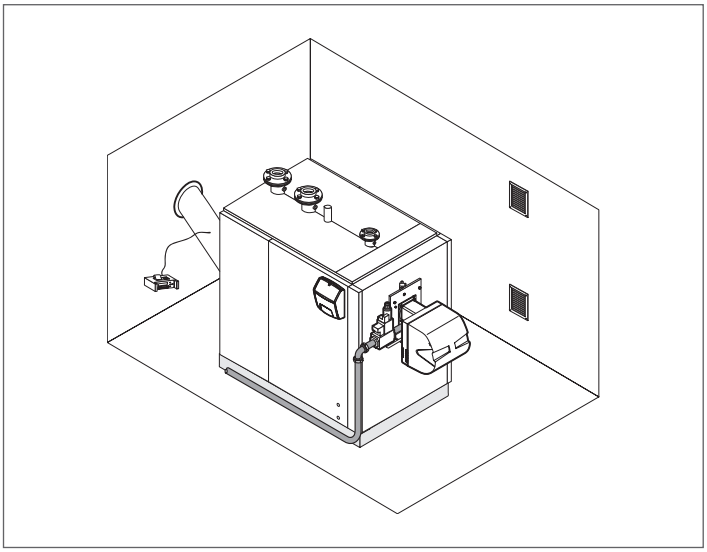

4.4 Maintenance

Regular maintenance is a legal requirement. It is also essential for the safety, efficiency and durability of the boiler. Proper maintenance keeps consumption and emissions down, and ensures that the boiler continues to operate reliably over time.
Have your boiler serviced either by **RIELLO**'s Technical Assistance Service or by a qualified heating engineer.
Analyse the combustion fumes before commencing any maintenance. The results of fume analysis can give a clear idea of what servicing or repairs are needed.

- Turn the system's main power switch OFF
- Close all the gas cocks.

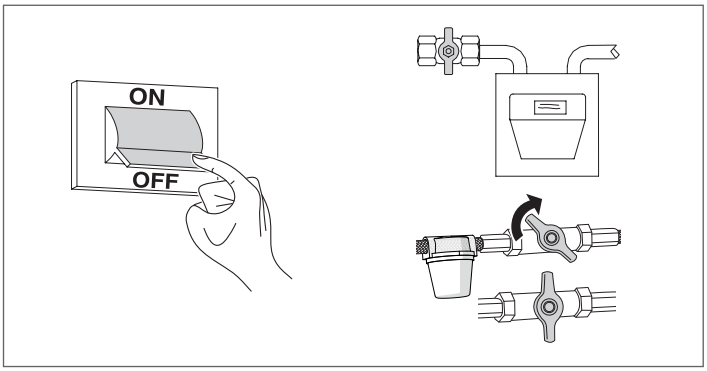

4.4.1 Door opening

System A

- Make sure that the safety bolts (1) on the side of the boiler are tight.
- Check the closure of the 2 hinge pin screws (2).

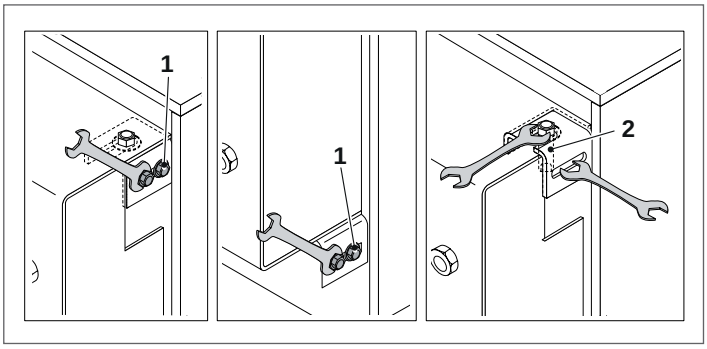

System A – B

- To open the door, simply remove the main fixing bolts 3 holding the door in place. They are located under the 4 caps.

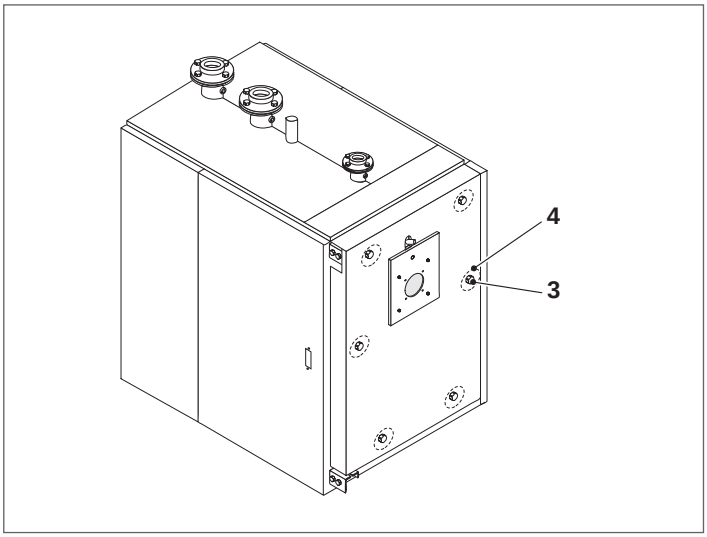

⚠ The first time you open the door, remove the spare hinge assembly 'B' (bushing, bolt, and washer) opposite the pivot side of the door.

4.4.2 Adjusting the door

Make quite sure that the door presses uniformly all around the double seal to prevent dangerous fumes escaping into the air from the pressurized furnace. Proceed as follows to adjust the door seals:

System A

- Fit the door and tighten the main fixing bolts (2) until the seals start to compress
- Loosen the safety bolts (1) then fully screw in the main door fixing bolts (2)
- Tighten the safety screws (1).

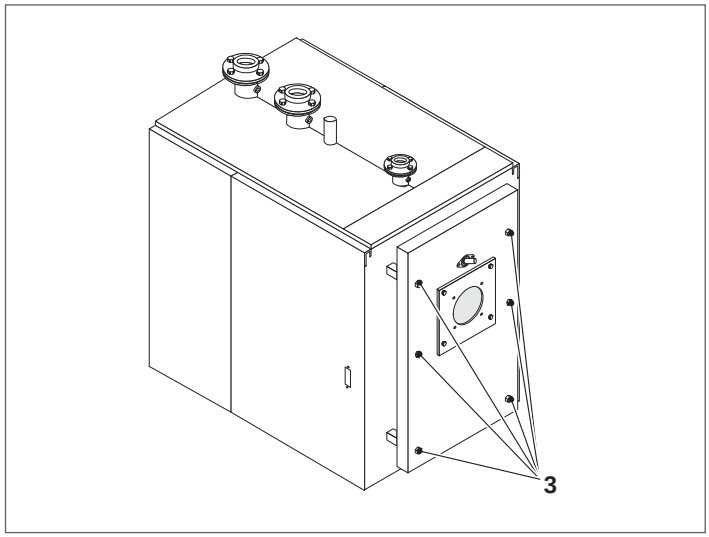

System B

- Put the door in its correct position and tighten the main locking screws (2) until the packing starts to be compressed.

⚠ Make sure that the door is properly adjusted after every maintenance operation.

4.5 Cleaning the boiler

Clean the boiler and remove any carbon deposits from the surfaces of the heat exchanger **at least once a year**. This not only extends the boiler's working life, but also keeps it efficient in terms of heat output and consumption.

Proceed as follows to clean the boiler:

- Open the front door (1) and remove turbolators (2)

⚠ Every 300 hours of operation, the use of light oil burners with a smoke value greater than 3 involves:

- clean the boiler's heat exchange surfaces;
- check and clean the turbulators. Replace if worn or damaged.

	BOILER TAU N OIL						
	115	150	210	270	350	450	600
N° turbulators	27	35	49	52	59	72	90

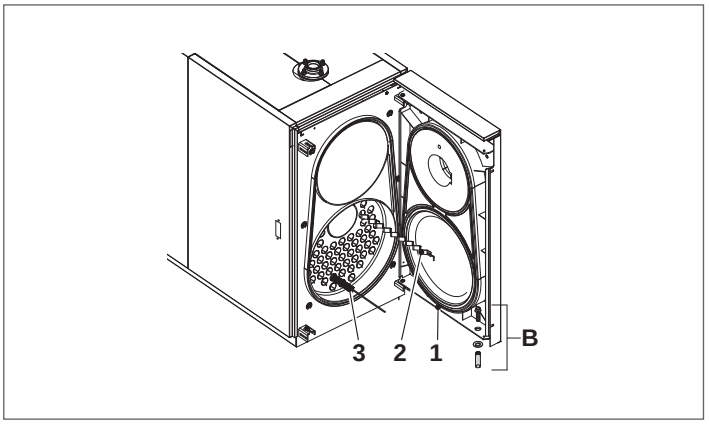

- Use a flue brush (3) or other suitable tool to clean inside the combustion chamber and the flue gas pipes
- Remove the deposits accumulated in the flue box through the opening of the inspection door (4).

If more thorough cleaning is required, remove the outer panels, unscrew the eight fixing bolts (5) and pull firmly on the flue gas box (6) to remove it from the boiler.
Check at regular intervals that the condensate drain (7) is not blocked.

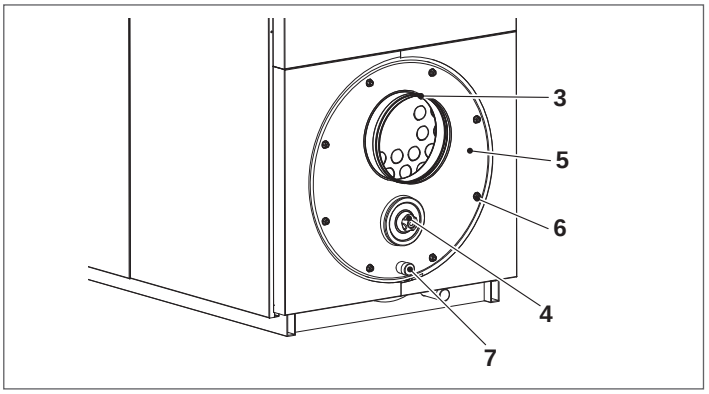

If necessary, replace the seal (8).

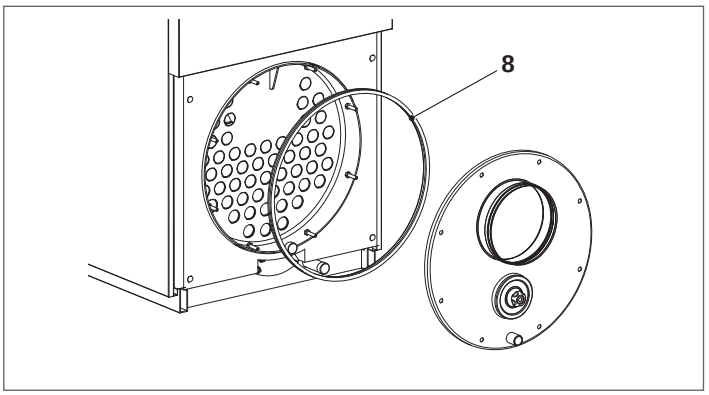

On completion of cleaning, follow the above steps in the reverse order to refit all removed parts.

Use a tightening force of 8 Nm on the retaining nuts.

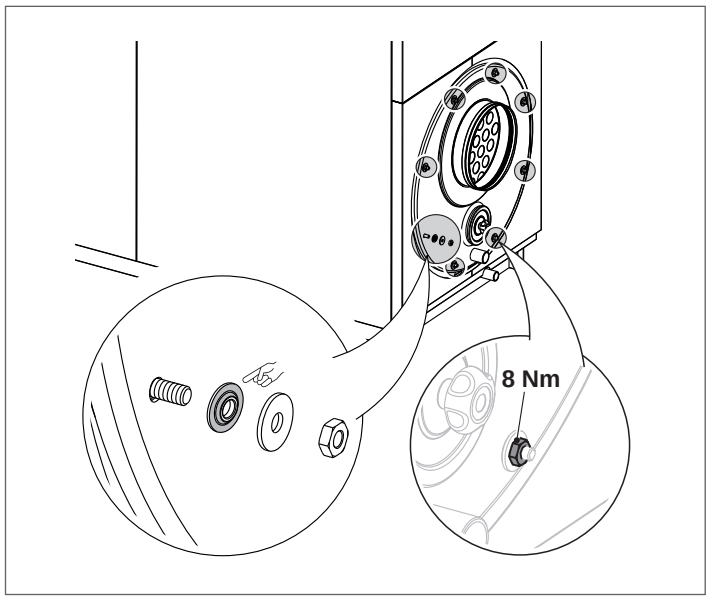

4.5.1 Clean condensation trap

- Disconnect the corrugated condensate outlet pipes (1) and the tapping point pipe (2), and remove the inspection cover (3).

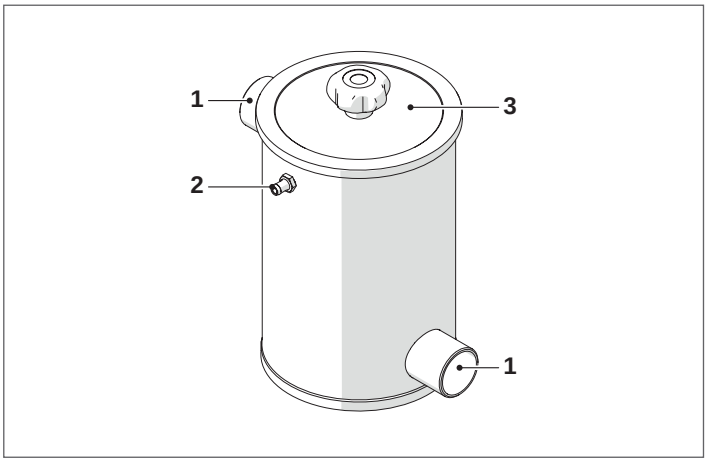

⚠ It is mandatory to check and clean the condensation trap and pipes, up to the collection/drain point, at least once a year.

On completion of cleaning, follow the above steps in the reverse order to refit all removed parts.

4.6 Troubleshooting

FAULT	CAUSE	SOLUTION
The boiler becomes dirty very quickly	Burner badly adjusted	– Check the adjustment of the burner (perform flue gas analysis)
	Blockage in stack	– Clean the flue gas pipes and stack
	Burner air intake dirty	– Clean the burner air intake
The boiler does not reach its temperature setpoint	Boiler dirty	– Clean the flue gas pipes
	Boiler and burner mismatched	– Check specifications and settings
	Insufficient air/fuel flow to burner	– Check and adjust the burner
	Incorrect adjustment	– Check correct functioning – Check the temperature setting
The boiler keeps shutting down, and the control panel warning light comes on	Incorrect adjustment	– Check correct functioning – Check the temperature setting – Check the electrical wiring – Check the sensors
	No water supply	– Check the circuit pressure
	Air in the circuit	– Check the circuit pressure – Check the vent valve
The generator is at temperature but the heating system is cold	Air in the circuit	– Bleed the circuit
	Pump malfunctioning	– Check/unseize the pump
	Problem with minimum temperature thermostat (if present)	– Check the temperature setting
	Problem with minimum temp. thermostat (if present)	– Check the efficiency of the expansion vessel
The generator does not switch on (no fault light signal)	Intervention of the transfer pump auxiliary control safety thermostat	– Check the complete deaeration of the compartmentalised zones of the hydraulic circuit – Check correct functioning – Check operation of the transfer pump activation thermostat or bit thermostat – Check the auxiliary control safety thermostat
There is a smell of fumes	Fumes escaping into the air	– Clean the boiler body – Clean the flue gas pipes – Check that the boiler, flue gas pipes and stack are all properly sealed – Check the door seal
There is a smell of gas	Gas supply circuit	– Check the seals, possible blockages and fuel quality
The safety valve keeps opening	Circuit pressure too high	– Check the circuit pressure – Check pressure reducer functioning – Check pressure reducer setting
	Problem with heating system expansion vessel	– Check the efficiency of the expansion vessel

RIELLO

RIELLO S.p.A.
Via Ing. Pilade Riello, 7
37045 – Legnago (VR)
www.riello.com

The manufacturer strives to continuously improve all products. Appearance, dimensions, technical specifications, standard equipment and accessories are therefore liable to modification without notice.