GB

Dual fuel light oil/gas burners

Progressive two-stage or modulating operation

CODE	MODEL
20171526	RLS 160/E
20206041	RLS 160/E
20171527	RLS 160/E
2017662	RLS 160/E
20206039	RLS 160/E
20206040	RLS 160/E

20161571 (8) - 12/2025

Original instructions

1 Information and general instructions . . . 3
1.1 Information about the instruction manual . . . 3
1.1.1 Introduction . . . 3
1.1.2 General dangers . . . 3
1.1.3 Other symbols . . . 3
1.1.4 Delivery of the system and the instruction manual . . . 4
1.2 Guarantee and responsibility . . . 4

2 Safety and prevention . . . 5
2.1 Introduction . . . 5
2.2 Personnel training . . . 5

3 Technical description of the burner . . . 6
3.1 Technical data . . . 6
3.2 Electrical data . . . 6
3.3 Burner models designation . . . 6
3.4 Packaging - weight - Approximate measurements . . . 7
3.5 Burner dimensions . . . 8
3.6 Standard equipment . . . 8
3.7 Firing rates . . . 9
3.7.1 Procedure to refer burner operating condition at an altitude and/or at a combustion supporter air temperature different to the standard values (328 ft above sea level, 68 °F) . . . 10
3.8 Minimum furnace dimensions . . . 11
3.9 Commercial boilers . . . 11
3.10 Burner description . . . 12
3.11 Flame control (LMV36...) . . . 13
3.12 Actuators (SQM33.5...) . . . 16

4 Installation . . . 17
4.1 Notes on safety for the installation . . . 17
4.2 Handling . . . 17
4.3 Preliminary checks . . . 17
4.4 Burner raising . . . 18
4.5 Preparing the boiler . . . 18
4.5.1 Boring the boiler plate . . . 18
4.5.2 Blast tube length . . . 18
4.6 Securing the burner to the boiler . . . 19
4.7 Combustion head calibration . . . 19
4.8 Combustion head setting . . . 20
4.9 Nozzle . . . 21
4.9.1 Nozzle assembly . . . 21
4.9.2 Adjusting the nozzle flow rate . . . 22
4.10 Electrode and ignition pilot adjustment . . . 23
4.11 Burner refitting . . . 23
4.12 Light oil supply . . . 24
4.12.1 Double-pipe circuit . . . 24
4.12.2 The loop circuit . . . 24
4.12.3 Hydraulic connections . . . 25
4.12.4 Pump . . . 25
4.12.5 Pump priming . . . 25
4.13 Gas line . . . 26
4.14 Gas train . . . 26
4.14.1 Gas valve electrical connections . . . 27
4.14.2 Gas pressure . . . 29

4.15 Electrical wiring . . . 30
4.15.1 Notes on terminals . . . 30
4.15.2 Supply cables and external connections passage . . . 31
4.15.3 Cable shielding . . . 31
4.15.4 Inverter connection . . . 32
4.16 Calibración de relé de sobrecarga y protector de motor . . . 33
4.16.1 Electro-mechanical overload relay . . . 33
4.16.2 Electronic relay . . . 33
4.17 Motor connection at 208-230 or 460V . . . 34
4.18 Motor connection at 575V . . . 34
4.19 Motor rotation . . . 34

5 Start-up, calibration and operation of the burner . . . 35
5.1 Notes on safety for the first start-up . . . 35
5.2 Adjustments prior to ignition (light oil) . . . 35
5.2.1 Combustion head setting . . . 35
5.2.2 Nozzle . . . 35
5.2.3 Pump adjustment . . . 35
5.2.4 Air damper adjustment . . . 35
5.3 Burner firing . . . 35
5.4 Burner calibration . . . 35
5.5 Adjustments before first firing (gas) . . . 36
5.6 Burner start-up . . . 36
5.6.1 Adjusting oil/air delivery . . . 36
5.6.2 Adjusting gas/air delivery . . . 36
5.7 Final calibration of the pressure switches . . . 37
5.7.1 Air pressure switch . . . 37
5.7.2 Maximum gas pressure switch . . . 37
5.7.3 Minimum gas pressure switch . . . 38
5.7.4 Low oil pressure switch . . . 38
5.7.5 High oil pressure switch . . . 38
5.8 Burner starting . . . 39
5.8.1 Steady state operation . . . 39
5.8.2 Firing failure . . . 39
5.9 Flame signal measurement . . . 40
5.10 Final checks (with the burner working) . . . 40

6 Maintenance . . . 41
6.1 Notes on safety for the maintenance . . . 41
6.2 Maintenance programme . . . 41
6.2.1 Maintenance frequency . . . 41
6.2.2 Safety test - with gas ball valve closed . . . 41
6.2.3 Checking and cleaning . . . 41
6.2.4 Safety components . . . 42
6.3 Opening the burner . . . 43
6.4 Closing the burner . . . 43

7 Faults - Possible causes - Solutions . . . 44

A Appendix - Spare parts . . . 45

B Appendix - Accessories . . . 48

C Appendix - Burner start up report . . . 49

1 Information and general instructions

1.1 Information about the instruction manual

1.1.1 Introduction

The instruction manual supplied with the burner:

- ➤ is an integral and essential part of the product and must not be separated from it; it must therefore be kept carefully for any necessary consultation and must accompany the burner even if it is transferred to another owner or user, or to another system. If the manual is lost or damaged, another copy must be requested from the Technical Assistance Service of the area;
- ➤ is designed for use by qualified personnel;
- ➤ offers important indications and instructions relating to the installation safety, start-up, use and maintenance of the burner.

Symbols used in the manual

In some parts of the manual you will see triangular DANGER signs. Pay great attention to these, as they indicate a situation of potential danger.

1.1.2 General dangers

The **dangers** can be of **3 levels**, as indicated below.

Maximum danger level!
This symbol indicates operations which, if not carried out correctly, cause serious injury, death or long-term health risks.

This symbol indicates operations which, if not carried out correctly, may cause serious injury, death or long-term health risks.

This symbol indicates operations which, if not carried out correctly, may cause damage to the machine and/or injury to people.

1.1.3 Other symbols

DANGER: LIVE COMPONENTS

This symbol indicates operations which, if not carried out correctly, lead to electric shocks with lethal consequences.

DANGER: FLAMMABLE MATERIAL

This symbol indicates the presence of flammable materials.

DANGER: BURNING

This symbol indicates the risks of burns due to high temperatures.

DANGER: CRUSHING OF LIMBS

This symbol indicates the presence of moving parts: danger of crushing of limbs.

WARNING: MOVING PARTS

This symbol indicates that you must keep limbs away from moving mechanical parts; danger of crushing.

DANGER: EXPLOSION

This symbol signals places where an explosive atmosphere may be present. An explosive atmosphere is defined as a mixture - under atmospheric conditions - of air and flammable substances in the form of gases, vapours, mist or dust in which, after ignition has occurred, combustion spreads to the entire unburned mixture.

PERSONAL PROTECTION EQUIPMENT

These symbols indicate the equipment that must be worn and kept by the operator for protection against threats against safety and/or health while at work.

OBLIGATION TO ASSEMBLE THE HOOD AND ALL THE SAFETY AND PROTECTION DEVICES

This symbol signals the obligation to reassemble the hood and all the safety and protection devices of the burner after any maintenance, cleaning or checking operations.

ENVIRONMENTAL PROTECTION

This symbol gives indications for the use of the machine with respect for the environment.

IMPORTANT INFORMATION

This symbol indicates important information that you must bear in mind.

➤ This symbol indicates a list.

Abbreviations used

Ch.	Chapter
Fig.	Figure
Page	Page
Sec.	Section
Tab.	Table

1.1.4 Delivery of the system and the instruction manual

When the system is delivered, it is important that:

- ➤ the instruction manual is delivered to the user by the system manufacturer, with the recommendation to keep it in the room where the heat generator is to be installed.
- ➤ The instruction manual shows:
  - – the serial number of the burner;

    .....

  - – the address and telephone number of the nearest Assistance Centre.

    .....
    .....
    .....

- ➤ The system supplier must carefully inform the user about:
  - – the use of the system;
  - – any further tests that may be required before activating the system;
  - – maintenance, and the need to have the system checked at least once a year by a representative of the manufacturer or another specialised technician. To ensure a periodic check, the manufacturer recommends the drawing up of a Maintenance Contract.

1.2 Guarantee and responsibility

The manufacturer guarantees its new products from the installation date, in accordance with the regulations in force and/or the sales contract. At the moment of the first start-up, check that the burner is integral and complete.

WARNING

Failure to observe the information given in this manual, operating negligence, incorrect installation and carrying out of non authorised modifications will result in the annulment by the manufacturer of the guarantee that it supplies with the burner.

In particular, the rights to the guarantee and the responsibility will no longer be valid, in the event of damage to things or injury to people, if such damage/injury was due to any of the following causes:

- ➤ incorrect installation, start-up, use and maintenance of the burner;
- ➤ improper, incorrect or unreasonable use of the burner;
- ➤ intervention of unqualified personnel;
- ➤ carrying out of unauthorised modifications on the equipment;
- ➤ use of the burner with safety devices that are faulty, incorrectly applied and/or not working;
- ➤ installation of untested supplementary components on the burner;
- ➤ powering of the burner with unsuitable fuels;
- ➤ faults in the fuel supply system;
- ➤ use of the burner even following an error and/or an irregularity;
- ➤ repairs and/or overhauls incorrectly carried out;
- ➤ modification of the combustion chamber with inserts that prevent the regular development of the structurally established flame;
- ➤ insufficient and inappropriate surveillance and care of those burner components most likely to be subject to wear and tear;
- ➤ the use of non-original components, including spare parts, kits, accessories and optional;
- ➤ force majeure.

The manufacturer furthermore declines any and every responsibility for the failure to observe the contents of this manual.

2 Safety and prevention

2.1 Introduction

The burners have been designed and built in compliance with current regulations and directives, applying the known technical rules of safety and envisaging all the potential danger situations.

It is necessary, however, to bear in mind that the imprudent and clumsy use of the equipment may lead to situations of death risk for the user or third parties, as well as the damaging of the burner or other items. Inattention, thoughtlessness and excessive confidence often cause accidents; the same applies to tiredness and sleepiness.

It is a good idea to remember the following:

➤ The burner must only be used as expressly described. Any other use should be considered improper and therefore dangerous.

In particular:

it can be applied to boilers operating with water, steam, diathermic oil, and to other uses expressly named by the manufacturer;

the type and pressure of the fuel, the voltage and frequency of the electrical power supply, the minimum and maximum deliveries for which the burner has been regulated, the pressurisation of the combustion chamber, the dimensions of the combustion chamber and the room temperature must all be within the values indicated in the instruction manual.

➤ Modification of the burner to alter its performance and destinations is not allowed.

➤ The burner must be used in exemplary technical safety conditions. Any disturbances that could compromise safety must be quickly eliminated.

➤ Opening or tampering with the burner components is not allowed, apart from the parts requiring maintenance.

➤ Only those parts envisaged by the manufacturer can be replaced.

The manufacturer guarantees safety and proper functioning only if all burner components are intact and positioned correctly.

2.2 Personnel training

The user is the person, body or company that has acquired the machine and intends to use it for the specific purpose. He is responsible for the machine and for the training of the people working around it.

The user:

➤ Undertakes to entrust the machine exclusively to suitably trained and qualified personnel;

➤ Undertakes to inform his personnel in a suitable way about the application and observance of the safety instructions. With that aim, he undertakes to ensure that everyone knows the use and safety instructions for his own duties;

➤ Personnel must observe all the danger and caution indications shown on the machine.

➤ Personnel must not carry out, on their own initiative, operations or interventions that are not within their province.

➤ Personnel must inform their superiors of every problem or dangerous situation that may arise.

➤ The assembly of parts of other makes, or any modifications, can alter the characteristics of the machine and hence compromise operating safety. The manufacturer therefore declines any and every responsibility for any damage that may be caused by the use of non-original parts.

In addition:

➤ the user must take all the measures necessary to prevent unauthorised people gaining access to the machine;

➤ the user must inform the manufacturer if faults or malfunctioning of the accident prevention systems are noticed, along with any presumed danger situation.

➤ personnel must always use the personal protective equipment envisaged by legislation and follow the indications given in this manual.

3 Technical description of the burner

3.1 Technical data

Model			RLS 160/E
Output (1) Delivery (1)	High	MBtu/hr (2) GPH	3542 - 7000 (6440*) 25.3 - 50 (46*)
	Low	MBtu/hr (2) GPH	1176 8.4
Fuel			# 2 Fuel oil - Natural gas
Operation			Modulating oil/gas
Nozzle		number	1
Standard applications			Boilers: water, steam, thermal oil
Ambient temperature		°F	32 - 104 (0 - 40 °C)
Combustion air temperature		°F max	140 (60 °C)
Pump	delivery (at 290 PSI) pressure range fuel temperature	GPH PSI ° F max	146 102 - 580 302 (150 °C)
Noise levels (3)		dB(A)	83.1

Tab. A

(*) Firing rate for C - UL Canadian Listing (CNL).
(1) Reference conditions: Ambient temperature 68 °F (20°C) - Barometric pressure 394" WC - Altitude 329 ft.
(2) Equivalent Btu values based on 1 USGPH = 140,000 Btu/hr.
(3) Sound pressure measured in manufacturer's combustion laboratory, with burner operating on test boiler and at maximum rated output.

3.2 Electrical data

Model		RLS 160/E		
Control circuit power supply	V/Ph/Hz	120/1/60		
Main power supply (+/-10%)	V/Ph/Hz	575/3/60	460/3/60	230/3/60
Electrical power consumption	W max	7150	7150	7750
Electrical control circuit cons.	W	750		
Total electrical consumption	W	7900	7900	8500
Electrical protection		NEMA 1		

Tab. B

3.3 Burner models designation

Model	Riello Code	RBNA Code	Voltage	Flame safeguard
RLS 160/E TC	20161481	20171526	575/3/60	Burner mounted
		20206041		
RLS 160/E TC	20161482	20171527	208-230/3/60	Burner mounted
		20171662	460/3/60	
		20206039	208-230/3/60	
		20206040	460/3/60	

Tab. C

3.4 Packaging - weight - Approximate measurements

The burners are skid mounted. Outer dimensions of packaging are indicated in Tab. D - Fig. 1.

The weight of the burner complete with packaging is indicated in Tab. D.

inch	A	B	C	lbs
RLS 160/E	59 $^{1}/_{16}$"	33 $^{1}/_{8}$"	39 $^{3}/_{8}$"	341

Tab. D

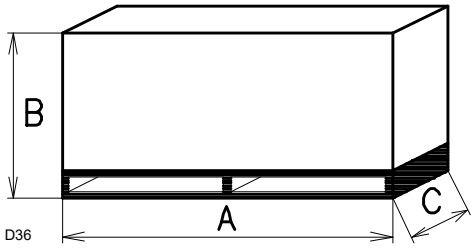

Fig. 1

3.5 Burner dimensions

The maximum dimensions of the burners are given in Fig. 2.

Inspection of the combustion head requires the burner to be opened and the rear part withdrawn on the slide bars.

The maximum dimension of the burner when open, without casing, is give in measurement V.

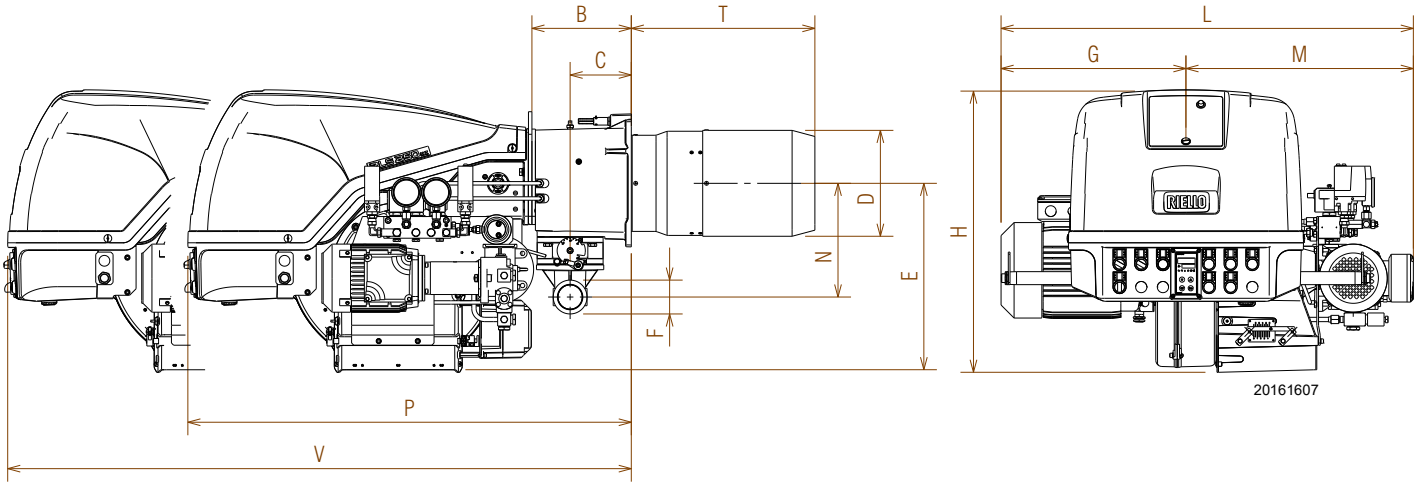

Fig. 2

Model	L	G	M	H	P	T	D	E	V	B	C	N	F
RLS 160/E	37 13/32“	16 49/64“	20 5/8“	25 1/2”	40 61/64“	14 39/64“	8 11/16“	17 5/32“	52 1/2”	8 45/64”	5 9/16”	10 5/16“	2”

Tab. E

3.6 Standard equipment

Gas train flange . . . . . No. 1
Flange fixing screws. . . . . No. 4
Adaptor G 1/4” / 1/4” NPT . . . . . No. 1
Seal for gas train flange . . . . . No. 1
Connector for pilot line . . . . . No. 1
Circular sector . . . . . No. 4
Flexible hoses . . . . . No. 2
Nipples for flexible hoses . . . . . No. 4
Washer for screws . . . . . No. 4
Instructions. . . . . No. 1

WARNING

It is recommended to tighten the screws of the gas flange with a tightening torque of **30** Nm ±10%.

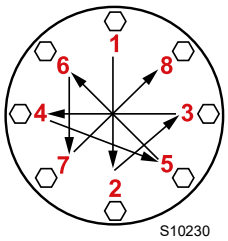

Tighten the nuts gradually (first to 30%, then to 60% up to 100%) according to the cross pattern shown in the figure.

3.7 Firing rates

MAXIMUM OUTPUT must be selected in area A)(Fig. 3) or area B).

MINIMUM OUTPUT must not be lower than the minimum limit shown in the diagram.

Model	MBtu/hr	GPH
RLS 160/E	1176	8.4

Tab. F

WARNING

The firing rate area values have been obtained considering an ambient temperature of 68 °F, and an atmospheric pressure of 394” WC and with the combustion head adjusted as shown on page 19.

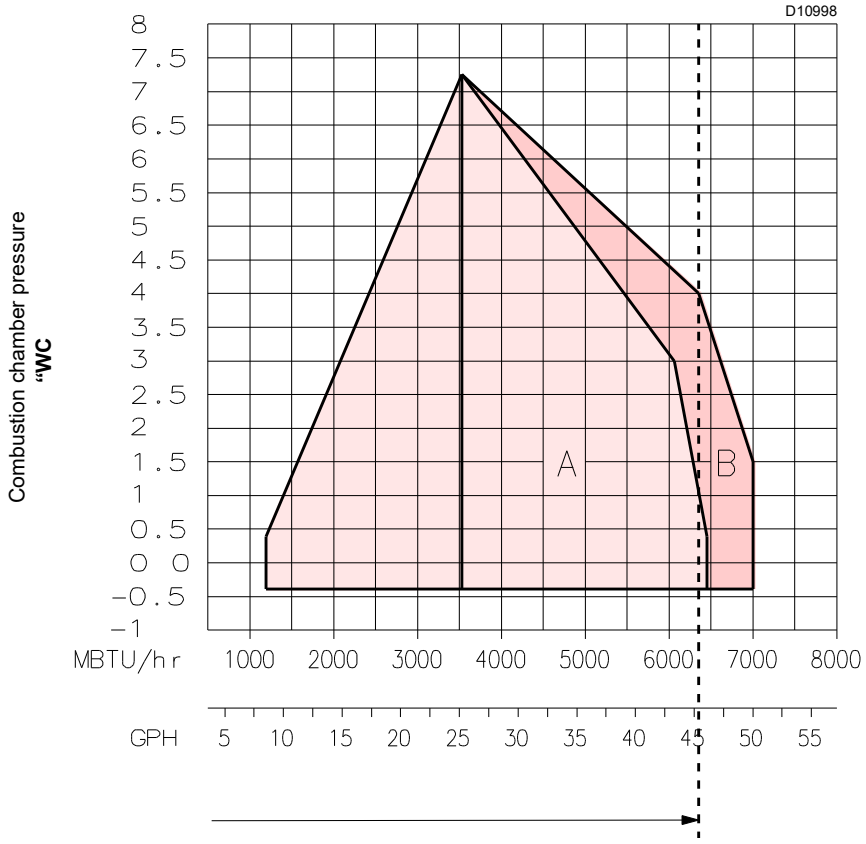

Firing rate for C-UL Canadian Listing (CNL)

Fig. 3

3.7.1 Procedure to refer burner operating condition at an altitude and/or at a combustion supporter air temperature different to the standard values (328 ft above sea level, 68 °F)

				AIR TEMPERATURE								
Altitude	Altitude	bar. press.	bar. press.	**0**	**5**	**10**	**15**	**20**	**25**	**30**	**40**	**°C**
ft a.s.l.	m a.s.l.	"w.c.	mbar	**32**	**41**	**50**	**59**	**68**	**77**	**86**	**104**	**°F**
0	0	399	1013,00	1,087	1,068	1,049	1,031	1,013	0,996	0,980	0,948	
328	100	394	1000,00	1,073	1,054	1,035	1,017	**1,000**	0,983	0,967	0,936	
1.000	305	385	977,40	1,049	1,030	1,012	0,994	0,977	0,961	0,945	0,915	
2.000	610	371	942,80	1,012	0,994	0,976	0,959	0,943	0,927	0,912	0,883	
3.000	915	358	908,20	0,975	0,957	0,940	0,924	0,908	0,893	0,878	0,850	
4.000	1.220	345	875,80	0,940	0,923	0,907	0,891	0,876	0,861	0,847	0,820	
5.000	1.525	332	843,50	0,905	0,889	0,873	0,858	0,844	0,829	0,816	0,790	
6.000	1.830	320	811,85	0,871	0,856	0,841	0,826	0,812	0,798	0,785	0,760	
7.000	2.135	307	779,80	0,837	0,822	0,807	0,793	0,780	0,767	0,754	0,730	
8.000	2.440	294	747,80	0,803	0,788	0,774	0,761	0,748	0,735	0,723	0,700	

Tab. G

F - correction factor of discharge head and delivery in relation to temperature and altitude.

Reference conditions:

- Air temperature 68 °F (20 °C)
- Barometric pressure 394 "w.c. (1000 mbar)
- Altitude 328 ft a.s.l. (100 m a.s.l.)

Example

Using the Tab. H , for an altitude of 3,000 ft and an air temperature of 68 °F, an **F** factor value is obtained equal to 0.908; if the capacity at the boiler furnace is Qfoc = 4,500 Mbtu/h, the correct output will be equal to:

Qburner = Qfoc / F = 4,500 / 0.908 = 4,956 Mbtu/h

3.8 Minimum furnace dimensions

The firing rates were set in relation to certified test boilers.

Fig. 4 indicates the diameter and length of the test combustion chamber.

Example

Output 2579 MBtu/hr: diameter 24 inch - length 6.6 ft.

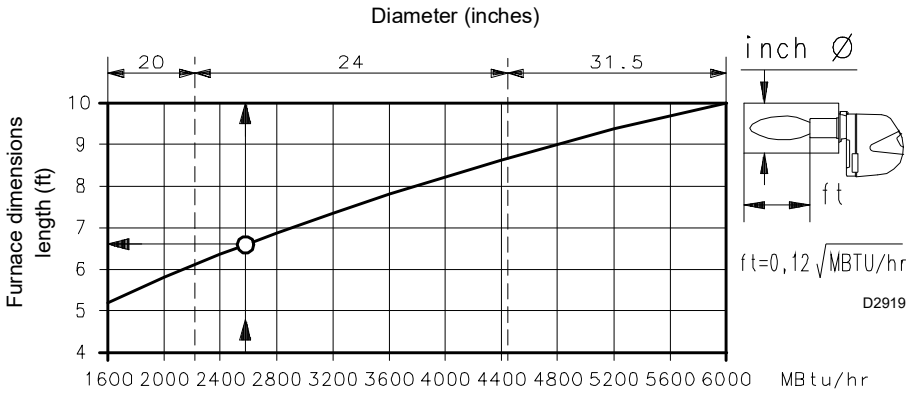

Fig. 4

3.9 Commercial boilers

The burner is suitable for operation on either flame-inversion boilers* or boilers with combustion chambers featuring flow from the base (three flue passes) on which the best results are obtained in terms of low NOx emissions.

The maximum thickness of the boiler's front door must not exceed 10" (Fig. 5).

(*) For flame inversion boilers, a kit is available to reduce CO emissions if required. The kit includes 5 gas pipes, identical to the other 5 already fitted to the burner head. In standard conditions, the burner head is fitted with a second group of pipes, with gas outlet in a different direction with respect to the others. With this Kit, the second group of pipes is replaced, so that all the pipes are the same. After fitting the kit, ensure they work correctly by measuring the CO and flue gases emissions.

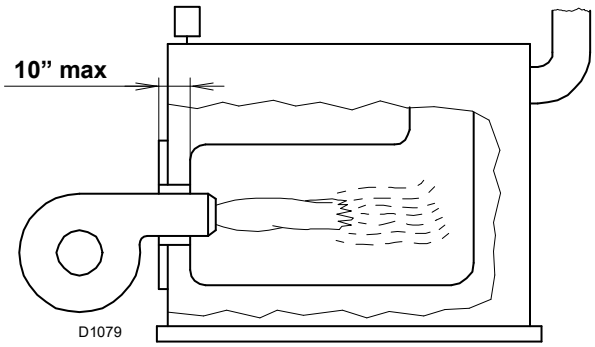

Fig. 5

3.10 Burner description

1 Combustion head
2 Ignition electrodes
3 Screw for combustion head adjustment
4 Sleeve
5 Fan motor
6 RWF55 modulator (with analog output 4-20 mA)
7 Fan motor contactor and thermal relay with reset button
8 Flame sensor
9 Burner terminal strip “X1”
10 Holes for cables grommets for electrical wirings, accessories and power supply (to be carried out by the installer)
11 flame control for checking flame and air/fuel ratio
12 Operator panel with LCD display
13 Flame inspection window
14 Low air pressure switch (differential operating type)
15 Slide bars for opening the burner and inspecting the combustion head
16 Safety oil solenoid valve
17 Valve assembly with pressure regulator on nozzle return
18 Gas pressure test point and head fixing screw
19 Air pressure test point
20 Air servomotor
21 Pump motor
22 Low oil pressure switch
23 Pilot attachment
24 Pump
25 Gas train flange
26 Boiler mounting flange
27 Flame stability disk
28 Screw securing fan to sleeve
29 Max. gas pressure switch
30 Ignition transformers “T2” (for gas operation)
31 Lifting rings and extension bars
32 Oil/gas actuator
33 High oil pressure switch
34 Ignition transformer “T1” (for oil operation)
35 Terminal strip for oil valve “X2”
36 Timer module and relay “KO1”
37 Timer module and relay “KG1”
38 “K3” relay
39 “K1” relay
40 “KG2” relay
41 “K5” relay
42 “K2” relay
43 Horn
44 Auxiliary fuse
45 “OFF - ON” switch
46 “LOCAL-REMOTE” switch
47 “ALARM SILENCE” button
48 “OIL - OFF - GAS” switch
49 “POWER ON” signal
50 “CALL FOR HEAT signal
51 “ALARM ON” signal
52 “IGNITION ON” signal
53 “FUEL ON” signal
54 Optional holes
55 Ground terminals
56 Pump motor contactor and thermal relay with reset button
57 Delivery oil solenoid valve
58 Return oil solenoid valve
59 DIN bar for fuse holder step-down transformer and OCI 412.10
60 Anchor plate for installation of step-down transformer

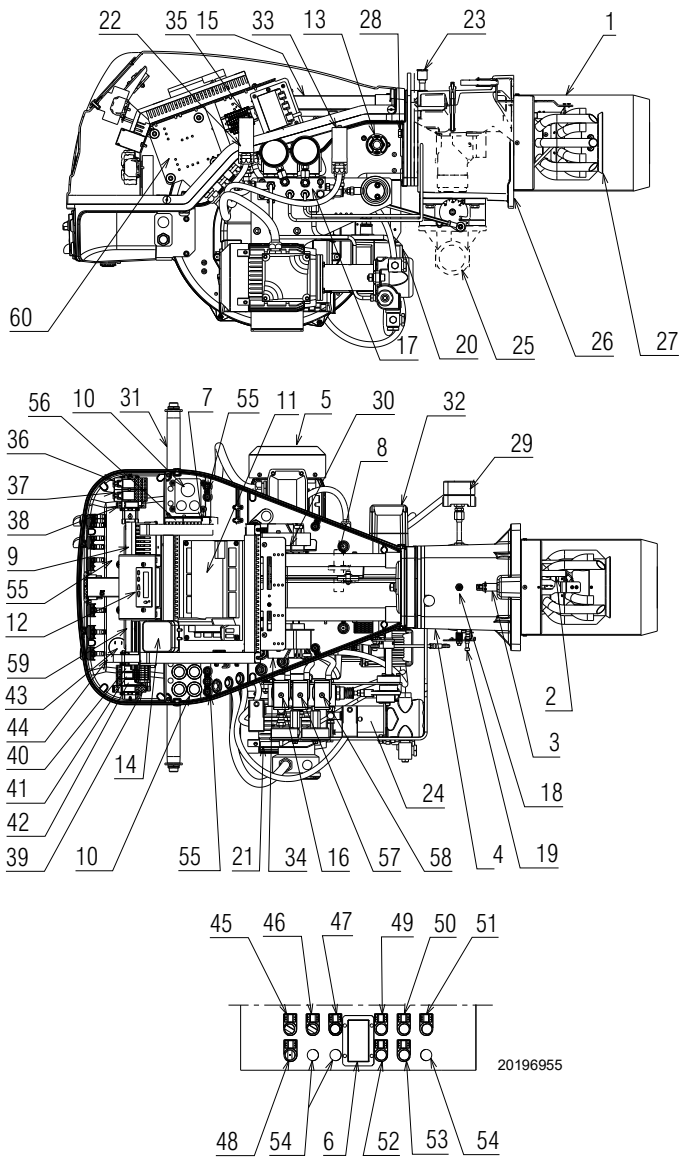

Fig. 6

Three types of burner failure may occur:

➤ **Flame safeguard lock-out**
If the flame safeguard alarm 51)(Fig. 6) lights up, it indicates that the burner is in lock-out. To reset, press the reset push-button.

➤ **Fan motor trip**
release by pressing the push-button on thermal overload 7)(Fig. 6, page 12). “Calibración de relé de sobrecarga y protector de motor” on page 33.

➤ **Pump motor trip**
release by pressing the push-button on thermal overload 56)(Fig. 6). “Calibración de relé de sobrecarga y protector de motor” on page 33.

WARNING

For the installation and the adjustment of the high fire switch please refer to the specific manual of the device.

3.11 Flame control (LMV36...)

Warning notes

WARNING

To avoid injury to persons, damage to property or the environment, the following warning notes must be observed!

The LMV36... is a safety device!

Do not open, interfere with or modify the unit.

The manufacturer will not assume responsibility for any damage resulting from unauthorized interference!

- ➤ All activities (mounting, installation and service work, etc.) must be performed by qualified staff.
- ➤ Before making any wiring changes in the connection area, completely isolate the plant from mains supply (all-polar disconnection). Ensure that the plant cannot be inadvertently switched on again and that it is indeed dead. If not observed, there is a risk of electric shock hazard.
- ➤ Ensure protection against electric shock hazard by providing adequate protection for the burner control's connection terminals.
- ➤ Each time work has been carried out (mounting, installation, service work, etc.), check to ensure that wiring and parameters is in an orderly state.
- ➤ Fall or shock can adversely affect the safety functions. Such units must not be put into operation, even if they do not exhibit any damage.

Introduction

The flame control for the air/fuel ratio (Fig. 7), (hereafter referred to simply as the flame control), that equips the burners, carries out a series of integrated functions in order to optimise burner functioning, both for single operation and together with other units (e.g. double furnace boiler or more than one generator at the same time).

The basic functions carried out by the flame control relate to:

- ➤ flame control;
- ➤ the dosage of air and fuel via the positioning (with direct servo-control) of the relative valves, excluding the possible play in the mechanical cam calibration systems;
- ➤ the modulation of burner output, on the basis of the load requested by the system, maintaining the pressure or temperature of the boiler at the working values set;
- ➤ the safety diagnostic of the air and fuel circuits, via which it is possible to easily identify any causes of malfunctioning.

Mechanical design

The following system components are integrated in the LMV36... basic unit:

- Burner control with gas valve proving system
- Electronic air / fuel ratio control
- Control frequency converter air fan
- Modbus interface

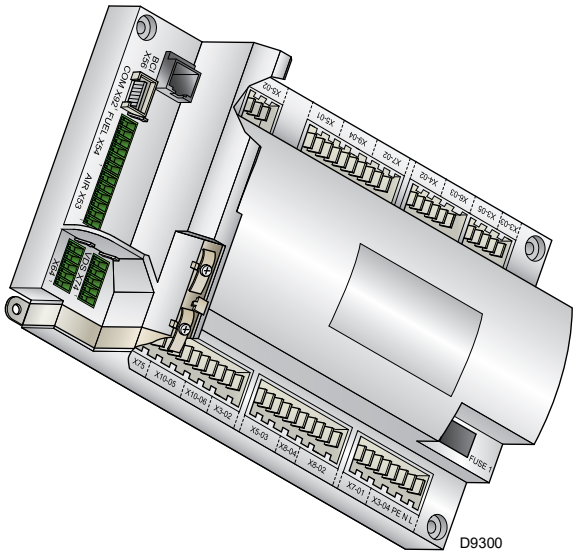

Fig. 7

Installation notes

- Always run high-voltage ignition cables separately while observing the greatest possible distance to the unit and to other cables.
- Do not mix up live and neutral conductors (fire hazard, dangerous failures, loss of protection against electric shock hazard, etc.).
- Do not lay the connecting cable from the LMV36... to the AZL2… together with other cables.

WARNING

The first start-up, like every further operation for the internal settings of the flame control, requires access by means of a password and is only to be carried out by personnel of the Technical Assistance Service who have been specifically trained in the internal programming of the tool.

Electrical connection of the flame detectors

It is important to achieve practically disturbance- and loss-free signal transmission:

- Never run the detector cable together with other cables.
  – Line capacitance reduces the magnitude of the flame signal.
  – Use a separate cable.
- Observe the maximum permissible detector cable lengths.
- The ionization probe is not protected against electric shock hazard. It is mainspowered and must be protected against accidental contact.
- Locate the ignition electrode and the ionization probe such that the ignition spark cannot arc over to the ionization probe (risk of electrical overloads).

Technical data

LMV36... basic unit	Mains voltage	AC 120 V -15 % / +10 %
	Mains frequency	50 / 60 Hz ±6 %
	Power consumption	< 30 W (typically)
	Safety class	I, with parts according to II and III to DIN EN 60730-1
Terminal loading 'Inputs'	Unit fuse F1 (internally)	6.3 AT
	Perm. mains primary fuse (externally)	Max. 16 AT
	Undervoltage • Safety shutdown from operating position at mains voltage • Restart on rise in mains voltage	 Approx. AC 93 V Approx. AC 96 V
Terminal loading 'Outputs'	**Total contact loading:** • Nominal voltage • Unit input current (safety loop) from: - Fan motor contactor - Ignition transformer - Valves - Oil pump / magnetic clutch	 AC 120 V, 50 / 60 Hz Max. 5 A
	Individual contact loading: Fan motor contactor • Nominal voltage • Nominal current • Power factor	 AC 120 V, 50 / 60 Hz 1.6 A pilot duty load declaration to UL372 cosφ > 0.4
	Alarm output • Nominal voltage • Nominal current • Power factor	 AC 120 V, 50 / 60 Hz 1 A cosφ > 0.4
	Ignition transformer • Nominal voltage • Nominal current • Power factor	 AC 120 V, 50 / 60 Hz 1.6 A pilot duty load declaration to UL372 or 250 VA ignition load declaration to UL372 cosφ > 0.2
	Fuel valves • Nominal voltage • Nominal current • Power factor	 AC 120 V, 50 / 60 Hz 1.6 A pilot duty load declaration to UL372 cosφ > 0.4
	Operation display • Nominal voltage • Nominal current • Power factor	 AC 120 V, 50 / 60 Hz 0.5 A cosφ > 0.4
Cable lengths	Mains line Display, BCI External lockout reset button	Max. 100 m (100 pF/m) For used outside the burner cover or the control panel: Max. 3 m (100 pF/m) Max. 20 m (100 pF/m)
Environmental conditions	Operation Climatic conditions Mechanical conditions Temperature range Humidity	DIN EN 60721-3-3 Class 3K3 Class 3M3 -20...+60 °C < 95 % r.h.

Tab. H

Operation sequence of the burner

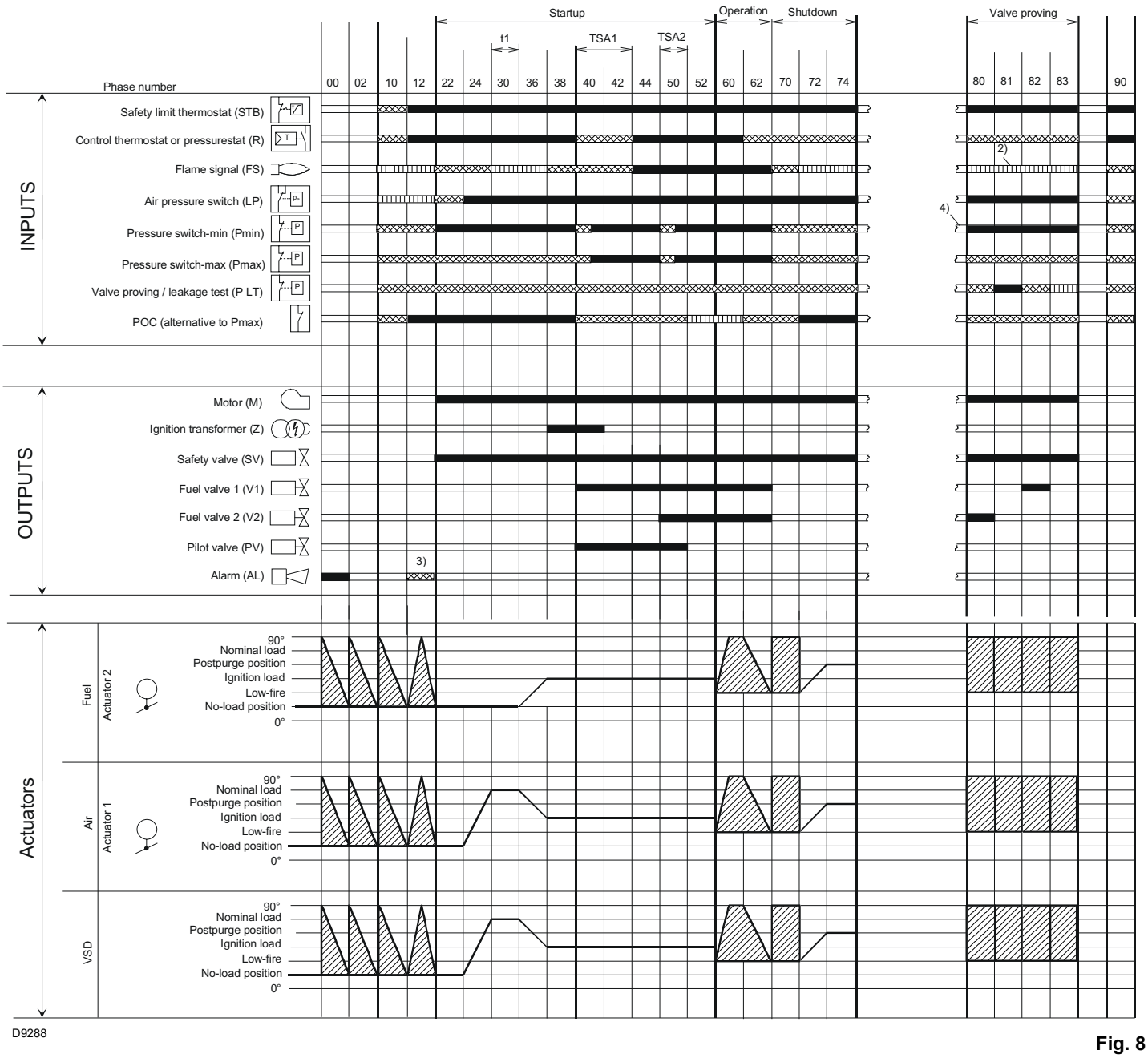

Fig. 8

Key to the sequence diagrams:

Valve proving takes place depending on the parameter:

2) Only with valve proving on startup
3) Parameter: with/without alarm in the event of start prevention
4) In the event of an erroneous signal on startup, followed by phase 10, otherwise phase 70
0° Position as supplied (0°)
90° Actuator fully open (90°)

Signal ON
Signal OFF
Any signal is allowed
In standby: after referencing, the actuator is driven to the no-load position

Assignment of times:

t1 Prepurge time
TSA1 Safety time 1 gas / oil
TSA2 Safety time 2 gas / oil

3.12 Actuators (SQM33.5...)

Warning notes

WARNING

To avoid injury to persons, damage to property or the environment, the following warning notes should be observed!

Do not open, interfere with or modify the actuators!

- ➤ All activities (mounting, installation and service work, etc.) must be performed by qualified staff.
- ➤ Before making any wiring changes in the connection area of the units, completely isolate the equipment from mains supply (all-polar disconnection). If not observed, there is a risk of electric shock hazard.
- ➤ Ensure protection against electric shock hazard by providing adequate protection for the connection terminals and by securing the housing cover.
- ➤ After any kind of activity (mounting, installation and service work, etc.), check wiring. Also ensure that the parameters are correctly set.
- ➤ Fall or shock can adversely affect the safety functions. Such units must not be put into operation, even if they do not exhibit any damage.

WARNING

The actuator's housing must not be opened. The actuator contains an optical feedback system.

Use

The actuators (Fig. 9) are used to drive and position the air damper and the gas butterfly valve, without mechanical leverages but via the interposition of an elastic coupling.

They are commanded by the flame control, which constantly checks their position by means of a return signal from the optic sensor inside the actuator.

The position (in degrees) of the actuators can be seen on the display of the Operator Panel.
Index "0" for fuel actuator, index "1" for air actuator.

Installation notes

- Always run the high-voltage ignition cables separate from the unit and other cables while observing the greatest possible distance.
- The holding torque is reduced when the actuator is disconnected from power.

WARNING

When servicing or replacing the actuators, take care not to invert the connectors.

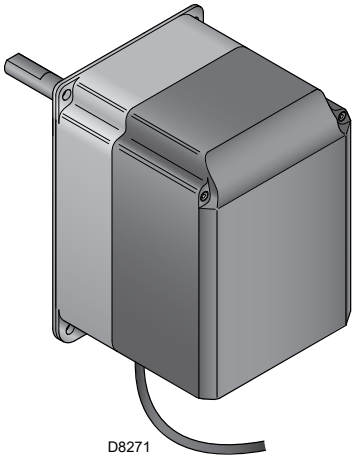

Fig. 9

Technical data

Operating voltage	AC / DC 24 V ±20 % (load on interface)
Safety class	2 to EN 60 730 part 1 and parts 2…14
Power consumption	max. 10 W
Degree of protection	IP54 to EN 60 529-1
Opening time 0 - 90°	min: 5s, max.: 120s (depending on the type of flame control)
Firing rate	0 - 90°
Cable connection	RAST2,5 connectors
Direction of rotation	Clockwise/anticlockwise (can be selected from the flame control)
Nominal output torque	3 Nm
Holding torque (when live)	3 Nm
Holding torque (when dead)	2.6 Nm
Weight	approx. 1 kg
Environmental conditions:	
Operation Climatic conditions Mechanical conditions Temperature range Humidity	DIN EN 60 721-3-3 class 3K5 class 3M4 -20...+ 60 °C < 95 % r.h.

Tab. I

4 Installation

4.1 Notes on safety for the installation

After carefully cleaning all around the area where the burner will be installed, and arranging the correct lighting of the environment, proceed with the installation operations.

DANGER

All the installation, maintenance and disassembly operations must be carried out with the electricity supply disconnected.

WARNING

The installation of the burner must be carried out by qualified personnel, as indicated in this manual and in compliance with the standards and regulations of the laws in force.

DANGER

Combustion air inside the boiler must be free from hazardous mixes (e.g.: chloride, fluoride, halogen); if present, it is highly recommended to carry out cleaning and maintenance more frequently.

4.2 Handling

The burner packaging includes a wooden platform, it is therefore possible to move the burner (still packaged) with a transpallet truck or fork lift truck.

WARNING

The handling operations for the burner can be highly dangerous if not carried out with the greatest attention: keep any unauthorised people at a distance; check the integrity and suitableness of the available means of handling.
Check also that the area in which you are working is empty and that there is an adequate escape area (i.e. a free, safe area to which you can quickly move if the burner should fall).
When handling, keep the load at not more than 20-25cm from the ground.

After positioning the burner near the installation point, correctly dispose of all residual packaging, separating the various types of material.

CAUTION

Before proceeding with the installation operations, carefully clean all around the area where the burner will be installed.

4.3 Preliminary checks

Checking the consignment

CAUTION

After removing all the packaging, check the integrity of the contents. In the event of doubt, do not use the burner; contact the supplier.

The packaging elements (wooden cage or cardboard box, nails, clips, plastic bags, etc.) must not be abandoned as they are potential sources of danger and pollution; they should be collected and disposed of in the appropriate places.

WARNING

The output of the burner must be within the boiler's firing rate.

WARNING

A burner label that has been tampered with, removed or is missing, along with anything else that prevents the definite identification of the burner makes any installation or maintenance work difficult.

4.4 Burner raising

In order to lift the burner, proceed as follows:

➤ screw the two extension bars 1) on the pins 2)(Fig. 10);

➤ place the two plates 3) fix them on the relevant ring nuts 4);

The four burner lifting points are indicated in Fig. 10.

WARNING

The manufacturer declines any and every responsibility for any possible lifting movements, different from those indicated in this manual.

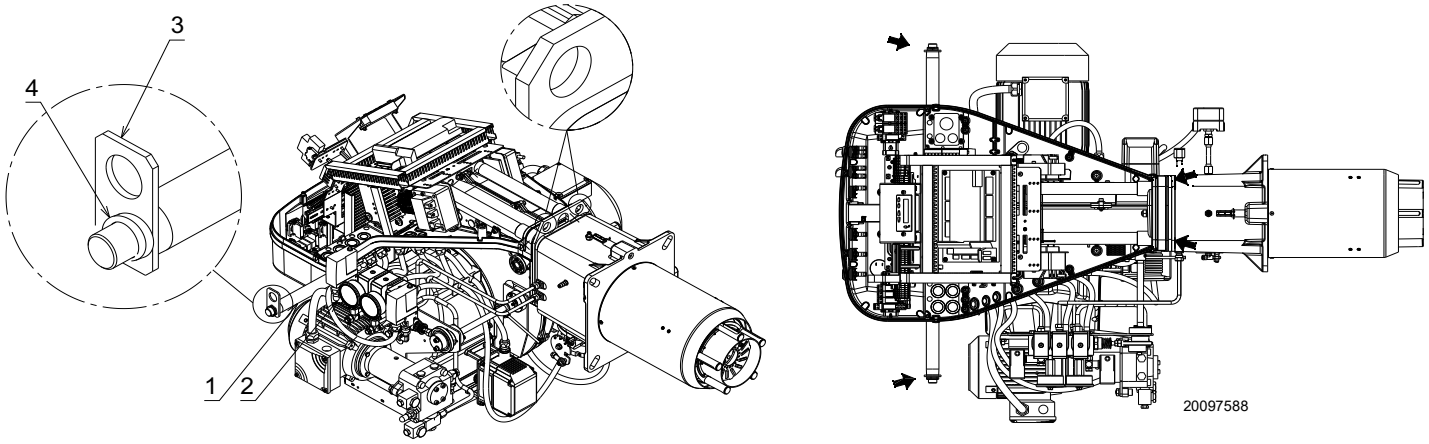

Fig. 10

4.5 Preparing the boiler

4.5.1 Boring the boiler plate

Drill the combustion chamber mounting plate as shown in Fig. 11.

The position of the threaded holes can be marked using the gasket supplied with the burner.

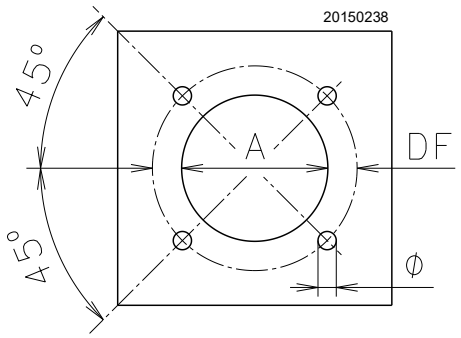

Fig. 11

inch	A	DF	Ø
RLS 160/E	9 1/16”	12 25/32” - 14 1/2”	5/8 W

Tab. J

4.5.2 Blast tube length

The length of the blast tube must be selected according to the indications provided by the manufacturer of the boiler, it must be greater than the thickness of the boiler door complete with its insulation.

The range of lengths available, L (inch), is as follows:

Model	L
RLS 160/E	14 39/64”

Tab. K

For boilers with front flue passes 13) or flame inversion chambers, insulation material 11) must be inserted between the refractory 12) and the blast tube 10).

This protective insulation must not compromise the extraction of the blast tube.

4.6 Securing the burner to the boiler

Detach the combustion head from the burner, (Fig. 12):

- ➤ disconnect the oil pipes by unscrewing the two connectors 6);
- ➤ loosen the 4 screws 3) and remove the cover 1);
- ➤ disengage the swivel coupling 14) from the graduated sector;
- ➤ remove the screws 2) from the slide bars 5);
- ➤ remove the 2 screws 4) and pull the burner back on slide bars 5) by about 4";
- ➤ install the extension bars 31)(Fig. 6, page 12) and re-screw the screws 2) including the safety plate 15);
- ➤ disconnect the electrode wires and then pull the burner completely off the slide bars.

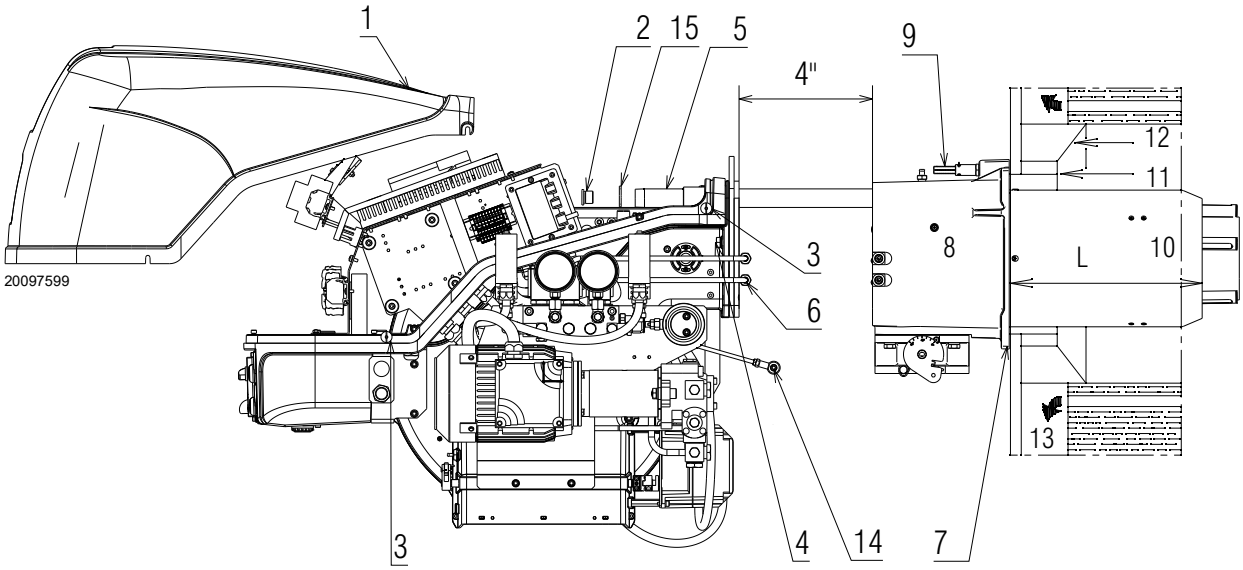

Fig. 12

4.7 Combustion head calibration

At this point check, whether the maximum delivery of the burner in 2nd stage operation is contained in area A) or in area B) of the firing rate. "Firing rates" on page 9.

If it is in area B) then no operation is required.

If, on the other hand, it is in area A), pre-set the combustion head as below indicated:

- ➤ remove the screw 1)(Fig. 13) and extract the internal part 2);
- ➤ replace the 4 circular sectors 3) by unscrewing the relevant screws, with the circular sectors supplied with the burner.

Do not remove the circular sector 4.

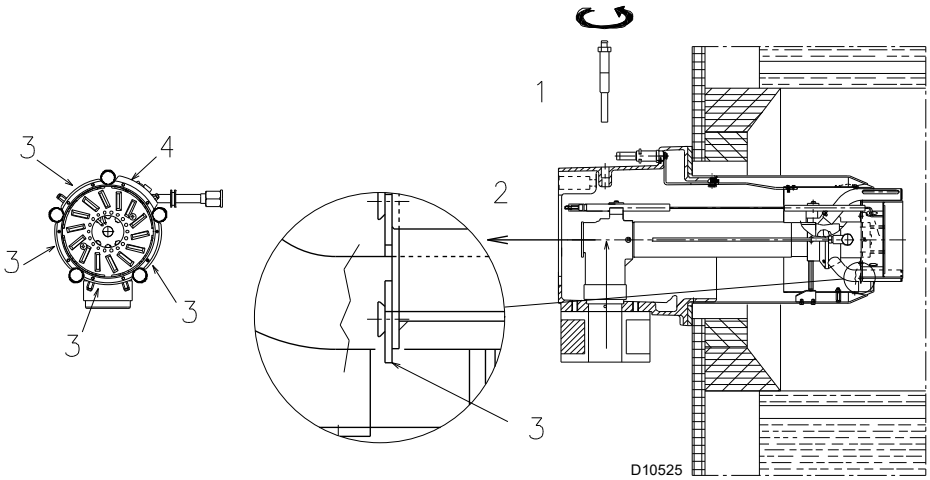

Fig. 13

4.8 Combustion head setting

The setting of the combustion head depends exclusively on the maximum delivery of the burner.

Turn screw 6)(Fig. 14) until the notch shown in diagram (Fig. 15) is level with the front surface of flange 5)(Fig. 14).

Example:

maximum burner delivery = 4940 MBtu/hr.

If diagram (Fig. 15) is consulted it is clear that for this delivery, the combustion head must be adjusted using notch 6, as shown in Fig. 14.

In case of high altitude site, head setting must refer to the “corrected capacity” according procedure described in the paragraph “Procedure to refer burner operating condition at an altitude and/or at a combustion supporter air temperature different to the standard values (328 ft above sea level, 68 °F)” on page 10.

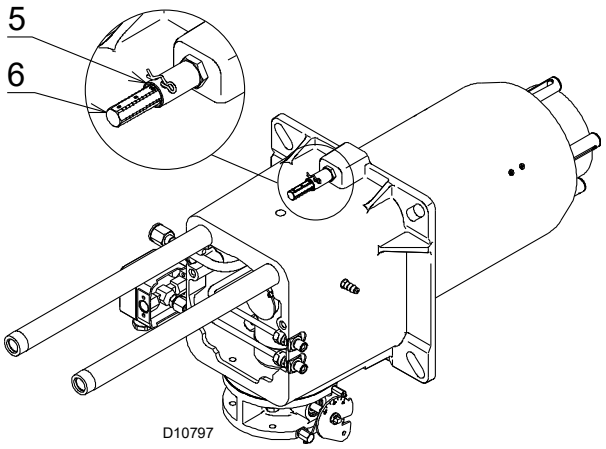

Fig. 14

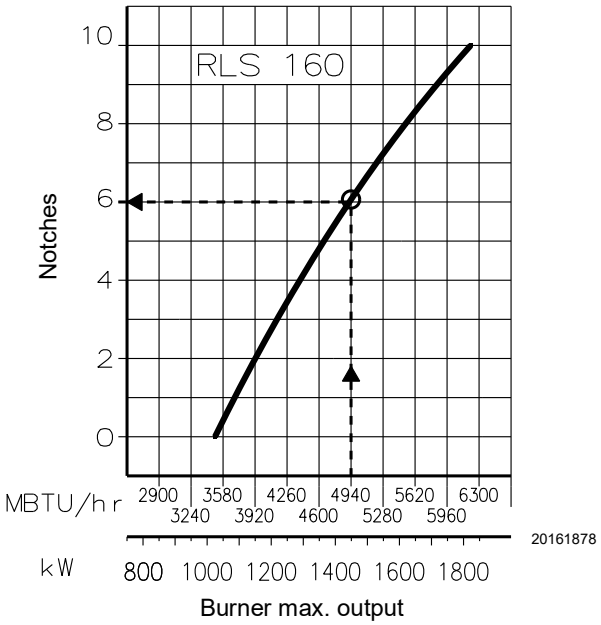

Fig. 15

4.9 Nozzle

The burner complies with the emission requirements of the UL 296 standard.

In order to guarantee that emissions do not vary, recommended and/or alternative nozzles specified by Riello in the Instruction and warning booklet should be used.

WARNING

It is advisable to replace nozzles every year during regular maintenance operations.

CAUTION

The use of nozzles other than those specified by the Manufacturer and inadequate regular maintenance may result into emission limits non-conforming to the values set forth by the regulations in force, and in extremely serious cases, into potential hazards to people and objects.

The manufacturing company shall not be liable for any such damage arising from nonobservance of the requirements contained in this manual.

Recommended nozzles

- BERGONZO A4 45°
- DELAVAN VARIFLO 45° and 60°
- FLUIDICS KC2 30° and 45°

4.9.1 Nozzle assembly

In order to assemble the nozzle, proceed as follows:

➤ remove screw 1)(Fig. 16) and extract the nozzle assembly 2);
➤ install the nozzle 1)(Fig. 17);
➤ fitting the wrench through the central hole in the flame stability disk or loosen screws 1)(Fig. 18);
➤ remove disk 2)(Fig. 18) and replace the nozzles using the wrench 3)(Fig. 18).

WARNING

➤ Do not use any sealing products such as gaskets, sealing compound, or tape.
➤ Be careful to avoid damaging the nozzle sealing seat.
➤ The nozzles must be screwed into place tightly but carefully.
➤ The nozzle for low fire operation is the one lying beneath the firing electrodes (Fig. 23).
➤ Make sure that the electrodes are positioned as shown in Fig. 23.

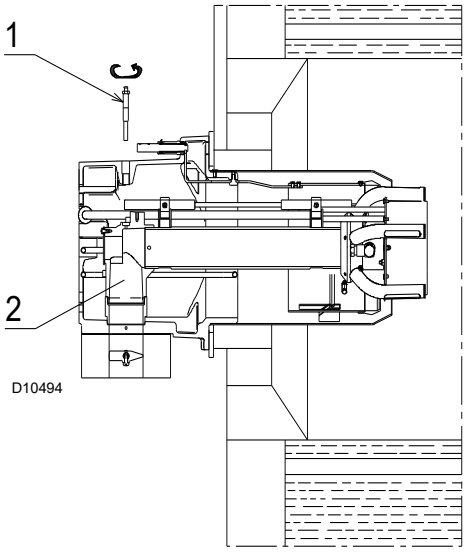

Fig. 16

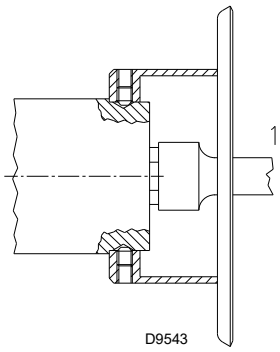

Fig. 17

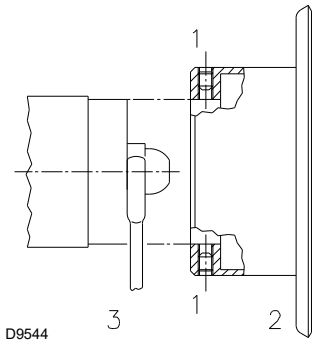

Fig. 18

4.9.2 Adjusting the nozzle flow rate

The nozzle flow rate varies according to the fuel pressure on the nozzle return.

Diagram (Fig. 20) indicates this relationship for type A4 return flow nozzles with pump delivery pressure of 290 PSI. See Fig. 20:

Horizontal axis: PSI, nozzle return pressure

Vertical axis: GPH, nozzle flow rate

The values indicated in the right side of the diagram (Fig. 20), refer to the data printed on the nozzle.

With a pump delivery pressure of 290 PSI, the pressure on the nozzle return must not exceed 246.5 PSI.

The pressure difference between pump delivery and nozzle return must be at least 43.5 PSI. With smaller pressure differences, the pressure on the nozzle return can be unstable.

The nozzle return pressure value is indicated by the pressure gauge 1)(Fig. 19).

The output and the pressure of the nozzle are at maximum when the servomotor is positioned on maximum.

The proper setting of the eccentric 6) is possible when its operation field follows the servomotor operation field (0° - 90°): so, that every variation of the servomotor position corresponds to a pressure variation.

If at the maximum capacity of the nozzle (maximum pressure in the return line) pressure fluctuations are detected on the gauge 1), slightly decrease the pressure in the return line until they are completely eliminated.

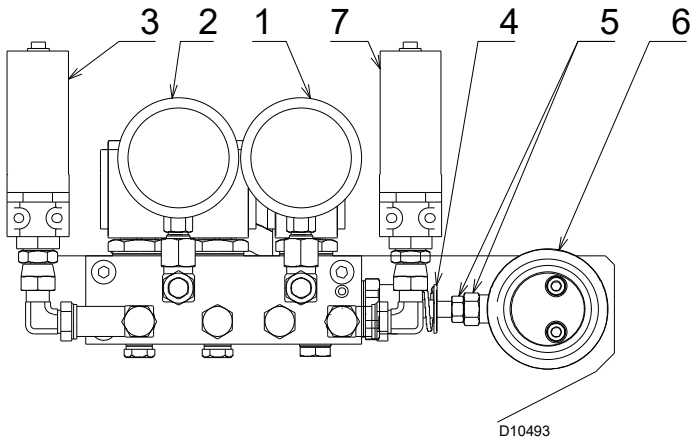

Fig. 19

1 Gauge for pressure in return line
2 Gauge for pressure in delivery line
3 Low oil pressure switch
4 Ring for piston stop
5 Nut and lock-nut for piston setting
6 Fixed eccentric
7 High oil pressure switch

Type A4 return flow nozzle (45°)

Delivery pressure 290 PSI

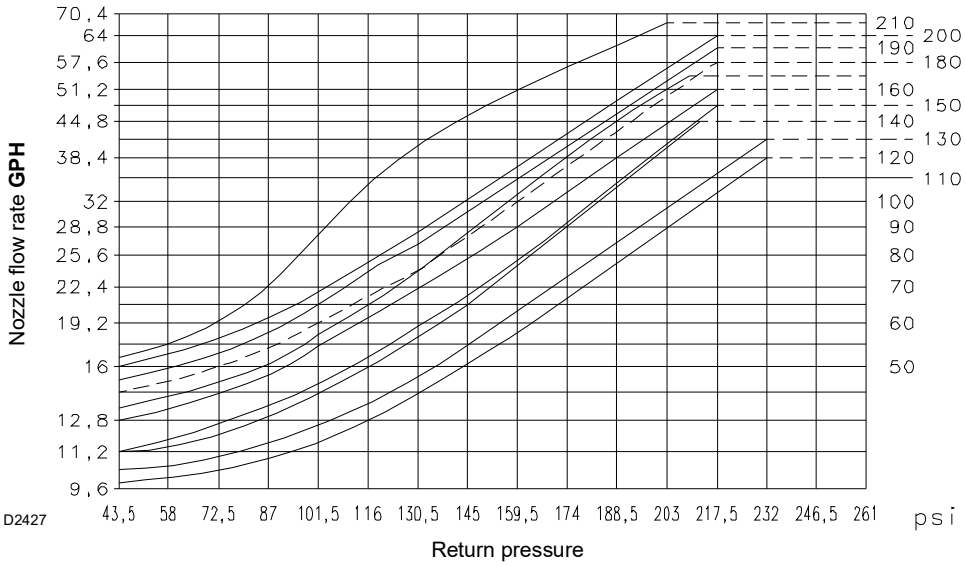

Fig. 20

The values indicated in the right side of the diagram (Fig. 20), refer to the data printed on the nozzle.

4.10 Electrode and ignition pilot adjustment

Place the pilot and electrode as shown in Fig. 21.

The pilot works correctly at pressures ranging from 6 - 12” WC.

WARNING

Make sure that the electrodes are positioned as shown in Fig. 23.

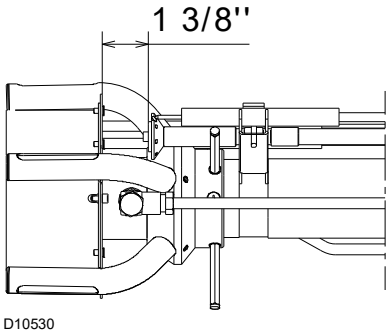

Fig. 21

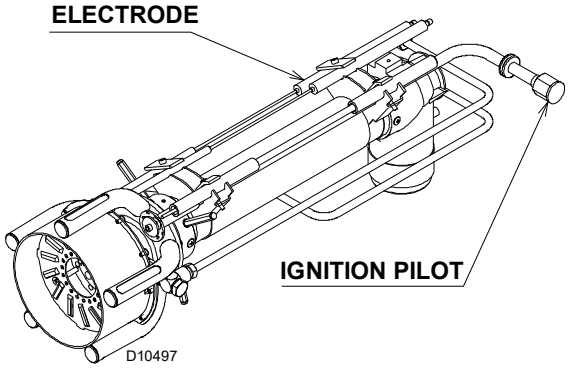

Fig. 22

WARNING

To set the pilot without main burner operation, with RLS/E Burners, don’t modify the connections or make any bridge on the valve terminal board (Fig. 30 - Fig. 31, page 27) but proceed as follows:

– in LMV 2/3 version use the program stop function and set parameter N. 208 at value 3, the burner remains on phase 44 with the pilot only and without opening the main valves.

At the end of the pilot adjustment, restore the parameter N. 208 at value 0; the program stop function is deactivated.

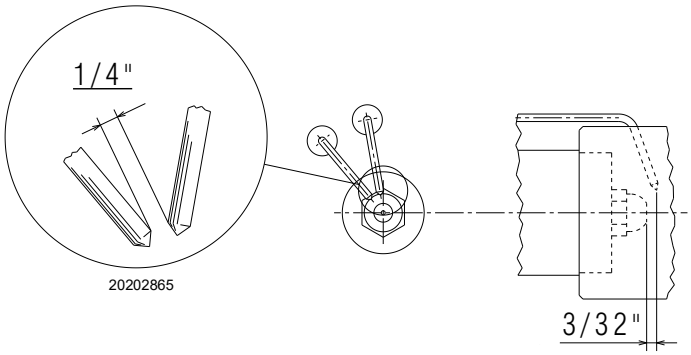

Fig. 23

4.11 Burner refitting

- ➤ Refit the burner to the slide bars 3)(Fig. 24) at approximately 4” from the sleeve 4) - burner positioned as shown in Fig. 12, page 19 - insert the ignition electrode cables;
- ➤ remove the extension bars 31)(Fig. 6, page 12);
- ➤ slide the burner up to the sleeve so that it is positioned as shown in Fig. 24;
- ➤ refit screws 2)(Fig. 24) on slide bars 3) including the safety plate 15)(Fig. 12, page 19);
- ➤ secure the burner to the sleeve by tightening screws 1);
- ➤ connect the oil pipes again by screwing on the two connectors 6)(Fig. 12, page 19).

WARNING

When fitting the burner on the two slide bars, it is advisable to gently draw out the high tension cables until they are slightly stretched.

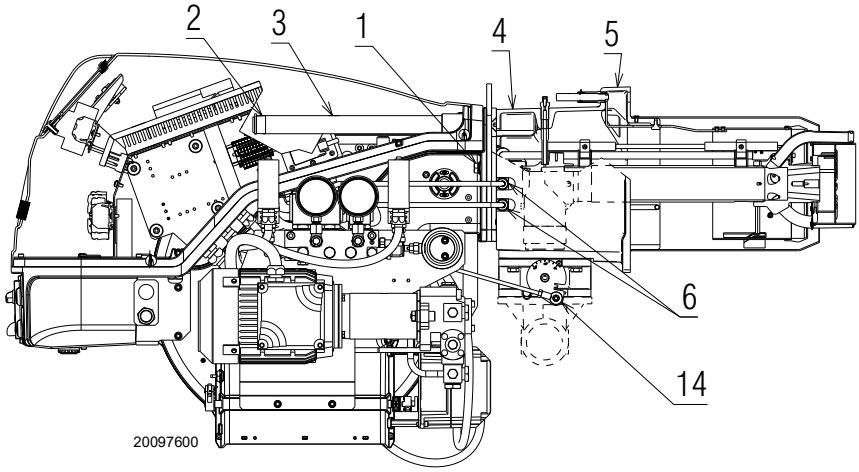

Fig. 24

4.12 Light oil supply

Explosion danger due to fuel leaks in the presence of a flammable source.

Precautions: avoid knocking, attrition, sparks and heat.

Make sure that the fuel interception tap is closed before performing any operation on the burner.

WARNING

The fuel supply line must be installed by qualified personnel, in compliance with current standards and laws.

4.12.1 Double-pipe circuit

The burner is equipped with a self-priming pump which is capable of feeding itself within the limits listed in the table at the side.

The tank higher than the burner A

Distance “P” must not exceed 33 ft in order to avoid subjecting the pump's seal to excessive strain; distance “V” must not exceed 13 ft in order to permit pump self-priming even when the tank is almost completely empty.

The tank lower than the burner B

Pump suction values higher than 13 ft must not be exceeded because at higher levels gas is released from the fuel, the pump starts making noise and its working life-span decreases.
It is good practice to ensure that the return and suction lines enter the burner from the same height; in this way it will be less probable that the suction line fails to prime or stops priming.

4.12.2 The loop circuit

A loop circuit consists of a loop of piping exiting and returning to the tank with an auxiliary pump that circulates the fuel under pressure.

A branch connection from the loop goes to feed the burner.

This circuit is extremely useful whenever the burner pump does not succeed in self-priming because the tank distance and/or height difference are higher than the values listed in the Tab. L.

+ H - H (ft)	L (ft) Ø (inch) 1/2”	 5/8”
+ 13	197	263
+ 10	164	230
+ 6.6	132	197
+ 4.8	115	181
+ 3.3	99	164
+ 1.6	82	148
0	66	132
- 1.6	59	115
- 3.3	49	99
- 4.8	43	82
- 6.6	33	66
- 10	16	33
- 13	-	20

Tab. L

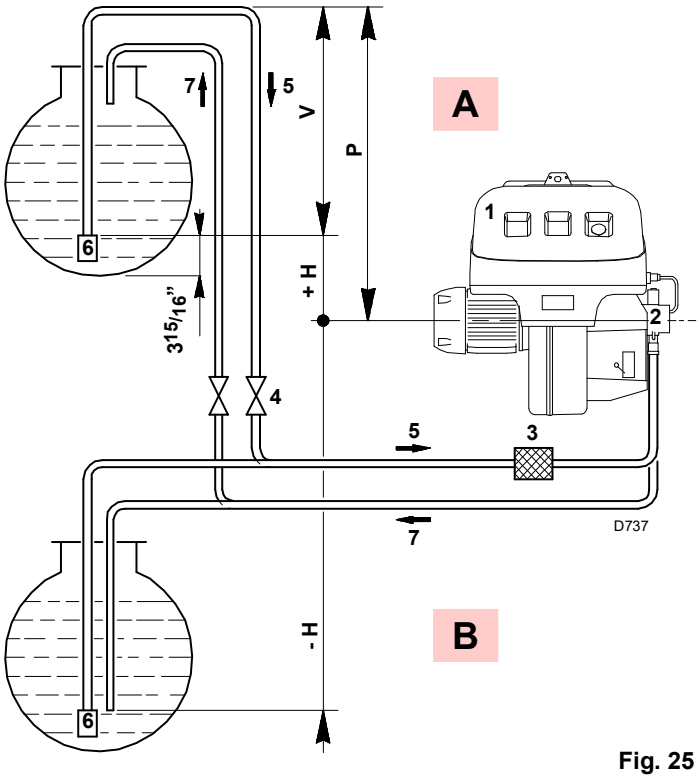

Fig. 25

H Pump/foot valve height difference
L Piping length
Ø Inside pipe diameter
1 Burner
2 Pump
3 Filter (delivered by the Installer)*
4 Manual on/off valve
5 Suction line
6 Foot valve
7 Return line
V Max distance 13 ft

*	cm^2	$inch^2$
Filtering surface	181	28
Filtering degree	100 µm	

4.12.3 Hydraulic connections

The pumps are equipped with a by-pass that separates return line with suction line (Fig. 27).

The pumps are installed on the burner with the by-pass closed by screw 6)(Fig. 57, page 39).

It is therefore necessary to connect both hoses to the pump.

WARNING

The pump seal will be damaged immediately if it is run with the return line closed and the by-pass screw inserted.

Remove the plugs from the suction and return connections of the pump.

Insert the hose connections with the supplied seals into the connections and screw them down.

Take care that the hoses are not stretched or twisted during installation.

Install the hoses where they cannot be stepped on or come into contact with hot surfaces of the boiler.

Now connect the other end of the hoses to the suction and return lines.

4.12.4 Pump

Pump model TA2

Min. delivery rate at 290 PSI pressure	GPH	150
Delivery pressure range	PSI	102 - 580
Max. suction pressure	“Hg	13
Viscosity range	cSt	4 - 800
Max. light oil temperature	°F	284 (140 °C)
Max. suction and return pressure	PSI	72.5
Pressure calibration in the factory	PSI	360

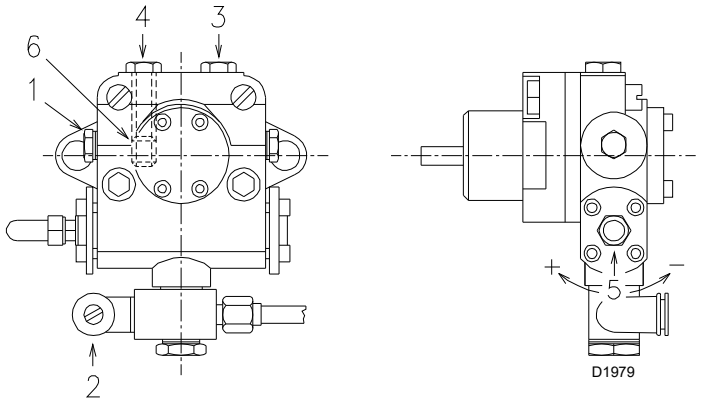

Fig. 26

Legend
1 Suction 1/2" NPT
2 Return 1/2" NPT
3 Pressure gauge attachmentG 1/4"
4 Vacuum gauge attachmentG 1/4"
5 Pressure adjustment screw
6 By-pass screw

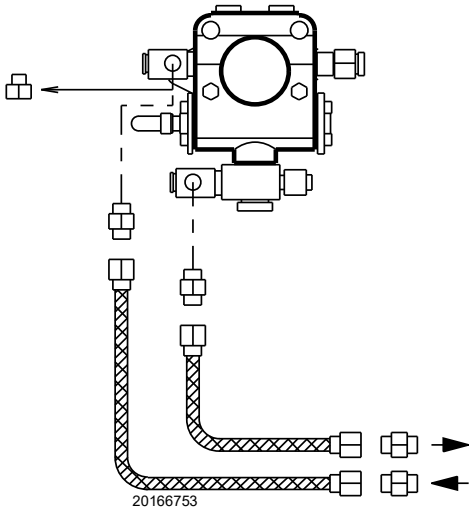

Fig. 27

4.12.5 Pump priming

WARNING

Before starting the burner, make sure that the tank return line is not clogged.

Obstructions in the line could cause the seal located on the pump shaft to break.

The time required for this operation depends upon the diameter and length of the suction tubing.

If the pump fails to prime at the first starting of the burner and the burner locks out, wait approx. 15 seconds, reset the burner, and then repeat the starting operation as often as required.

After 5 or 6 starting operations allow 2 or 3 minutes for the transformer to cool.

WARNING

The priming operation is possible because the pump is already full of fuel when it leaves the factory. If the pump has been drained, fill it with fuel through the opening on the vacuum meter prior to starting; otherwise, the pump will seize. Whenever the length of the suction piping exceeds 66 - 98 ft, the supply line must be filled using a separate pump.

4.13 Gas line

Explosion danger due to fuel leaks in the presence of a flammable source.

Precautions: avoid knocking, attrition, sparks and heat.

Make sure the fuel interception tap is closed before performing any operation on the burner.

WARNING

The fuel supply line must be installed by qualified personnel, in compliance with current standards and laws.

The main gas train must be connected to the gas attachment 1)(Fig. 28), using flange 2), gasket 3) and screws 4) supplied with the burner.

The main gas train can enter the burner from the right or left side, see Fig. 28.

Gas safety shut-off valves 5)-6)(Fig. 29) must be as close as possible to the burner to ensure gas reaches the combustion head within the safety time range.

The pilot gas train must be connected to the gas attachment 5)(Fig. 28) and can enter the burner from the top or bottom side.

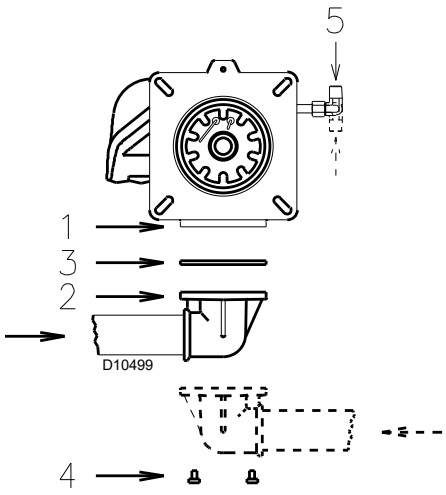

Fig. 28

4.14 Gas train

It must be type-approved according to UL Standards and is supplied separately from the burner.

WARNING

See the accompanying instructions for the adjustment of the gas train.

Check that there are no gas leaks.

Pay attention when handling the train: danger of crushing of limbs.

Make sure that the gas train is properly installed by checking for any fuel leaks.

The operator must use the required equipment during installation.

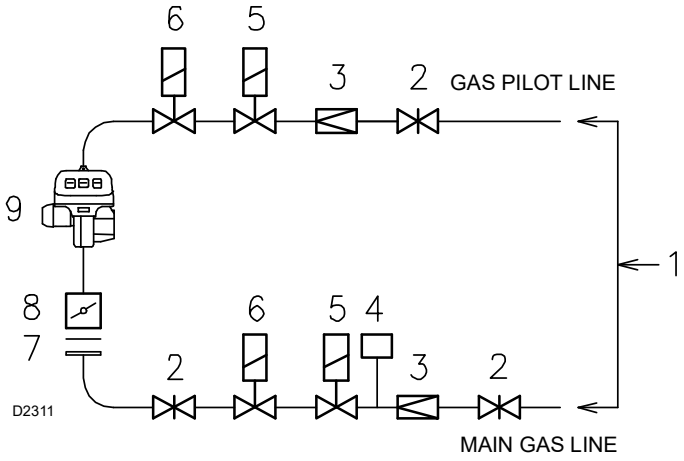

Fig. 29

Key
1 Gas input pipe
2 Manual valve
3 Pressure regulator
4 Low gas pressure switch
5 1st safety shut off valve
6 2nd safety shut off valve
7 Standard issue burner gasket with flange
8 Gas butterfly valve
9 Burner

4.14.1 Gas valve electrical connections

WARNING

Connections must be respected.

WARNING

Pay attention to the terminals during the connection of the valves.

The correct terminals are the orange ones, as shown in Fig. 31-A.

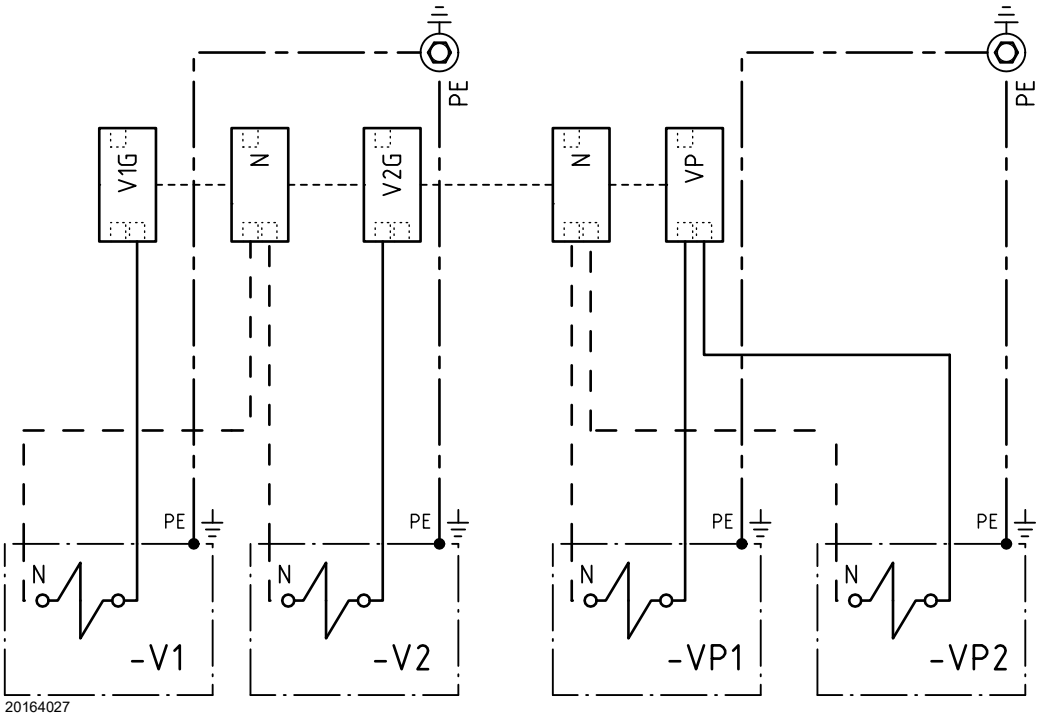

Fig. 30

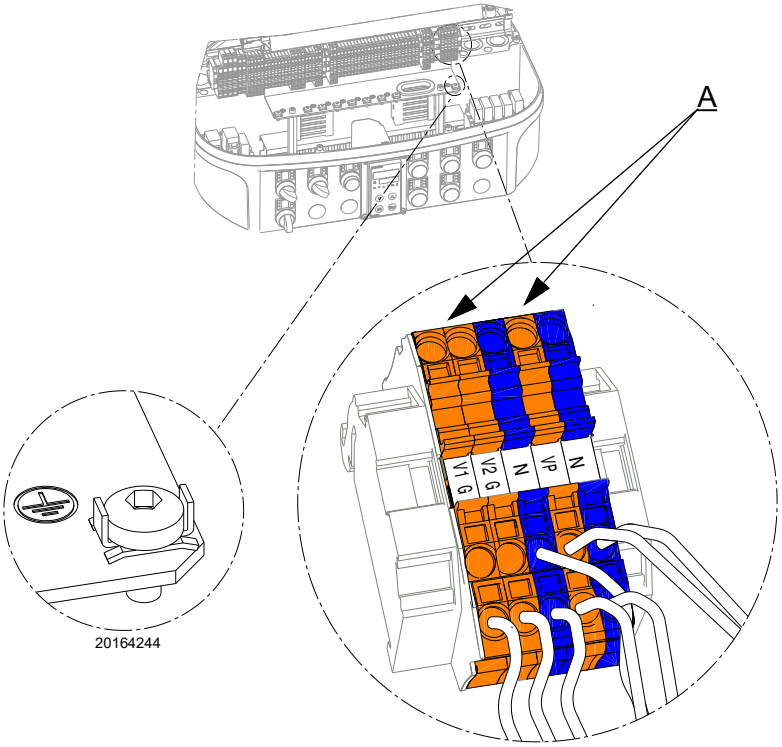

Fig. 31

WARNING

In case of installation of the vent valves (VV and VV1), the configuration will be that shown in Fig. 32.

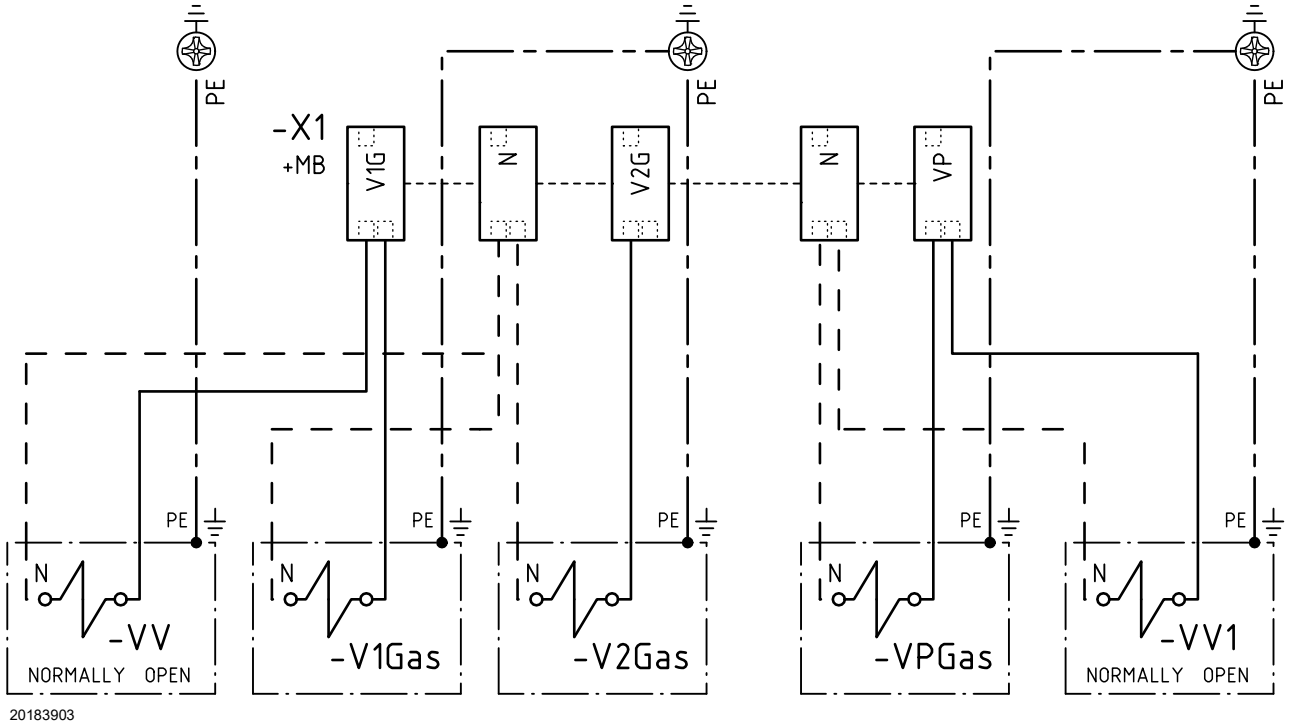

Fig. 32

4.14.2 Gas pressure

The adjacent diagrams are used to calculate manifold pressure taking into account combustion chamber pressure.

Gas manifold pressure measured at test point 1)(Fig. 34), with:
- combustion chamber at 0” WC
- burner operating at maximum output
- Combustion head adjusted as indicated in diagram (Fig. 15)

Calculate the approximate high fire output of the burner as follows:
– subtract the combustion chamber pressure from the gas pressure measured at test point 1)(Fig. 34).
– Find the nearest pressure value to your result in Fig. 33.
– Read off the corresponding output on the left.

Example:
- Maximum output operation
- Natural gas
- Gas pressure at test point 1)(Fig. 34) = 5.6” WC
- Pressure in combustion chamber = 1.2” WC

5.6 - 1.2 = 4.4” WC

A maximum output of 5600 MBtu/hr shown in diagram corresponds to 4.4” WC pressure.

This value serves as a rough guide, the effective delivery must be measured at the gas meter.

kW	MBtu/hr	Δp (“WC)*
930	3175	0.35
996	3400	0.39
1099	3750	0.50
1202	4100	0.63
1400	4780	0.86
1500	5120	1.00
1600	5460	1.15
1700	5800	1.30
1861	6350	1.50
2051	7000	1.65

Tab. M

*** The values are referred to the butterfly gas valve.**

WARNING

The data of thermal output and combustion head gas pressure are related to full open (90°) gas butterfly valve.

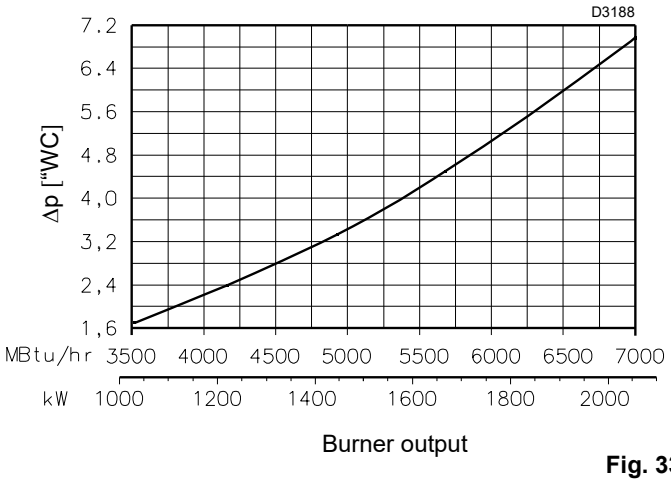

Fig. 33

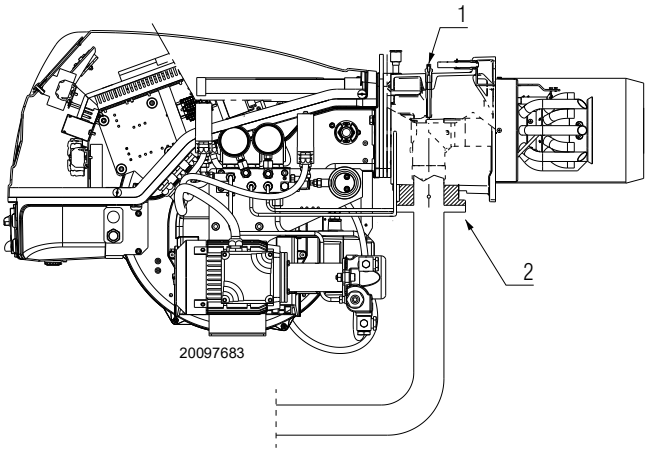

Fig. 34

4.15 Electrical wiring

Notes on safety for the electrical wiring

- ➤ The electrical wiring must be carried out with the electrical supply disconnected.
- ➤ Electrical wiring must be carried out by qualified personnel and in compliance with the regulations currently in force in the country of destination. Refer to the electrical layouts.
- ➤ The manufacturer declines all responsibility for modifications or connections different from those shown in the electrical layouts.
- ➤ Check that the electrical supply of the burner corresponds to that shown on the identification label and in this manual.
- ➤ Do not invert the neutral with the phase in the electrical supply line.
  Any inversion would cause a lockout due to firing failure.
- ➤ The electrical safety of the device is obtained only when it is correctly connected to an efficient earthing system, made according to current standards.
  It is necessary to check this fundamental safety requirement. In the event of doubt, have the electrical system checked by qualified personnel.
  Do not use the gas tubes as an earthing system for electrical devices.
- ➤ The electrical system must be suitable for the maximum input power of the device,as indicated on the label and in the manual, checking in particular that the section of the cables is suitable for the input power of the device.
- ➤ For the main power supply of the device from the electricity mains:
  - do not use adapters, multiple sockets or extensions;
  - use an omnipolar switch with an opening of at least $^1/_8$" (overvoltage category) between the contacts, as indicated by the current safety standards.
- ➤ Do not touch the device with wet or damp body parts and/or in bare feet.
- ➤ Do not pull the electric cables.

Before carrying out any maintenance, cleaning or checking operations:

DANGER — Disconnect the electrical supply from the burner by means of the main system switch.

DANGER — Turn off the fuel interception tap.

DANGER — Avoid condensate, ice and water leaks from forming.

4.15.1 Notes on terminals

On the electrical panel there terminals with a “spring” system. The opening of these terminals must be made via a suitable tool, using a flat-blade screwdriver of the correct size.
The clamp uses a pressurised opening system.

Clamp opening

- ➤ insert the correct screwdriver into the opening, pushing down until the hole for the cable is completely open.
- ➤ Insert the previously stripped cable and remove the screwdriver. Make sure the cable is securely fastened (Fig. 35).

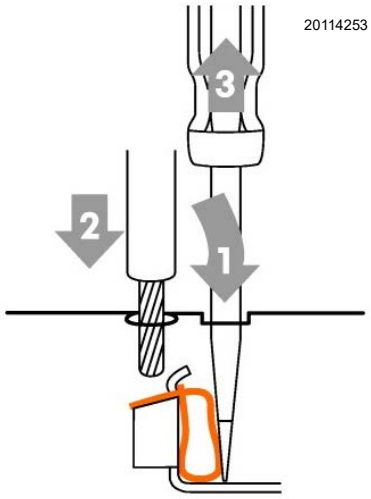

Fig. 35

4.15.2 Supply cables and external connections passage

All the cables to be connected to the burner are fed through the grommets. See Fig. 36.

The use of the cable grommets can take various forms. By way of example we indicate the following mode (according to **UL795**):

1 Three phase power supply with 3/4 inch cable grommet
2 Available: single phase power supply and other devices with 1/2 inch cable grommet
3 Available: consents/safety, minimum gas pressure switch, gas valves and other devices with 3/8 inch cable grommet
4 Available: hole for M16
5 Available for ground terminals

A Variable speed sensor
B Maximum gas pressure switch
C UV sensor
D Air servomotor
E Fuel servomotor
F Air pressure switch
G Oil valve
H Oil pressure switch
I Pump motor

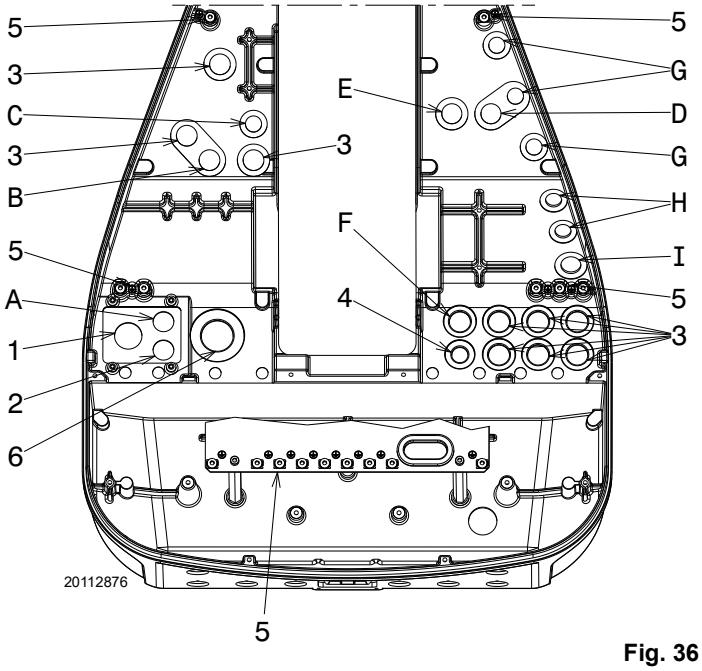

Fig. 36

4.15.3 Cable shielding

WARNING

It is very important to shield the motor cable 1) as shown in Fig. 37.

It is very important to fix the cable shielding as shown in Fig. 37.

The connection from the Inverter to LMV36... must be done as shown in Fig. 37.

WARNING

The control panel is in compliance with UL508A.

After carrying out maintenance, cleaning or checking operations, reassemble the hood and all the safety and protection devices of the burner.

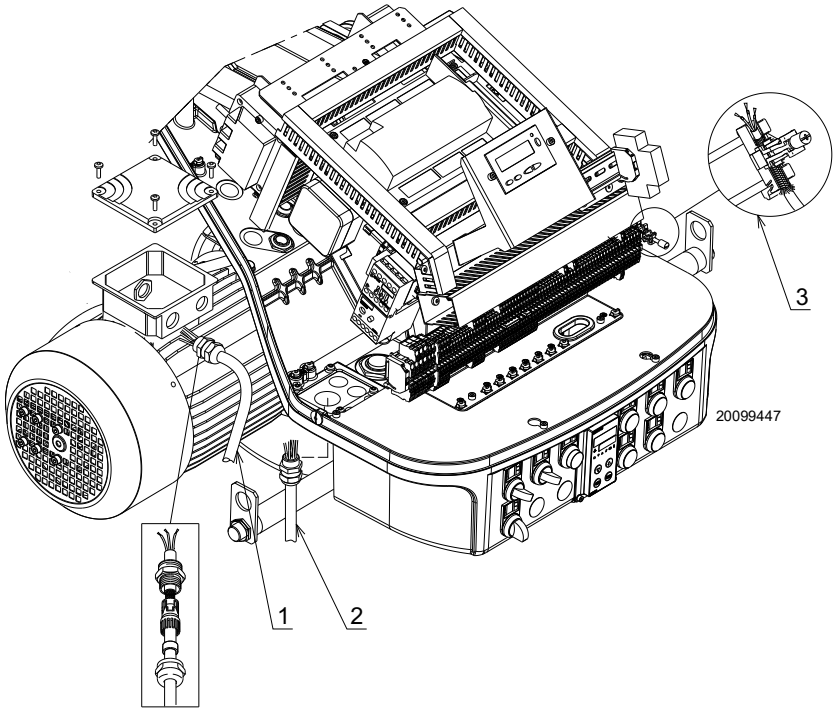

Fig. 37

Key (Fig. 37)
1 Motor supply cable
2 Single phase supply cable
3 Clamp for connection of controls cable shielding from Inverter

4.15.4 Inverter connection

WARNING

Following, it is reported an example how to connect the Inverter.
For further information, please refer to the relevant Inverter instruction manual.

Typical installation

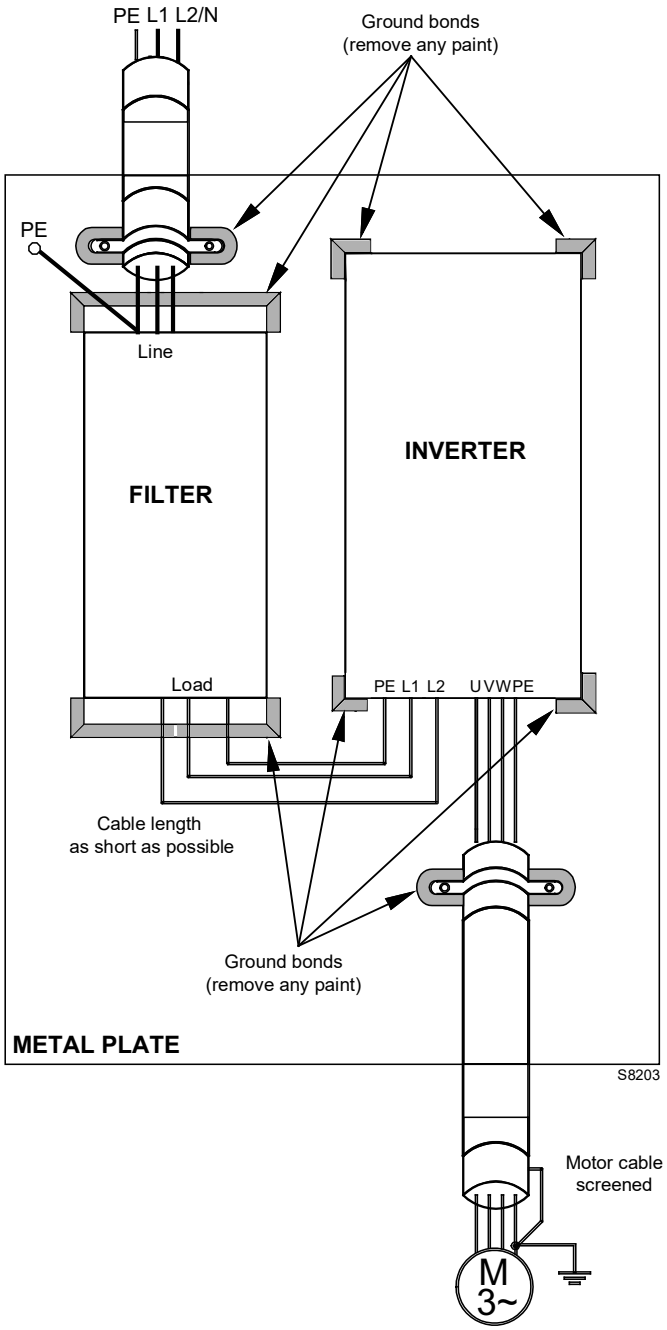

Fig. 38

Treatment of cables

Countermeasures against cable noise

The treatment of cables is the most important countermeasure. The machinery manufacturers are requested

to examine the current structure of the cable lead - in.

- ➤ Use cables with woven screen
- ➤ The screen of the cable should be earthed with a large area.
- ➤ It is desirable to earth the screen of the cable by clamping the cable to the earth plate.
- ➤ The screen must be earthed on both side of the cable (take care for good earthing system).

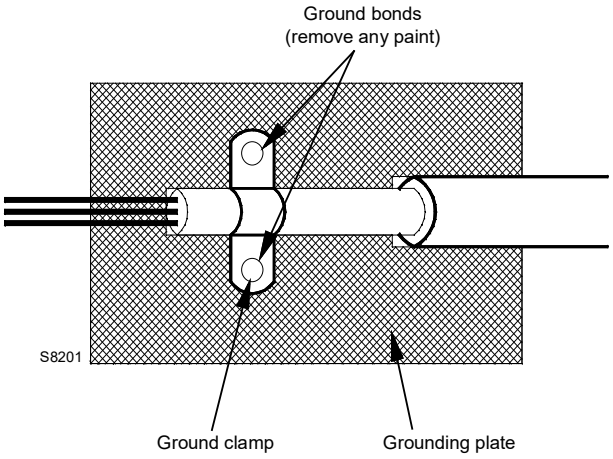

Fig. 39

Example:

Number 1,2,3 show not proper ways to earth a cable screen.

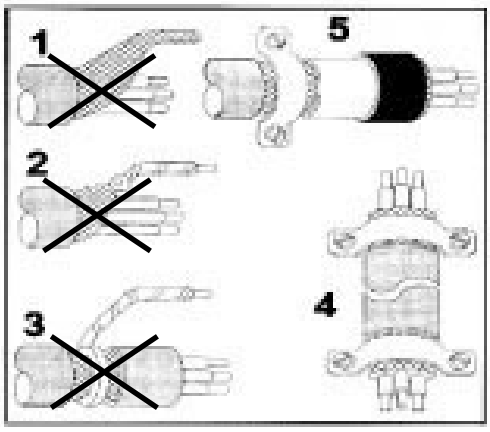

S8202

Fig. 40

4.16 Calibración de relé de sobrecarga y protector de motor

Depending on the burner type, there are two different overload relays:
- electro-mechanical overload relay (used for single phase motors);
- electronic relay (used for three phase motors)
- motor protector

4.16.1 Electro-mechanical overload relay

The electro-mechanical overload relay (Fig. 41) is used to avoid damage to the motor owing to a strong increase in absorption or the lack of a phase.

For the calibration, refer to the table given in electrical layout. If the minimum value of the scale of the overload relay is greater than the rating absorption of the motor, protection is still ensured.

➤ To reset, in the case of an intervention of the overload relay, press the button "**RESET**" (Fig. 41).

➤ The button "**STOP**" (Fig. 41) opens the NC (95-96) contact and stops the motor.

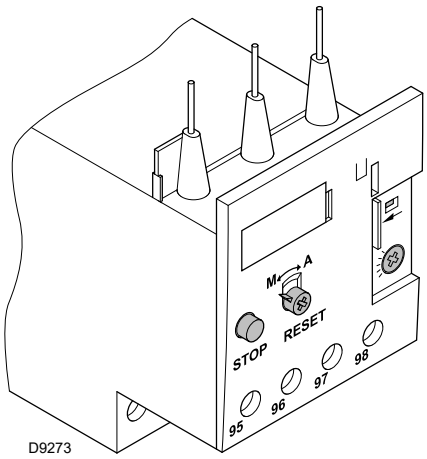

Fig. 41

➤ To test the overload relay, insert a screwdriver in the window "**TEST**" (Fig. 42) and move it in the sense of the arrow (towards right).

Automatic resetting can be dangerous.

This action is not provided for the burner operation.

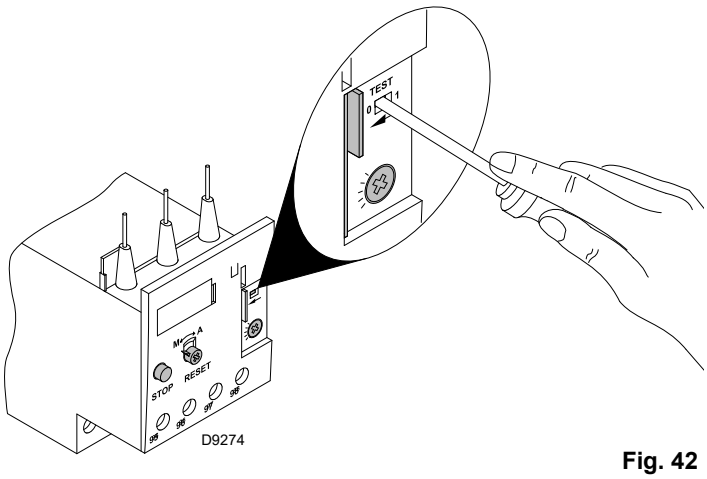

Fig. 42

4.16.2 Electronic relay

➤ To reset, in the case of an intervention of the electronic relay, press the button "**RESET**" (Fig. 43).

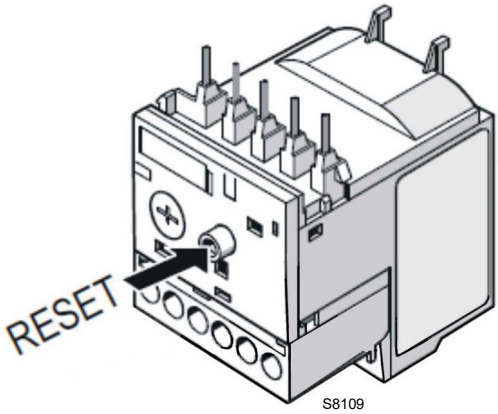

Fig. 43

There are two different solution to test the electronic relay:

➤ **Device test (Fig. 44)**
Push slowly the button in the window with a little screwdriver.

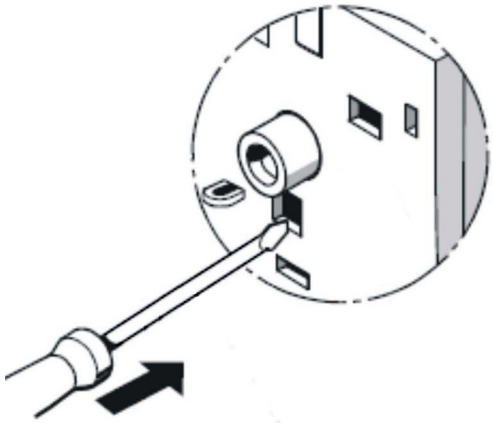

Fig. 44

➤ **Contact test NC (95-96) and NO (97-98)(Fig. 45)**
Insert in the window a little screwdriver and move it in the sense of the arrow.

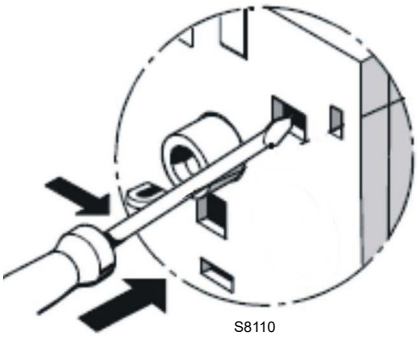

Fig. 45

4.17 Motor connection at 208-230 or 460V

WARNING:
the motors, manufactured for 208-230/460 **IE3 NEMA Premium Efficiency** voltage, have the same connection than **IE2/Epact** motors.

IE2/Epact - IE3 NEMA Premium Efficiency

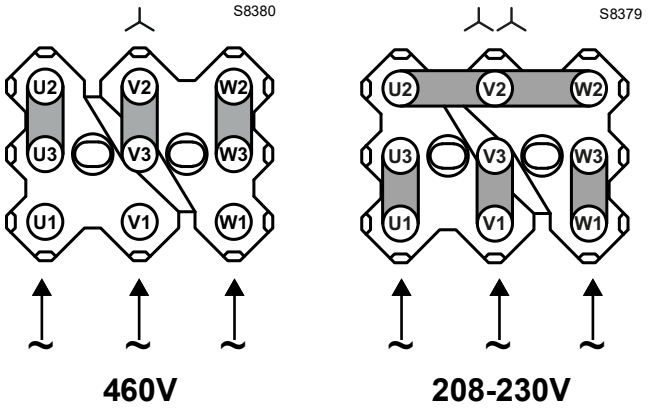

Fig. 46

4.18 Motor connection at 575V

WARNING:
the motors, manufactured for 575V **IE3 NEMA Premium Efficiency** voltage, have the same flame control base of the **IE1** and **IE2/Epact** motors.
Please pay attention to the indications in case of maintenance or substitution.

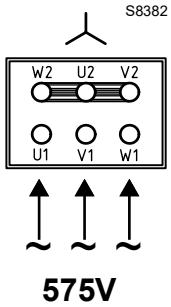

Fig. 47

4.19 Motor rotation

As soon as the burner starts up, go in front of the cooling fan of the fan motor and check it is rotating anticlockwise (Fig. 48).

If this is not the case:

➤ set the burner switch to “0” (OFF) and wait for the flame control to carry out the switch-off phase.

DANGER

Disconnect the electrical supply from the burner by means of the main system switch.

➤ Invert the phases on the three-phase motor power supply.

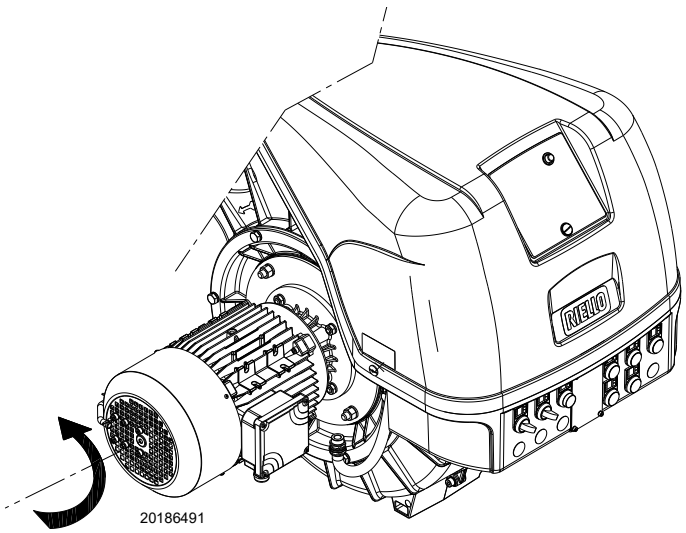

Fig. 48

5 Start-up, calibration and operation of the burner

5.1 Notes on safety for the first start-up

WARNING

The first start-up of the burner must be carried out by qualified personnel, as indicated in this manual and in compliance with the standards and regulations of the laws in force.

WARNING

Check the correct working of the adjustment, command and safety devices.

WARNING

Refer to paragraph "Safety test - with gas ball valve closed" on page 41 before the first start-up.

5.2 Adjustments prior to ignition (light oil)

WARNING

It is recommended to adjust first the light oil burner and then the gas burner.

Carry out the fuel change with burner off.

The optimum calibration of the burner requires an analysis of the flue gases at the boiler outlet and interventions on the following points.

5.2.1 Combustion head setting

The setting of the combustion head depends exclusively on the maximum delivery of the burner.

See information on page 20.

In case of high altitude site, head setting must refer to the "corrected capacity" according procedure described at page 10.

5.2.2 Nozzle

See information on page 21.

5.2.3 Pump adjustment

No settings are required for the pump, which is set to 290 PSI by the manufacturer. This pressure must be checked and adjusted (if required) after the burner has been ignited.

The only operation required in this phase is the application of a pressure gauge on the appropriate pump attachment.

5.2.4 Air damper adjustment

The first time the burner is fired leave the factory setting unchanged for both low and high fire operation.

5.3 Burner firing

Having completed the checks indicated in the previous heading, the pilot of the burner should fire.

If the motor starts but the flame does not appear and the flame safeguard goes into lock-out, reset and wait for a new firing attempt.

Pilot adjustment has been illustrated on Fig. 21, page 23.

Having adjusted the pilot, reconnect the main valve and ignite the main flame; it might require several attempts to purge the air from the gas lines or to adjust the valve with little gas.

Once the burner has fired, now proceed with calibration operations.

5.4 Burner calibration

The optimum calibration of the burner requires an analysis of the flue gases at the boiler outlet.

Adjust successively:

- ➤ Firing output
- ➤ Maximum burner output
- ➤ Minimum burner output
- ➤ Intermediate outputs between low and high fire
- ➤ Air pressure switch
- ➤ Minimum gas pressure switch

5.5 Adjustments before first firing (gas)

Adjustment of the combustion head has been illustrated on page 20.

In addition, the following adjustments must also be made:

- ➤ open manual valves up-stream from the gas train.
- ➤ Purge the air from the gas line.
- ➤ Adjust the low gas pressure switch to the start of the scale (Fig. 54, page 38).
- ➤ Adjust the high gas pressure switch to the upper limit of the scale (Fig. 49).
- ➤ Adjust the air pressure switch to the zero position of the scale (Fig. 52, page 37).
- ➤ Fit a U-type manometer (Fig. 49) to the gas pressure test point on the sleeve. The manometer readings are used to calculate MAX. burner power using the diagrams on page 29.

Before starting up the burner it is good practice to adjust the gas train so that ignition takes place in conditions of maximum safety, i.e. with gas delivery at the minimum.

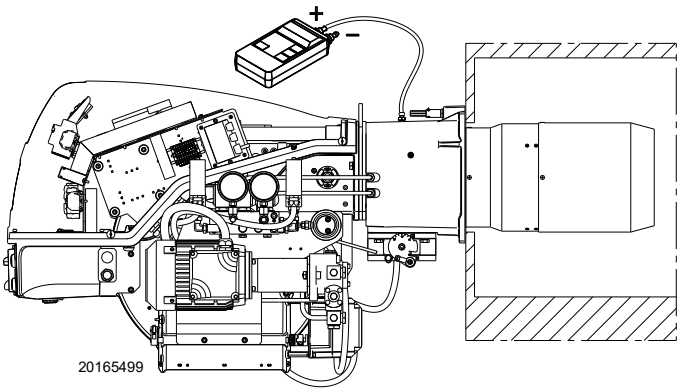

Fig. 49

5.6 Burner start-up

Feed electricity to the burner via the disconnecting switch on the boiler panel.

Close the thermostats/pressure switches, set the parameters on the RWF 55 regulator.

Please refer to the specific manual for this operation.

Turn the switch to position **"ON"** (Fig. 50) and turn the switch of to position **"LOCAL"** and turn the switch to position "**OIL**" for oil operation and "**GAS**" for gas operation.

DANGER

Make sure that the lamps or testers connected to the solenoids, or indicator lights on the solenoids themselves, show that no voltage is present. If voltage is present, stop the burner **immediately** and check the electrical wiring.

WARNING

For the start-up procedure and the parameters calibration, refer to the specific instruction manual of the LMV36... electronic cam supplied with the burner.

5.6.1 Adjusting oil/air delivery

- ➤ Switch to the light oil operation.
- ➤ During the ignition, move slowly with an approximate adjustment to the oil servomotor at maximum 90°.
- ➤ Adjust the maximum pressure on the return nozzle through the "nut and lock-nut" 5)(Fig. 19, page 22).
- ➤ Adjust the combustion parameter with the air servomotor and store the maximum combustion point.
- ➤ Complete the procedure slowly, synchronizing the combustion with the two servomotors.
- ➤ Store the different setting points.

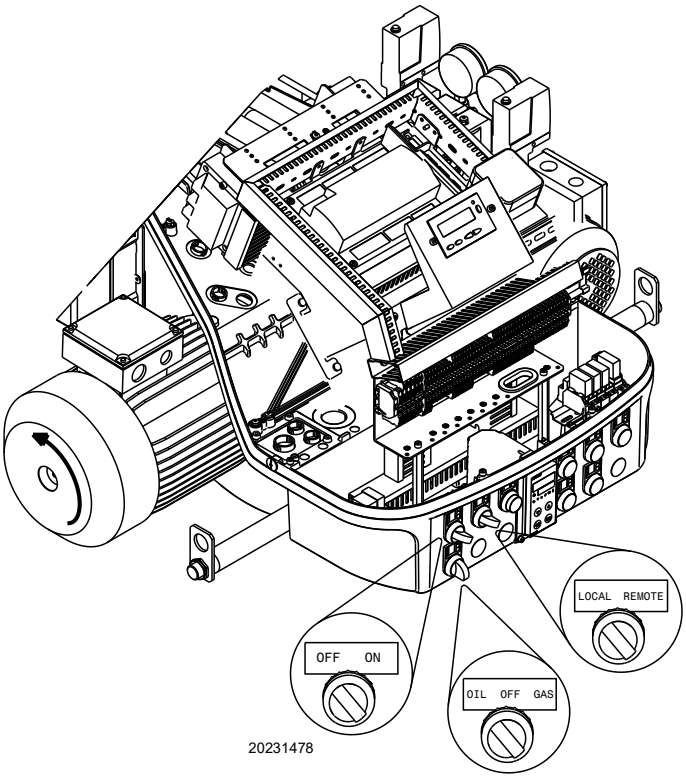

Fig. 50

5.6.2 Adjusting gas/air delivery

- ➤ Move slowly towards the maximum output (butterfly gas valve completely open);
- ➤ adjust the required maximum output with the gas pressure stabilizer;
- ➤ adjust the combustion parameters with the air servomotor and store the maximum combustion point;
- ➤ complete the procedure slowly, synchronizing the combustion with the two servomotors and storing the different setting points.

5.7 Final calibration of the pressure switches

5.7.1 Air pressure switch

The air pressure switch is connected in differential (Fig. 52) and is activated by both the negative pressure of the air intake and the air pressure from the fan.

Adjust the air pressure switch (Fig. 51) after having performed all other burner adjustments with the air pressure switch set to the min. of the scale.

With the burner operating at low fire, adjust the pressure switch by slowly turning the relative knob clockwise until the burner locks out.

Then turn the knob counter-clockwise about 20% of the set point and start-up the burner again to ensure the set point is correct.

If the burner locks out again, turn the knob counter-clockwise a little bit more.

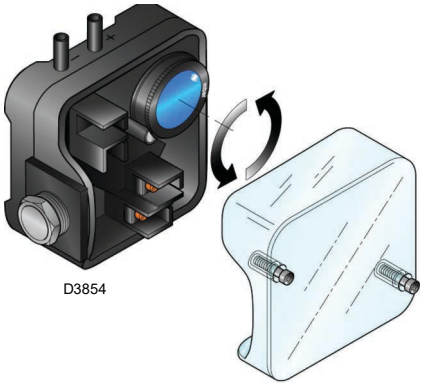

Fig. 51

5.7.2 Maximum gas pressure switch

Adjust the maximum gas pressure switch (Fig. 54) after making all other burner adjustments with the maximum gas pressure switch set to the end of the scale.

To calibrate the maximum gas pressure switch, open the tap and then connect a pressure gauge to its pressure test point.

The maximum gas pressure switch must be regulated to a value no higher than 30% of the measurement read on the gauge when the burner is working at maximum output.

After making the adjustment, remove the pressure gauge and close the tap.

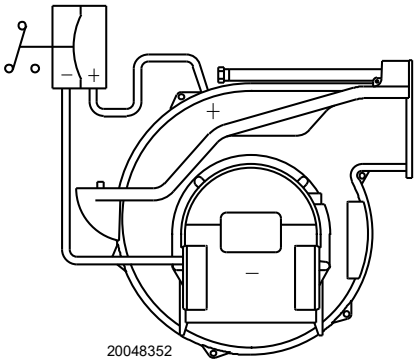

Fig. 52

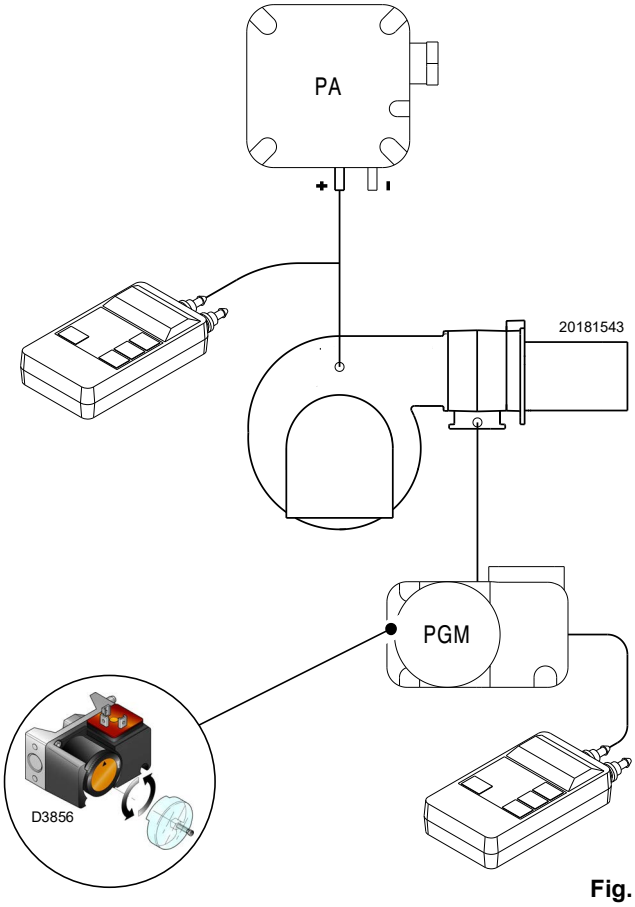

Fig. 53

5.7.3 Minimum gas pressure switch

The purpose of the minimum gas pressure switch is to prevent the burner from operating in an unsuitable way due to too low gas pressure.

Adjust the minimum gas pressure switch (Fig. 54) after having adjusted the burner, the gas valves and the gas train stabiliser. With the burner operating at maximum output:

– install a pressure gauge downstream of the gas train stabiliser (for example at the gas pressure test point on the burner combustion head);
– choke slowly the manual gas cock until the pressure gauge detects a decrease in the pressure read of about 0.1 kPa (1 mbar). In this phase, verify the CO value which must always be less than 100 mg/kWh (93 ppm).
– Increase the adjustment of the gas pressure switch until it intervenes, causing the burner shutdown;
– remove the pressure gauge and close the cock of the gas pressure test point used for the measurement;
– open completely the manual gas cock.

WARNING

1 kPa = 10 mbar

5.7.4 Low oil pressure switch

The low oil pressure switch is factory set to 261 PSI (18 bar).

If the oil pressure goes down this value in the delivery piping, the pressure switch stops the burner.

Burner starts again automatically if the pressure goes above 261 PSI (18 bar) after burner start up.

For the adjustment, see Fig. 55.

5.7.5 High oil pressure switch

The high oil pressure switch is factory set to 43.5 PSI (3 bar).

If the oil pressure goes above this value in the return piping, the pressure switch stops the burner.

Burner starts again automatically if the pressure goes down under 43.5 PSI (3 bar) after burner shut down.

If a loop circuit with Px pressure feeds the burner, the pressure switch should be adjusted to Px + 43.5 PSI.

For the adjustment, see Fig. 56.

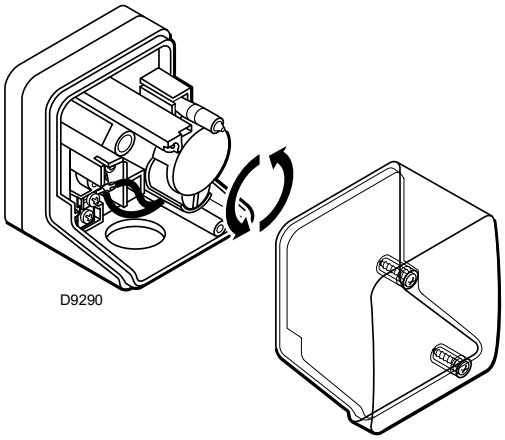

Fig. 54

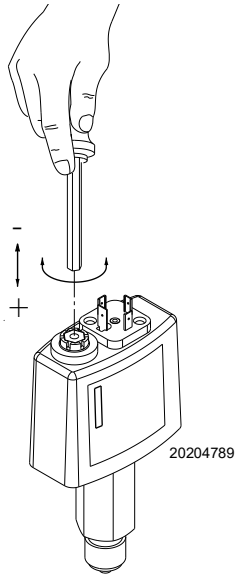

Fig. 55

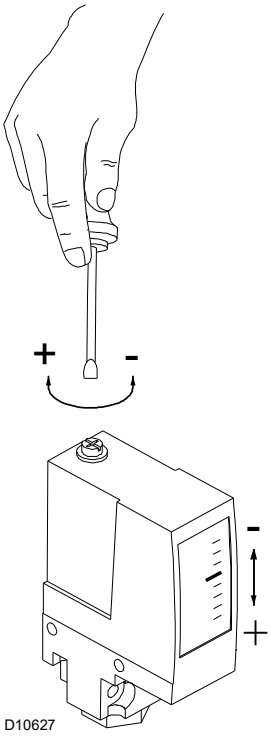

Fig. 56

5.8 Burner starting

- Operating control closes, the motor starts. The pump 3)(Fig. 57) draws the fuel from the tank through the piping 1) and pumps it under pressure for delivery. The piston 4) rises and the fuel returns to the tank through the piping 5) - 7). The screw 6) closes the by-pass heading towards suction and the de-energized solenoid valves 8) - 9) - 2) close the passage to the nozzle.
- Air damper and pressure regulator are positioned on MIN output.
- Ignition electrode strikes a spark.
- Solenoid valves 8) - 9) - 2) open; the fuel passes through the piping 10) and filter 11), and enters the nozzle. A part of the fuel is then sprayed out through the nozzle, igniting when it comes into contact with the spark: flame at a low output level; the rest of the fuel passes through piping 12 at the pressure adjusted by the regulator 13, then, through piping 7), it goes back into the tank.
- The spark goes out.
- The starting cycle ends.

5.8.1 Steady state operation

At the end of the starting cycle, the servo-motor control then passes to load control for boiler pressure or temperature.

- If the temperature or pressure is low (and the load control is consequently closed), the burner progressively increases output up to MAX.
- If subsequently the temperature or pressure increases until the load control opens, the burner progressively decreases output down to MIN.
- The burner shuts off when demand for heat is less than the heat supplied by the burner in the MIN output.
- The servomotor returns to the 0° angle limited by contact with cam 2. The air damper closes completely to reduce thermal dispersion to a minimum.

Every time output is changed, the servomotor automatically modifies oil delivery (pressure regulator) and air delivery (fan damper).

5.8.2 Firing failure

- If the burner does not fire, it goes into lock-out within 3 sec. of the opening of the light oil valve.
- If the flame should go out for accidental reasons during operation, the burner will lock out in 1 s.

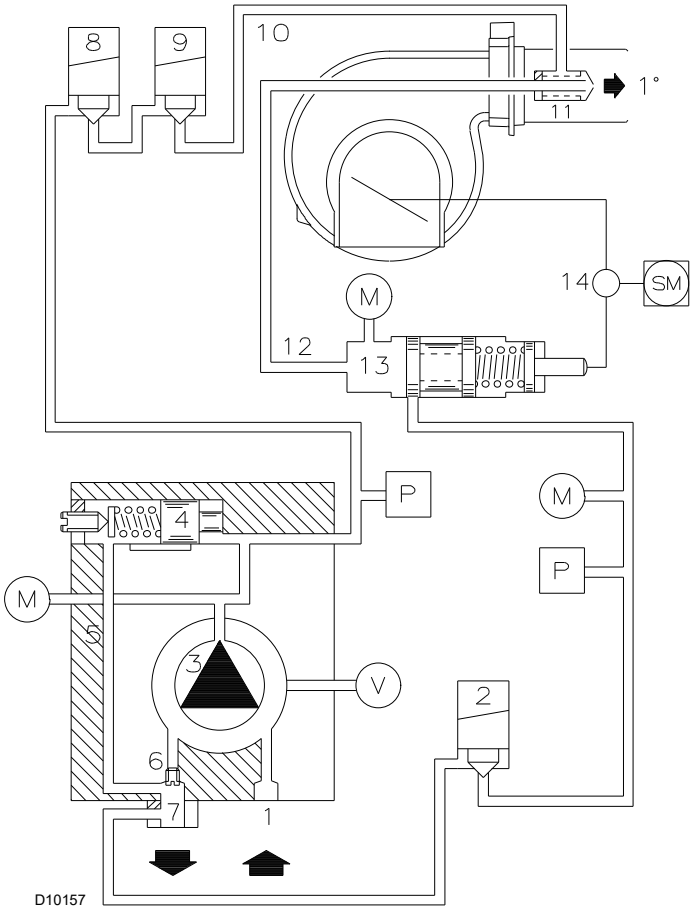

Fig. 57

5.9 Flame signal measurement

Check the flame signal through the parameter 954, as indicated in Fig. 58. The displayed value is expressed in percentage.

The value during the operation must be higher than 24%. If at the burner start-up the value is higher or equal of 18%, the burner locks out due to the extraneous light.

For further and specific information, please refer to the specific instruction manual.

The display (Fig. 58) shows parameter **954**: flashing on the left. On the right, the flame's intensity is displayed as a percentage. Example: **954: 0.0**

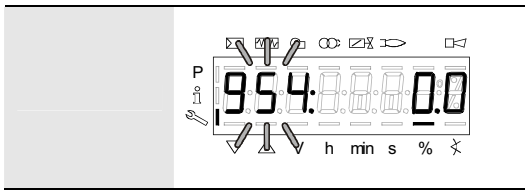

S8171

Fig. 58

5.10 Final checks (with the burner working)

➤ Open the control limit operation ➤ Open the high limit operation	⇨	The burner must stop
➤ Rotate the maximum gas pressure switch knob to the minimum end-of-scale position ➤ Rotate the air pressure switch knob to the maximum end of scale position ➤ Rotate the maximum oil pressure switch at the minimum of the scale	⇨	The burner must stop in lockout
➤ Switch off the burner and disconnect the voltage ➤ Disconnect the minimum gas pressure switch ➤ Rotate the minimum low oil pressure switch at the maximum of the scale	⇨	The burner must not start
➤ Cover the flame sensor	⇨	The burner must stop in lockout due to firing failure

Tab. N

WARNING

Make sure that the mechanical locking systems on the different adjustment devices are fully tightened.

6 Maintenance

6.1 Notes on safety for the maintenance

The periodic maintenance is essential for the good operation, safety, yield and duration of the burner.

It allows you to reduce consumption and polluting emissions and to keep the product in a reliable state over time.

DANGER

The maintenance interventions and the calibration of the burner must only be carried out by qualified, authorised personnel, in accordance with the contents of this manual and in compliance with the standards and regulations of current laws.

Before carrying out any maintenance, cleaning or checking operations:

DANGER

Disconnect the electrical supply from the burner by means of the main system switch.

DANGER

Turn off the fuel interception tap.

Wait for the components in contact with heat sources to cool down completely.

6.2 Maintenance programme

6.2.1 Maintenance frequency

The gas combustion system should be checked at least once a year by a representative of the manufacturer or another specialised technician.

6.2.2 Safety test - with gas ball valve closed

It is fundamental to ensure the correct execution of the electrical connections between the gas solenoid valves and the burner to perform safely the commissioning.

For this purpose, after checking that the connections have been carried out in accordance with the burner's electrical diagrams, an ignition cycle with closed gas ball valve -dry test- must be performed.

1 The manual ball gas valve must be closed
2 The electrical contacts of the burner limit switch need to be closed
3 Ensures closed the contact of the low gas pressure switch
4 Make a trial for burner ignition

The start-up cycle must be as follows:

– Starting the fan for pre-ventilation
– Performing the gas valve seal control, if provided
– Completion of pre-ventilation
– Arrival of the ignition point
– Power supply of the ignition transformer
– Electrical Supply of solenoid gas valves

Since the manual gas ball valve is closed, the burner will not light up and its flame control will go to a safety lockout condition.

The actual electrical supply of the solenoid gas valves can be verified by inserting a tester. Some valves are equipped with light signals (or close/open position indicator) that turn on at the same time as their power supply.

WARNING

IF THE ELECTRICAL SUPPLY OF THE GAS VALVES OCCURS AT UNEXPECTED TIMES, DO NOT OPEN MANUAL GAS BALL VALVE, SWITCH OFF POWER LINE; CHECK THE WIRES; CORRECT THE ERRORS AND REPEAT THE COMPLETE TEST.

6.2.3 Checking and cleaning

The operator must use the required equipment during maintenance.

Combustion

The optimum calibration of the burner requires an analysis of the flue gases. Significant differences with respect to the previous measurements indicate the points where more care should be exercised during maintenance.

Combustion head

Open the burner and make sure that all components of the combustion head are in good condition, not deformed by the high temperatures, free of impurities from the surroundings and correctly positioned. If in doubt, disassemble the elbow fitting.

Burner

Check for excess wear or loose screws. Also make sure that the screws securing the electrical leads in the burner connections are fully tightened.

Clean the outside of the burner.

Flame inspection window

Clean the flame inspection window 1)(Fig. 59).

Nozzles

It is advisable to replace nozzles once a year during periodical maintenance.

Do not clean the nozzle openings;

Hoses

Check that these are in good conditions.

Fan

Check to make sure that no dust has accumulated inside the fan or on its blades, as this condition will cause a reduction in the air flow rate and provoke polluting combustion.

Flame sensor

In order to reach the flame sensor, proceed as follows:

➤ extract the sensor 2);

➤ clean the glass cover from any dust that may have accumulated.

Gas leaks

Make sure that there are no gas leaks on the pipework between the gas meter and the burner.

Gas filter

Change the gas filter when it is dirty.

Boiler

Clean the boiler as indicated in its accompanying instructions in order to maintain all the original combustion characteristics intact, especially the flue gas temperature and combustion chamber pressure.

Fuel tank

Approximately every 5 years, suck any water on the bottom of the tank using a separate pump.

Combustion

Adjust the burner if the combustion values found at the beginning of the operation do not comply with the regulations in force, or at any rate, do not correspond to good combustion.

6.2.4 Safety components

The safety components must be replaced at the end of their life cycle indicated in Tab. O. The specified life cycles do not refer to the warranty terms indicated in the delivery or payment conditions.

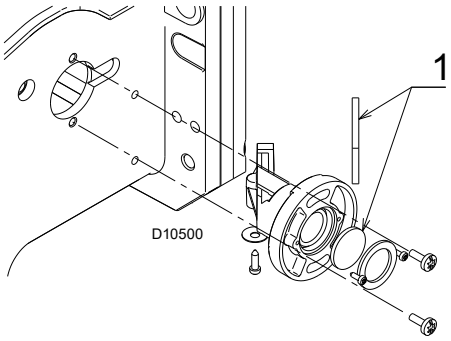

Fig. 59

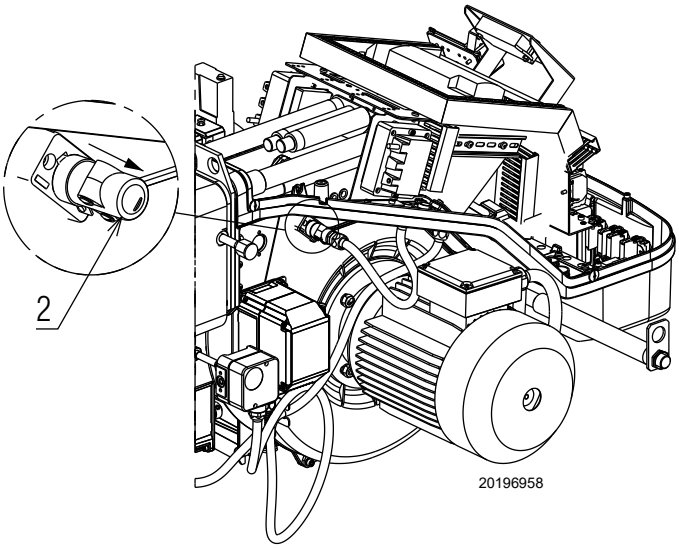

Fig. 60

Safety component	Life cycle
Flame control	10 years or 250,000 operation cycles
Flame sensor	10 years or 250,000 operation cycles
Gas valves (solenoid)	10 years or 250,000 operation cycles
Pressure switches	10 years or 250,000 operation cycles
Pressure adjuster	15 years
Servomotor (electronic cam) (if present)	10 years or 250,000 operation cycles
Oil valve (solenoid) (if present)	10 years or 250,000 operation cycles
Oil regulator (if present)	10 years or 250,000 operation cycles
Oil pipes / couplings (metallic) (if present)	10 years
Fan impeller	10 years or 500,000 start-ups

Tab. O

6.3 Opening the burner

DANGER

Disconnect the electrical supply from the burner by means of the main system switch.

DANGER

Close the fuel interception tap.

Wait for the components in contact with heat sources to cool down completely.

- ➤ Loosen screws 1)(Fig. 61) and with draw the cover 2);
- ➤ disengage the swivel coupling 7) from the graduated sector;
- ➤ disconnect the light-oil pipes 8);
- ➤ remove screws 3) and pull the burner back by about 4” on the slide bars. disconnect the electrode leads;
- ➤ install the extension bars 31)(Fig. 6, page 12) and re-screw the 2 screws and the safety plate (Fig. 12, page 19);
- ➤ pull the burner fully back.

Now extract the internal part 5) after having removed the screw 6).

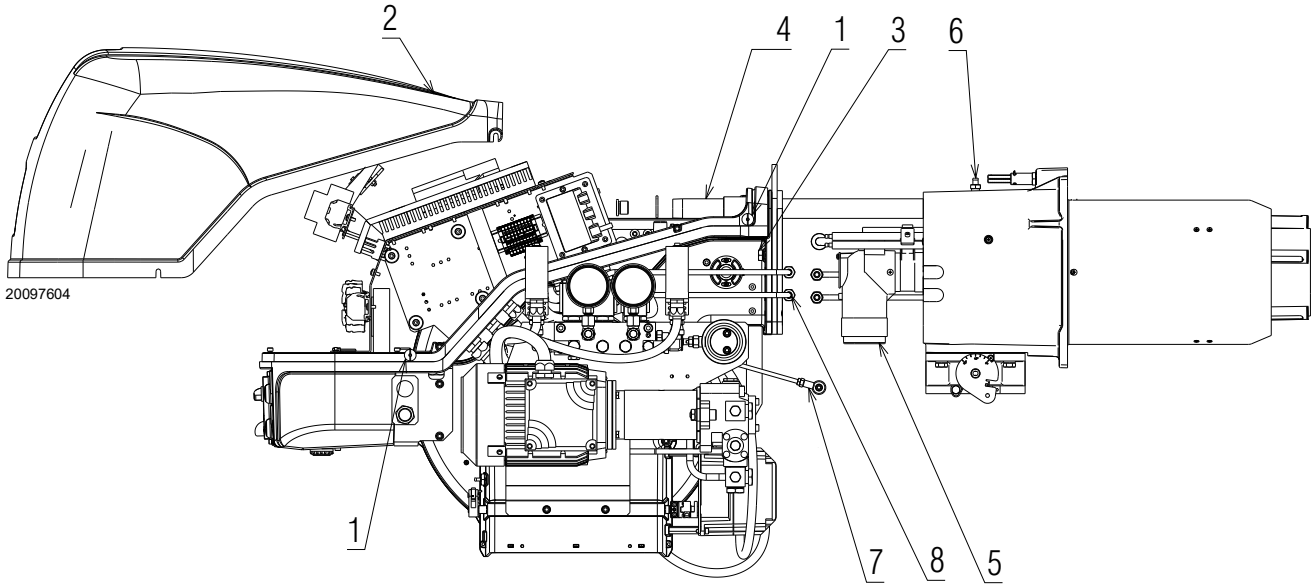

Fig. 61

6.4 Closing the burner

To close the burner proceed as follows:

- ➤ push the burner until it is about 4” from the sleeve;
- ➤ re-connect the leads;
- ➤ remove the extension bars 31)(Fig. 6, page 12);
- ➤ slide in the burner until it comes to a stop;
- ➤ refit screws 3)(Fig. 61) and pull the leads gently out until they are slightly stretched;
- ➤ re-couple the swivel coupling 7) to the graduated sector;
- ➤ reconnect the light-oil pipes;
- ➤ re-screw the 2 screws and the safety plate (Fig. 12, page 19).

After carrying out maintenance, cleaning or checking operations, reassemble the hood and all the safety and protection devices of the burner.

7 Faults - Possible causes - Solutions

If faults arise in ignition or operations, the burner performs a "safety stop", which is signalled by the red burner lockout LED.

The display visualises alternately the lockout code and the relative diagnostic. To reset the start-up conditions, refer to the “Reset procedure” indicated in the flame control manual supplied.

When the burner starts again, the red LED goes out and the flame control is reset.

WARNING In the event of a burner lockout, more than two consecutive burner reset operations could cause damage to the installation. On the third lockout, contact the Aftersales Service.

DANGER If further lockouts or burner faults occur, interventions must only be made by qualified, authorised personnel (as indicated in this manual, and in compliance with the laws and regulations currently in force).

A Appendix - Spare parts

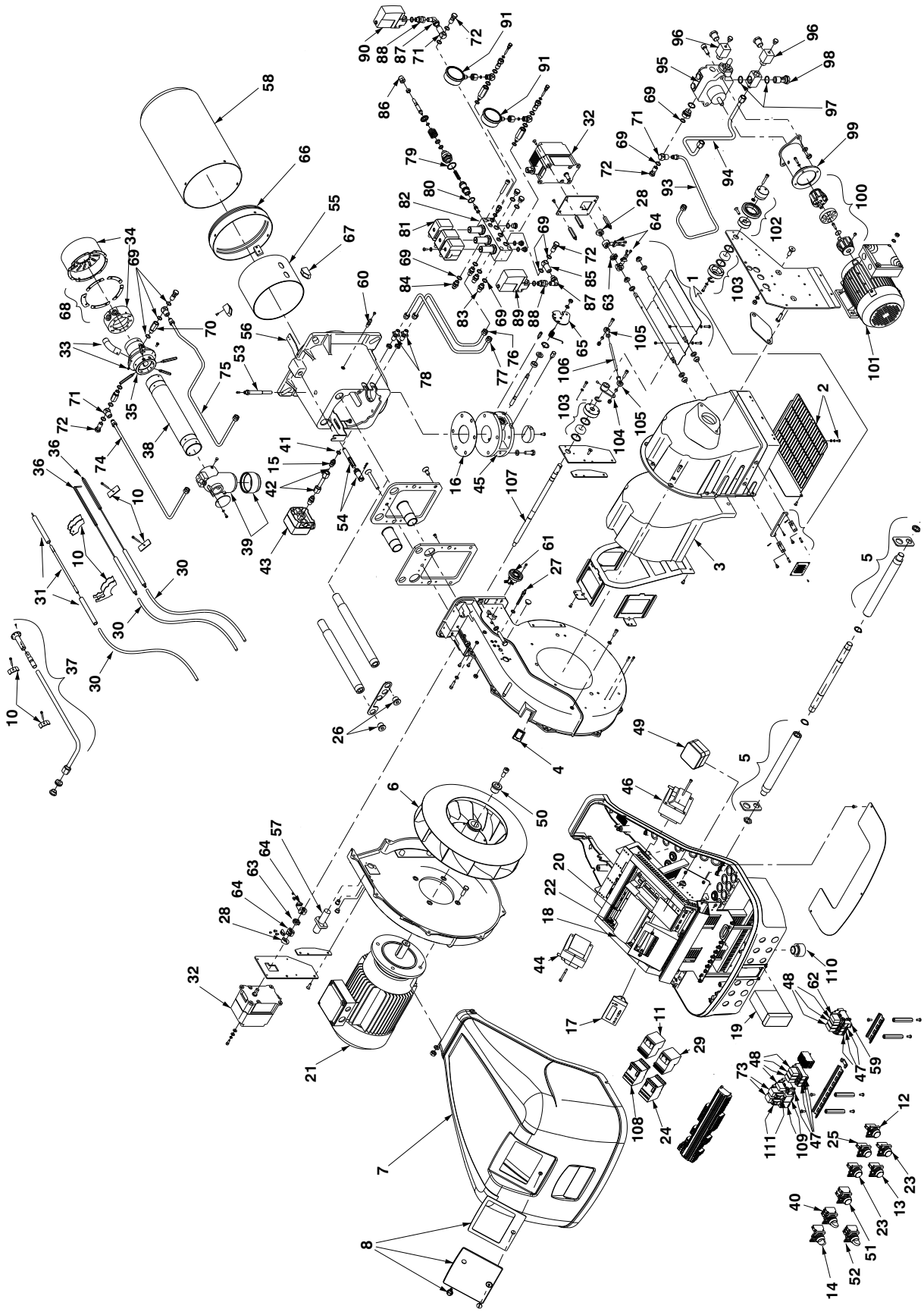

N.	CODE	20171526	20206041	20171527	20171662	20206039	20206040	DESCRIPTION	BURNER SERIAL NUMBER	*
1	**20073258**	•	•	•	•	•	•	AIR DAMPER ASSEMBLY		
2	**3013683**	•	•	•	•	•	•	PROTECTION GRATE		
3	**3013682**	•	•	•	•	•	•	SOUND DAMPING		
4	**3003763**	•	•	•	•	•	•	INSPECTION WINDOW		
5	**3013686**	•	•	•	•	•	•	BAR EXTENSION		
6	**3012976**	•	•	•	•	•	•	FAN		C
7	**20086561**	•	•	•	•	•	•	COVER		B
8	**20075921**	•	•	•	•	•	•	VIEWING PORT		
10	**20028328**	•	•	•	•	•	•	SUPPORT		A
11	**20118870**	•	•	•	•	•	•	PUMP THERMAL RELAY 460-575V		C
11	**20152142**			•	•	•	•	PUMP THERMAL RELAY 230V		
12	**20027018**	•	•	•	•	•	•	RED SIGNAL LIGHT		A
13	**20027020**	•	•	•	•	•	•	YELLOW SIGNAL LIGHT		A
14	**20027021**	•	•	•	•	•	•	SELECTOR SWITCH		C
15	**3003220**	•	•	•	•	•	•	CONNECTOR		C
16	**3005482**	•	•	•	•	•	•	SEAL		B
17	**3013926**	•	•	•	•	•	•	DISPLAY		
18	**20028329**	•	•	•	•	•	•	flame control		B
19	**20096592**	•	•	•	•	•	•	POWER REGULATOR		
20	**3013940**	•	•	•	•	•	•	CONNECTORS ASSEMBLY		B
21	**20207183**	•	•					MOTOR		C
21	**20201368**			•	•	•	•	MOTOR		C
22	**3006211**	•	•	•	•	•	•	FUSE		A
23	**20036017**	•	•	•	•	•	•	GREEN SIGNAL LIGHT		
24	**20121025**	•	•					FAN CONTACTOR		C
24	**20114743**			•	•	•	•	FAN CONTACTOR		C
25	**20027014**	•	•	•	•	•	•	WHITE SIGNAL LIGHT		
26	**3013681**	•	•	•	•	•	•	SCREW		
27	**3003891**	•	•	•	•	•	•	CONNECTOR		C
28	**3014079**	•	•	•	•	•	•	SPACER		
29	**20196590**	•	•					FAN THERMAL RELAY 575V		B
29	**20196586**			•	•	•	•	FAN THERMAL RELAY 460V		
29	**20196588**			•	•	•	•	FAN THERMAL RELAY 230V		
30	**3012959**	•	•	•	•	•	•	HIGH VOLTAGE LEAD		A
31	**20030011**	•	•	•	•	•	•	ELECTRODE		A
32	**20008601**	•	•	•	•	•	•	SERVOMOTOR		
33	**3013181**	•	•	•	•	•	•	TUBE		A
33	**3014130**	•	•	•	•	•	•	TUBE		A
34	**20049415**	•	•	•	•	•	•	SHUTTER		B
35	**20028947**	•	•	•	•	•	•	DISTRIBUTOR		
36	**20028336**	•	•	•	•	•	•	ELECTRODE		
37	**20028337**	•	•	•	•	•	•	TUBE		A
38	**20028338**	•	•	•	•	•	•	TUBE		A
39	**3012637**	•	•	•	•	•	•	ELBOW		
40	**20027422**	•	•	•	•	•	•	SELECTOR SWITCH		C
41	**3007891**	•	•	•	•	•	•	SEAL		B
42	**3013055**	•	•	•	•	•	•	TUBE		A
43	**3012969**	•	•	•	•	•	•	GAS PRESSURE SWITCH		
44	**3012956**	•	•	•	•	•	•	TRANSFORMER		
45	**3006096**	•	•	•	•	•	•	GAS REGULATOR		
46	**3012938**	•	•	•	•	•	•	TRANSFORMER		
47	**3012841**	•	•	•	•	•	•	BASE		
48	**20010969**	•	•	•	•	•	•	RELAY		
49	**3012948**	•	•	•	•	•	•	AIR PRESSURE SWITCH		
50	**3003643**	•	•	•	•	•	•	PLUG		
51	**20010962**	•	•	•	•	•	•	BUTTON		
52	**20028411**	•	•	•	•	•	•	SELECTOR SWITCH		
53	**3012049**	•	•	•	•	•	•	SCREW		
54	**3012639**	•	•	•	•	•	•	CONTROL DEVICE		
55	**3012640**	•	•	•	•	•	•	CYLINDER		
56	**3012641**	•	•	•	•	•	•	BRACKET		
57	**20186817**	•	•	•	•	•	•	FLAME SENSOR		
58	**3012643**	•	•	•	•	•	•	END CONE		

N.	CODE	20171526	20206041	20171527	20171662	20206039	20206040	DESCRIPTION	BURNER SERIAL NUMBER	*
59	**3020071**	•	•	•	•	•	•	BASE		
60	**3003322**	•	•	•	•	•	•	CONNECTOR		
61	**3013933**	•	•	•	•	•	•	INSPECTION WINDOW		
62	**3020068**	•	•	•	•	•	•	RELAY		
63	**3013938**	•	•	•	•	•	•	DISC		
64	**3013937**	•	•	•	•	•	•	HUB		C
65	**20028379**	•	•	•	•	•	•	GRADUATE SECTOR		
66	**3012642**	•	•	•	•	•	•	SHUTTER		
67	**3012647**	•	•	•	•	•	•	CENTERING SUPPORT		
68	**3013178**	•	•	•	•	•	•	SHUTTER		
69	**3007079**	•	•	•	•	•	•	SEAL		B
70	**3013188**	•	•	•	•	•	•	CONNECTOR		C
71	**3006722**	•	•	•	•	•	•	CONNECTOR		C
72	**3003006**	•	•	•	•	•	•	CONNECTOR		C
73	**20030708**	•	•	•	•	•	•	RELAY		B
74	**20028381**	•	•	•	•	•	•	TUBE		A
75	**20028382**	•	•	•	•	•	•	TUBE		A
76	**20028383**	•	•	•	•	•	•	TUBE		A
77	**20028384**	•	•	•	•	•	•	TUBE		A
78	**20028385**	•	•	•	•	•	•	CONNECTOR		C
79	**3003204**	•	•	•	•	•	•	SEAL		B
80	**3003294**	•	•	•	•	•	•	O-RING		B
81	**3003287**	•	•	•	•	•	•	COIL		
82	**20028386**	•	•	•	•	•	•	MODULATOR		
83	**3006723**	•	•	•	•	•	•	CONNECTOR		C
84	**3009081**	•	•	•	•	•	•	CONNECTOR		C
85	**3012126**	•	•	•	•	•	•	CONNECTOR		C
86	**3003200**	•	•	•	•	•	•	NUT		
87	**3014179**	•	•	•	•	•	•	CONNECTOR		C
88	**3013462**	•	•	•	•	•	•	CONNECTOR		C
89	**3012384**	•	•	•	•	•	•	OIL PRESSURE SWITCH		B
90	**3013674**	•	•	•	•	•	•	OIL PRESSURE SWITCH		B
91	**3006140**	•	•	•	•	•	•	PRESSURE GAUGE		A
93	**20028389**	•	•	•	•	•	•	TUBE		A
94	**20028390**	•	•	•	•	•	•	TUBE		A
95	**3006157**	•	•	•	•	•	•	PUMP		C
96	**3012949**	•	•	•	•	•	•	CONNECTOR		C
97	**3007164**	•	•	•	•	•	•	SEAL		B
98	**3006184**	•	•	•	•	•	•	BAR		
99	**20027570**	•	•	•	•	•	•	JOINT		
100	**20205008**	•	•	•	•	•	•	DRIVE COUPLING		A
101	**20062588**	•	•					MOTOR		C
101	**20031015**			•	•	•	•	MOTOR		C
102	**3012357**	•	•	•	•	•	•	BEARING		
103	**3013259**	•	•	•	•	•	•	BEARING		
104	**20028396**	•	•	•	•	•	•	LEVER		C
105	**3006098**	•	•	•	•	•	•	PIN JOINT		
106	**3013897**	•	•	•	•	•	•	TIE ROD		
107	**20028398**	•	•	•	•	•	•	SHAFT		
108	**20196211**	•	•	•	•	•	•	PUMP CONTACTOR		C
109	**20028400**	•	•	•	•	•	•	BASE		
110	**20031413**	•	•	•	•	•	•	HORN		
111	**20043329**	•	•	•	•	•	•	TIMER		

*

ADVISED PARTS

A = Spare parts for minimum fittings

A+B = Spare parts for basic safety fittings

A+B+C = Spare parts for extended safety fittings

B Appendix - Accessories

- **Gas train according to UL Standards**

The installer is responsible for the supply and installation of any required safety device(s) not indicated in this manual.

C Appendix - Burner start up report

Model number:	_____	Serial number:	_____
Project name:	_____	Start-up date:	_____
Installing contractor:	_____	Phone number:	_____

GAS OPERATION

Gas Supply Pressure:	_____	CO_2: Low Fire	_____	High Fire	_____
Main Power Supply:	_____	O_2: Low Fire	_____	High Fire	_____
Control Power Supply:	_____	CO: Low Fire	_____	High Fire	_____
Burner Firing Rate:	_____	NO_X: Low Fire	_____	High Fire	_____
Manifold Pressure:	_____	Net Stack Temp - Low Fire:	_____	High Fire	_____
Pilot Flame Signal:	_____	Comb. Efficiency - Low Fire:	_____	High Fire	_____
Low Fire Flame Signal:	_____	Overfire Draft:	_____		
High Fire Flame Signal:	_____				

OIL OPERATION

Oil supply pressure:	_____	CO_2: Low Fire	_____	High Fire	_____
Oil suction pressure:	_____	O_2: Low Fire	_____	High Fire	_____
Control Power Supply:	_____	CO: Low Fire	_____	High Fire	_____
Burner Firing Rate:	_____	NO_X: Low Fire	_____	High Fire	_____
Low Fire Flame Signal:	_____	Net Stack Temp - Low Fire:	_____	High Fire	_____
High Fire Flame Signal:	_____	Comb. Efficiency - Low Fire:	_____	High Fire	_____
Low Fire Nozzle Size:	_____	Overfire Draft:	_____		
High Fire Nozzle Size:	_____	Smoke number:	_____		

CONTROL SETTINGS

Operating Setpoint:	_____	Low Oil Pressure:	_____
High Limit Setpoint:	_____	High Oil Pressure:	_____
Low Gas Pressure:	_____	Flame Safeguard Model Number:	_____
High Gas Pressure:	_____	Modulating Signal Type:	_____

NOTES

_____

_____

_____

_____

RIELLO S.p.A.
I-37045 Legnago (VR)
Tel.: +39.0442.630111
http:// www.riello.com

RIELLO BURNERS NORTH AMERICA
http://www.riello.ca

35 Pond Park Road
Hingham, Massachusetts,
U.S.A. 02043

1-800-4-RIELLO

2165 Meadowpine Blvd
Mississauga, Ontario
Canada L5N 6H6

Subject to modifications