Riello Gateway

CODE	
20141213, 20141214	LMV3, LMV5, Array, Massimo, Picollo

TABLE OF CONTENTS

1 BURNER(S)/BOILER(S) SETUP

1.1 PRODUCT USAGE 3

1.2 FIELD DEVICE CONNECTIONS 4

1.3 SETTING UP FIELD CONTROLLER(S) 5
1.3.1 SETTING UP THE ARRAY BOILER CONTROLLER(S) 5
1.3.2 SETTING UP THE LMV3 AND RWF CONTROLLER(S) 5
1.3.3 SETTING UP THE LMV5 CONTROLLER(S) 5

2 GATEWAY SETUP AND ELECTRICAL CONNECTIONS

2.1 GATEWAY BREAKDOWN 6-7

2.2 DIP SWITCHES 7
2.2.1 A DIP SWITCHES-BAS SIDE MAC ADDRESS (ONLY FOR BACNET MSTP) 8-9
2.2.2 B DIP SWITCHES-PROFILE SELECTION 10
2.2.3 S DIP SWITCHES-NUMBER OF BURNER(S)/BOILER(S) 10

2.3 SETTING UP YOUR DESKTOP
2.3.1 DISCOVERING DEVICE 11
2.3.2 SETTING UP LAPTOP TO CONNECT TO GATEWAY 12

2.5 CHANGING THE GATEWAY IP 13

3 TROUBLESHOOTING

3.1 GATEWAY LIGHTS 14

3.2 ACCESSING THE GATEWAY TO TROUBLESHOOT 15

4 OBJECT TABLES

4.1 LMV3 BURNER(S) TABLE 16

4.2 LMV5 BURNER(S) TABLE 17

4.3 ARRAY BOILER(S) TABLE 18-20
4.3.1 ARRAY STATE/ERROR TABLE 21-22

1 BURNER(S)/BOILER(S) SETUP

1.1 PRODUCT USAGE

CASE 1 (Array Boiler): The gateway can connect with up to 8 Array boilers…This is 1 boiler

MODULES– There are 8 modules within this one boiler

Note: Number of modules depends on the boiler model. Ex. Array 1000 has 2 modules, Array 3000 has 6 modules, etc.

CASE 2 or 3 (Either LMV3 or LMV5): Within the R Series burner(s), identify the LMV controller by removing the burner cover. The gateway can connect with up to 6 burners.

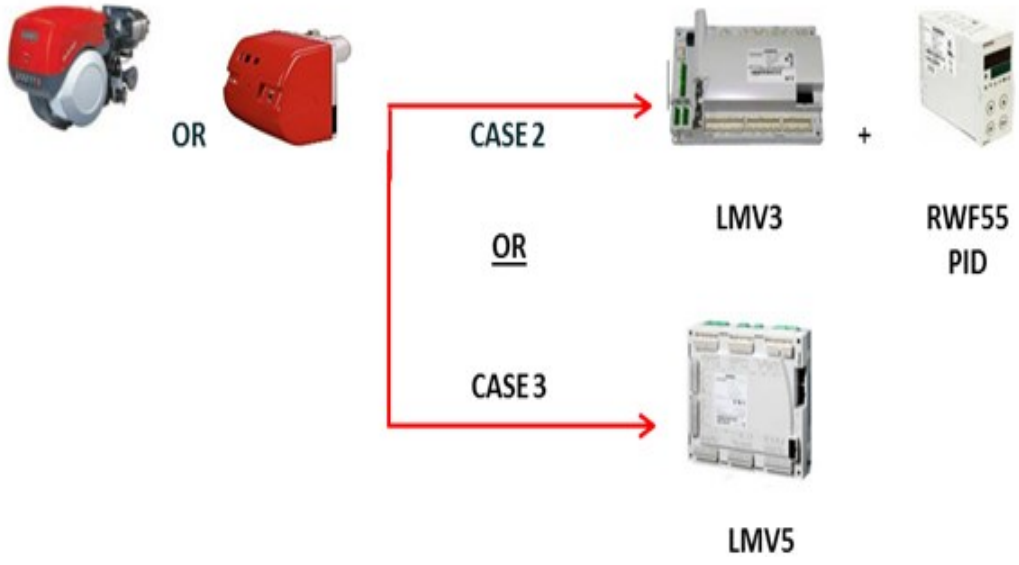

1.2 FIELD DEVICE CONNECTIONS

The gateway can connect with up to 8 Array boilers.

Array 1.0 integration

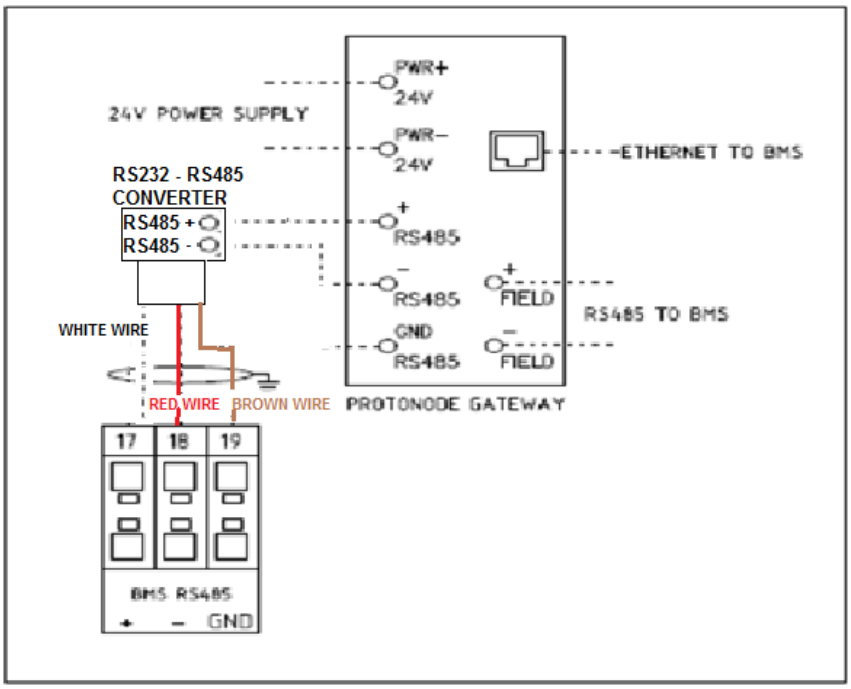

*** RS232 Converter with Array 1.0 is 20147499 (1 per boiler)

*** RS232-RS485 Device on Array V1.0 is powered through the RS232 bus.

*** AL Bus for cascade control is on a separate daisy chain. Please see Array Control System manual

Array 2.0 integration

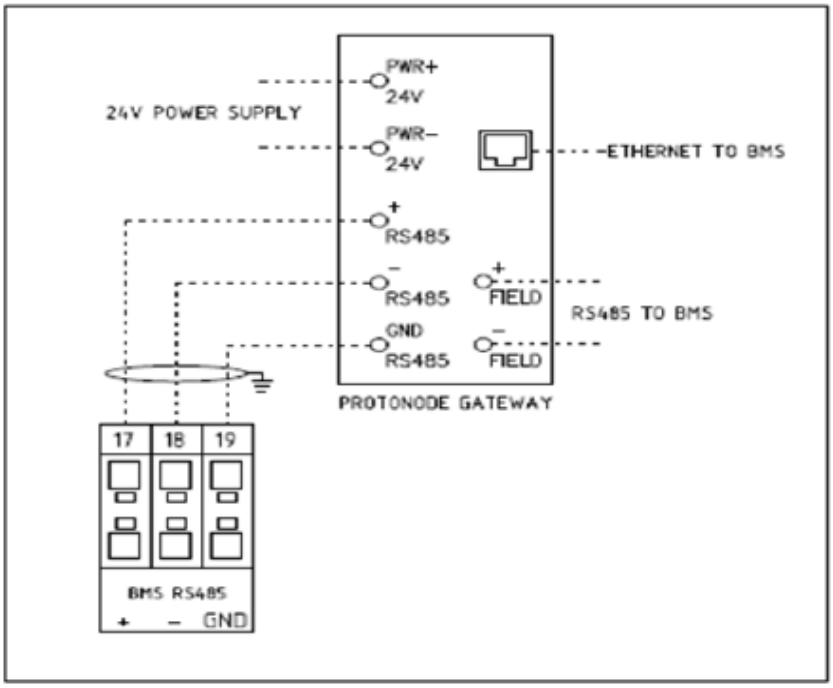

*** AL Bus for cascade control is on a separate daisy chain. Please see Array Control System manual

*** Please see job specific Riello burner drawings for linkageless LMV3, LMV5 burners

1.3 SETTING UP FIELD CONTROLLERS

1.3.1 CASE 1: SETTING UP THE ARRAY BOILER CONTROLLER(S)

***** Important** : There is nothing the BAS technician needs to change with respect to the Modbus side of the boilers. Modbus addressing is automatically set up through the cascade

1.3.2 CASE 2: SETTING UP THE LMV3 AND RWF55 CONTROLLER(S)

> 141 - 1

> 145 - Set burner address from 1-6 (each burner must have its own unique address)

>146 - 1

>147 - 0

Conf > Intf > set the following parameters:

> Bdrt - 2

> Adr - Set RWF55 address from 11-16 (each RWF55 much have its own unique Address)

1.3.3 CASE 3: SETTING UP THE LMV5 CONTROLLER(S)

Operation > OPTG Mode Select > Modbus

Params & Display > User level > AZL > Set the following parameters:

> Parity: 0

> Baudrate: 19200

> Address: Set the burner address from 1-6 (each burner address must be unique)

2 GATEWAY SETUP AND ELECTRICAL CONNECTIONS

2.1 GATEWAY BREAKDOWN

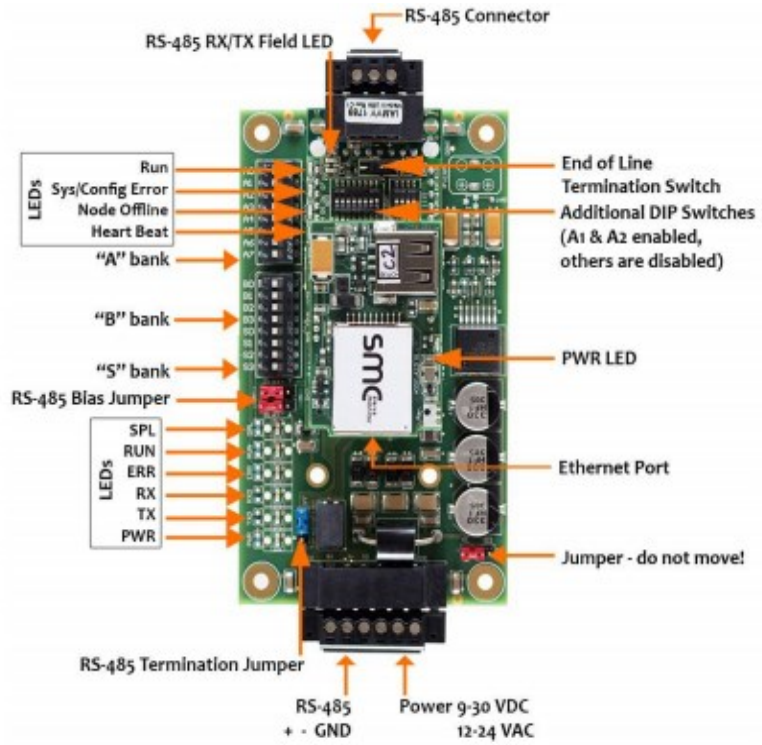

6 pin Connector - RS-485 and Power Connection

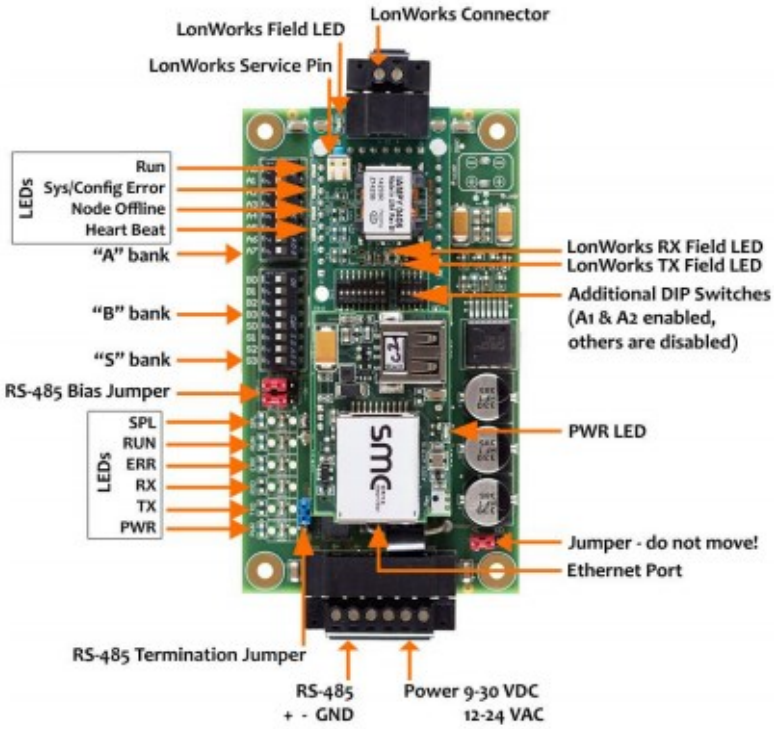

6 pin Connector - RS-485 and Power Connection

2.2 DIP SWITCES

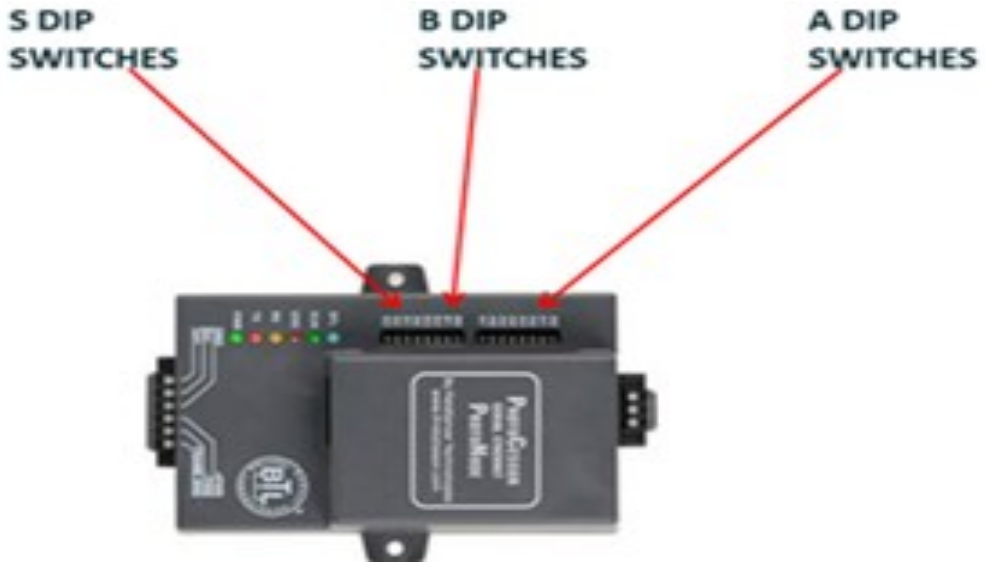

2.2.1 A DIP SWITCHES - BAS SIDE MAC ADDRESS (ONLY FOR BACNET MS/TP)

A Dipswitches - Set MAC Address for BAS

Node Address	A0	A1	A2	A3	A4	A5	A6	A7
0	OFF	OFF	OFF	OFF	OFF	OFF	OFF	OFF
1	ON	OFF	OFF	OFF	OFF	OFF	OFF	OFF
2	OFF	ON	OFF	OFF	OFF	OFF	OFF	OFF
3	ON	ON	OFF	OFF	OFF	OFF	OFF	OFF
4	OFF	OFF	ON	OFF	OFF	OFF	OFF	OFF
5	ON	OFF	ON	OFF	OFF	OFF	OFF	OFF
6	OFF	ON	ON	OFF	OFF	OFF	OFF	OFF
7	ON	ON	ON	OFF	OFF	OFF	OFF	OFF
8	OFF	OFF	OFF	ON	OFF	OFF	OFF	OFF
9	ON	OFF	OFF	ON	OFF	OFF	OFF	OFF
10	OFF	ON	OFF	ON	OFF	OFF	OFF	OFF
11	ON	ON	OFF	ON	OFF	OFF	OFF	OFF
12	OFF	OFF	ON	ON	OFF	OFF	OFF	OFF
13	ON	OFF	ON	ON	OFF	OFF	OFF	OFF
14	OFF	ON	ON	ON	OFF	OFF	OFF	OFF
15	ON	ON	ON	ON	OFF	OFF	OFF	OFF
16	OFF	OFF	OFF	OFF	ON	OFF	OFF	OFF
17	ON	OFF	OFF	OFF	ON	OFF	OFF	OFF
18	OFF	ON	OFF	OFF	ON	OFF	OFF	OFF
19	ON	ON	OFF	OFF	ON	OFF	OFF	OFF
20	OFF	OFF	ON	OFF	ON	OFF	OFF	OFF
21	ON	OFF	ON	OFF	ON	OFF	OFF	OFF
22	OFF	ON	ON	OFF	ON	OFF	OFF	OFF
23	ON	ON	ON	OFF	ON	OFF	OFF	OFF
24	OFF	OFF	OFF	ON	ON	OFF	OFF	OFF
25	ON	OFF	OFF	ON	ON	OFF	OFF	OFF
26	OFF	ON	OFF	ON	ON	OFF	OFF	OFF
27	ON	ON	OFF	ON	ON	OFF	OFF	OFF
28	OFF	OFF	ON	ON	ON	OFF	OFF	OFF
29	ON	OFF	ON	ON	ON	OFF	OFF	OFF
30	OFF	ON	ON	ON	ON	OFF	OFF	OFF
31	ON	ON	ON	ON	ON	OFF	OFF	OFF
32	OFF	OFF	OFF	OFF	OFF	ON	OFF	OFF
33	ON	OFF	OFF	OFF	OFF	ON	OFF	OFF
34	OFF	ON	OFF	OFF	OFF	ON	OFF	OFF
35	ON	ON	OFF	OFF	OFF	ON	OFF	OFF
36	OFF	OFF	ON	OFF	OFF	ON	OFF	OFF
37	ON	OFF	ON	OFF	OFF	ON	OFF	OFF
38	OFF	ON	ON	OFF	OFF	ON	OFF	OFF
39	ON	ON	ON	OFF	OFF	ON	OFF	OFF
40	OFF	OFF	OFF	ON	OFF	ON	OFF	OFF
41	ON	OFF	OFF	ON	OFF	ON	OFF	OFF
42	OFF	ON	OFF	ON	OFF	ON	OFF	OFF
43	ON	ON	OFF	ON	OFF	ON	OFF	OFF
44	OFF	OFF	ON	ON	OFF	ON	OFF	OFF
45	ON	OFF	ON	ON	OFF	ON	OFF	OFF
46	OFF	ON	ON	ON	OFF	ON	OFF	OFF
47	ON	ON	ON	ON	OFF	ON	OFF	OFF
48	OFF	OFF	OFF	OFF	ON	ON	OFF	OFF
49	ON	OFF	OFF	OFF	ON	ON	OFF	OFF
50	OFF	ON	OFF	OFF	ON	ON	OFF	OFF
51	ON	ON	OFF	OFF	ON	ON	OFF	OFF
52	OFF	OFF	ON	OFF	ON	ON	OFF	OFF
53	ON	OFF	ON	OFF	ON	ON	OFF	OFF
54	OFF	ON	ON	OFF	ON	ON	OFF	OFF
55	ON	ON	ON	OFF	ON	ON	OFF	OFF
56	OFF	OFF	OFF	ON	ON	ON	OFF	OFF
57	ON	OFF	OFF	ON	ON	ON	OFF	OFF
58	OFF	ON	OFF	ON	ON	ON	OFF	OFF
59	ON	ON	OFF	ON	ON	ON	OFF	OFF
60	OFF	OFF	ON	ON	ON	ON	OFF	OFF
61	ON	OFF	ON	ON	ON	ON	OFF	OFF
62	OFF	ON	ON	ON	ON	ON	OFF	OFF
63	ON	ON	ON	ON	ON	ON	OFF	OFF

2.2.1 A DIP SWITCHES - BAS SIDE MAC ADDRESS (ONLY FOR BACNET MS/TP)

A Dipswitches - Set MAC Address for BAS

Node Address	A0	A1	A2	A3	A4	A5	A6	A7
64	OFF	OFF	OFF	OFF	OFF	OFF	ON	OFF
65	ON	OFF	OFF	OFF	OFF	OFF	ON	OFF
66	OFF	ON	OFF	OFF	OFF	OFF	ON	OFF
67	ON	ON	OFF	OFF	OFF	OFF	ON	OFF
68	OFF	OFF	ON	OFF	OFF	OFF	ON	OFF
69	ON	OFF	ON	OFF	OFF	OFF	ON	OFF
70	OFF	ON	ON	OFF	OFF	OFF	ON	OFF
71	ON	ON	ON	OFF	OFF	OFF	ON	OFF
72	OFF	OFF	OFF	ON	OFF	OFF	ON	OFF
73	ON	OFF	OFF	ON	OFF	OFF	ON	OFF
74	OFF	ON	OFF	ON	OFF	OFF	ON	OFF
75	ON	ON	OFF	ON	OFF	OFF	ON	OFF
76	OFF	OFF	ON	ON	OFF	OFF	ON	OFF
77	ON	OFF	ON	ON	OFF	OFF	ON	OFF
78	OFF	ON	ON	ON	OFF	OFF	ON	OFF
79	ON	ON	ON	ON	OFF	OFF	ON	OFF
80	OFF	OFF	OFF	OFF	ON	OFF	ON	OFF
81	ON	OFF	OFF	OFF	ON	OFF	ON	OFF
82	OFF	ON	OFF	OFF	ON	OFF	ON	OFF
83	ON	ON	OFF	OFF	ON	OFF	ON	OFF
84	OFF	OFF	ON	OFF	ON	OFF	ON	OFF
85	ON	OFF	ON	OFF	ON	OFF	ON	OFF
86	OFF	ON	ON	OFF	ON	OFF	ON	OFF
87	ON	ON	ON	OFF	ON	OFF	ON	OFF
88	OFF	OFF	OFF	ON	ON	OFF	ON	OFF
89	ON	OFF	OFF	ON	ON	OFF	ON	OFF
90	OFF	ON	OFF	ON	ON	OFF	ON	OFF
91	ON	ON	OFF	ON	ON	OFF	ON	OFF
92	OFF	OFF	ON	ON	ON	OFF	ON	OFF
93	ON	OFF	ON	ON	ON	OFF	ON	OFF
94	OFF	ON	ON	ON	ON	OFF	ON	OFF
95	ON	ON	ON	ON	ON	OFF	ON	OFF
96	OFF	OFF	OFF	OFF	OFF	ON	ON	OFF
97	ON	OFF	OFF	OFF	OFF	ON	ON	OFF
98	OFF	ON	OFF	OFF	OFF	ON	ON	OFF
99	ON	ON	OFF	OFF	OFF	ON	ON	OFF
100	OFF	OFF	ON	OFF	OFF	ON	ON	OFF
101	ON	OFF	ON	OFF	OFF	ON	ON	OFF
102	OFF	ON	ON	OFF	OFF	ON	ON	OFF
103	ON	ON	ON	OFF	OFF	ON	ON	OFF
104	OFF	OFF	OFF	ON	OFF	ON	ON	OFF
105	ON	OFF	OFF	ON	OFF	ON	ON	OFF
106	OFF	ON	OFF	ON	OFF	ON	ON	OFF
107	ON	ON	OFF	ON	OFF	ON	ON	OFF
108	OFF	OFF	ON	ON	OFF	ON	ON	OFF
109	ON	OFF	ON	ON	OFF	ON	ON	OFF
110	OFF	ON	ON	ON	OFF	ON	ON	OFF
111	ON	ON	ON	ON	OFF	ON	ON	OFF
112	OFF	OFF	OFF	OFF	ON	ON	ON	OFF
113	ON	OFF	OFF	OFF	ON	ON	ON	OFF
114	OFF	ON	OFF	OFF	ON	ON	ON	OFF
115	ON	ON	OFF	OFF	ON	ON	ON	OFF
116	OFF	OFF	ON	OFF	ON	ON	ON	OFF
117	ON	OFF	ON	OFF	ON	ON	ON	OFF
118	OFF	ON	ON	OFF	ON	ON	ON	OFF
119	ON	ON	ON	OFF	ON	ON	ON	OFF
120	OFF	OFF	OFF	ON	ON	ON	ON	OFF
121	ON	OFF	OFF	ON	ON	ON	ON	OFF
122	OFF	ON	OFF	ON	ON	ON	ON	OFF
123	ON	ON	OFF	ON	ON	ON	ON	OFF
124	OFF	OFF	ON	ON	ON	ON	ON	OFF
125	ON	OFF	ON	ON	ON	ON	ON	OFF
126	OFF	ON	ON	ON	ON	ON	ON	OFF
127	ON	ON	ON	ON	ON	ON	ON	OFF

2.3.2 B DIP SWITCHES—PROFILE SELCTION

For example: On page 3, case 2 is chosen. This means you have an LMV3 on the burner and the BAS network is decided to communicate through BACnet MS/TP. You would choose the 10th profile, using dip switches B0-"ON", B1-"OFF", B2-"OFF", B3-"ON".

B Dipswitches - SELECT PROFILE					
	Profile	B0	B1	B2	B3
1	MODBUS TCP/LONWORKS_LMV3	OFF	OFF	OFF	OFF
2	MODBUS TCP/LONWORKS_LMV5	ON	OFF	OFF	OFF
3	MODBUS TCP/LONWORKS_ARRAY	OFF	ON	OFF	OFF
4	BACNETIP_LMV3	ON	ON	OFF	OFF
5	BACNETIP_LMV5	OFF	OFF	ON	OFF
6	BACNETIP_ARRAY	ON	OFF	ON	OFF
7	ETHERNETIP_LMV3	OFF	ON	ON	OFF
8	ETHERNETIP_LMV5	ON	ON	ON	OFF
9	ETHERNETIP_ARRAY	OFF	OFF	OFF	ON
10	BACNETMSTP_LMV3	ON	OFF	OFF	ON
11	BACNETMSTP_LMV5	OFF	ON	OFF	ON
12	BACNETMSTP_ARRAY	ON	ON	OFF	ON
13	METASYSN2_LMV3	OFF	OFF	ON	ON
14	METASYSN2_LMV5	ON	OFF	ON	ON
15	METASYSN2_ARRAY	OFF	ON	ON	ON

2.3.3 S DIP SWITCHES– NUMBER OF BOILER(S)/BURNER(S)

S Dipswitches - Number of burners/boilers				
Profile	S0	S1	S2	S3
1 BURNER/BOILER	OFF	OFF	OFF	ON
2 BURNERS/BOILERS	ON	OFF	OFF	ON
3 BURNERS/BOILERS	OFF	ON	OFF	ON
4 BURNERS/BOILERS	ON	ON	OFF	ON
5 BURNERS/BOILERS	OFF	OFF	ON	ON
6 BURNERS/BOILERS	ON	OFF	ON	ON
7 BOILERS	OFF	ON	ON	ON
8 BOILERS	ON	ON	ON	ON

2.4 SETTING UP YOUR DESKTOP

2.4.1 DISCOVERING A DEVICE

1. Please download fieldserver toolbox from the following link:
https://www.sierramonitor.com/content/fieldserver-toolbox-0

2. Open toolbox application, at this point the toolbox will discover the gateway connected to your laptop

2.4.2 SETTING UP YOUR LAPTOP TO CONNECT TO THE GATEWAY

Assuming the gateway has the following default IP address: 192.168.1.24 and Subnet Mask: 255.255.255.0…..

Step 1: Right click on the Local Area Network Connection and go into "properties"

Step 2: Select "properties"

Step 3: **Right click on "Internet Protocol Version 4(TCP/IP/IPV4)"**

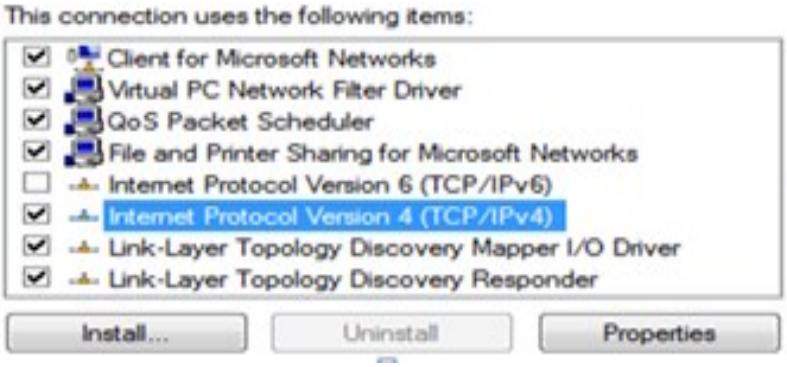

Step 4: **Change IP and Subnet Mask to match the network of the gateway.**

2.5 CHANGING THE GATEWAY IP

Step 1: Open up your internet browser, enter IP address of gateway, and click on "Diagnostics & Debugging" at the bottom right hand side of the page.

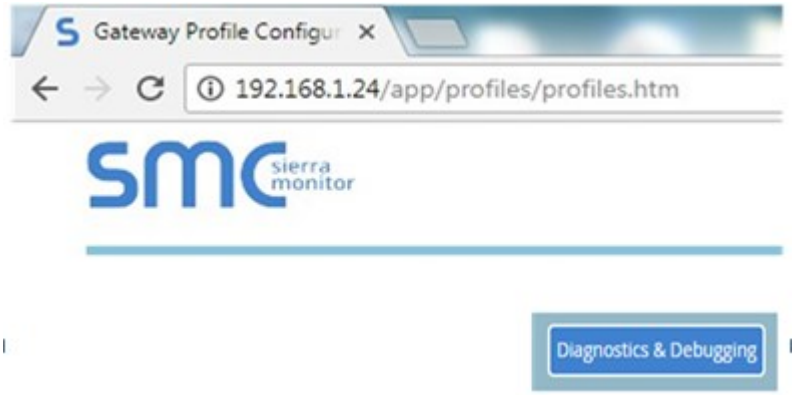

Step 2: On the Nav tree, click "Setup", then "Network Settings"

2.5 CHANGING THE GATEWAY IP

Step 1: Open up your internet browser, enter IP address of gateway, and click on “Diagnostics & Debugging” at the bottom right hand side of the page.

Step 2: On the Nav tree, click “Setup”, then “Network Settings”

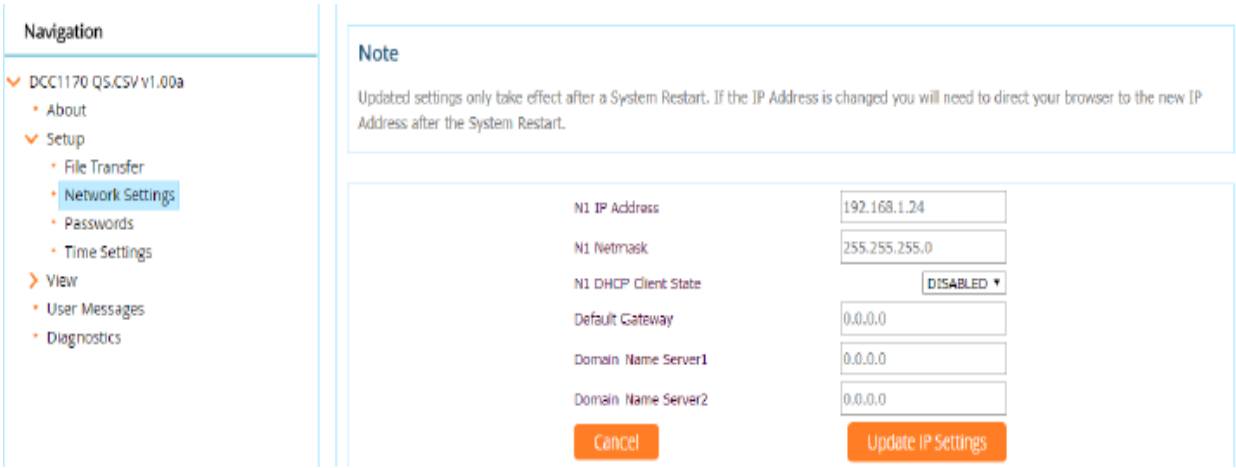

3 TROUBLESHOOTING

3.1 GATEWAY LIGHTS

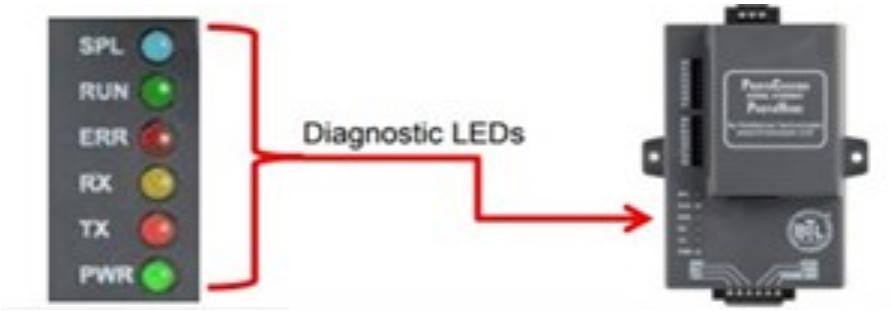

SPL - Will light if the gateway is offline.

RUN - Will start flashing 20 seconds after power indicating normal operation.

ERR - Will go solid 15 seconds after power up. It will turn off after 5 seconds. A steady red light indicates that there is an error.

RX - Will flash when a message is received on the host port.

TX - Will flash when a message is sent from the host port.

PWR - This is the power light and should show a steady green at all times when the gateway is powered

*** RX and TX lights should be flashing indicating that there is communication between the gateway and burner(s)/boiler(s)

3.2 ACCESSING GATEWAY TO TROUBLESHOOT

Troubleshooting steps after setup, if red light is flashing or gateway is not communicating:

Is ERR light flashing?

If ERR light is NOT flashing then:

1. Connect to the gateway from your internet browser by entering the gateway IP address (see section 2.4). Verify that the gateway is reading data from the burner(s).

Example: if burner 1 is connected and data is showing in the bottom right matrix as shown below, then the gateway is communicating to the first burner/boiler. If all data is reading ‘0’, then the gateway is not communicating with the burner/boiler.

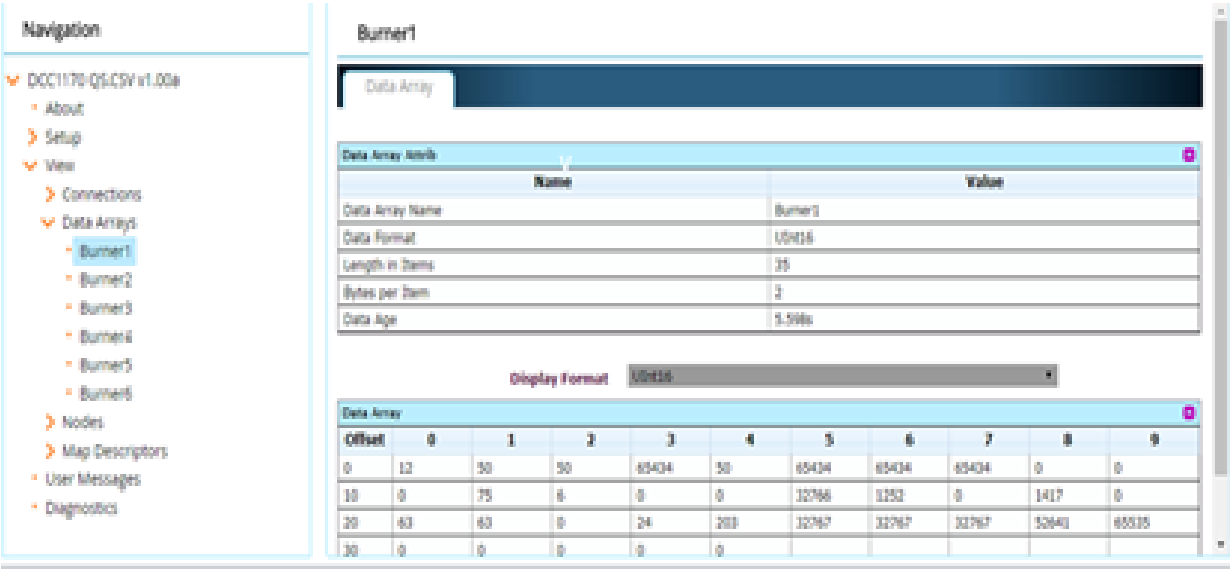

If ERR light is flashing then:

1. Verify wiring is correct between gateway and burner(s)/boiler(s).

2. Verify correct address, baud rate, and parity on field devices (See section 1.3).

4 OBJECT TABLES

4.1 LMV3 BURNER(S) TABLE

BACnet MS/TP - Default: Baud Rate - 38400 (adjustable through internet GUI) , Parity - none, Data Bits - 8, Stop Bits - 1, Node ID - 1547 (adjustable through internet GUI) , Max Master - 127, and MAC address is set through dip switches A.

BACnet IP - Default: IP - 192.168.1.24, Subnet Mask - 255.255.255.0, Node ID - 1547

Modbus TCP - Default: - 192.168.1.24, Subnet Mask - 255.255.255.0, Node ID - 154

Ethernet IP - Default: - 192.168.1.24, Subnet Mask - 255.255.255.0, Node ID - 154

Metasys N2 - Default - Baud Rate - 9600 (non adjustable), Node ID - 154 (adjustable through internet GUI)

LMV3 BACnet MS/TP, BACnet IP, Modbus TCP, Lonworks, and Metasys N2, Ethernet IP											
B1 add	B2 add	B3 add	B4 add	B5 add	B6 add	Point Name	LON fun. , SVNT Opt+type	EIP Att. , Class	Modbus TCP Data type	Data Type	Unit/ SNVT_Type
1	25	50	75	100	125	B(X)_Phase	NVUI, -, -	3,4	Holding Reg.	AI	No Unit
2	26	51	76	101	126	B(X)_VFD Output	NVUI, Value, SNVT_switch	3,4	Holding Reg.	AI	%
3	27	52	77	102	127	B(X)_Fuel Type	NVUI, -, -	3,4	Holding Reg.	AI	No Unit
4	28	53	78	103	128	B(X)_Firing Rate	NVUI, Value, SNVT_switch	3,4	Holding Reg.	AI	%
5	29	54	79	104	129	B(X)_Flame Signal	NVUI, -, -	3,4	Holding Reg.	AI	No Unit
6	30	55	80	105	130	B(X)_Fuel Flow	NVUI, -, -	3,4	Holding Reg.	AI	No Unit
7	31	56	81	106	131	B(X)_Start Count	NVUI, Value, SNVT_switch	3,4	Holding Reg.	AI	%
8	32	57	82	107	132	B(X)_Error Code	NVUI, -, -	3,4	Holding Reg.	AI	No Unit
9	33	58	83	108	133	B(X)_Diag code	NVUI, Value, SNVT_switch	3,4	Holding Reg.	AI	%
						Inputs					
1/301*	10/310*	20/320*	30/330*	40/340*	50/350*	B(X)_Safety Loop	NVUI, State, SNVT_switch	3,4	Discrete_Input	BI	No Unit
2/302*	11/311	21/321*	31/331*	41/341*	51/351*	B(X)_Gas Switches	NVUI, State, SNVT_switch	3,4	Discrete_Input	BI	No Unit
						Outputs					
3/303*	12/312*	22/322*	32/332*	42/342*	52/352*	B(X)_Alarm	NVUI, State, SNVT_switch	3,4	Discrete_Input	BO	No Unit
4/304*	13/313*	23/323*	33/333*	43/343*	53/353*	B(X)_Fan	NVUI, State, SNVT_switch	3,4	Discrete_Input	BO	No Unit
10	34	59	84	109	134	B(X)_Loc_Rem	NVUI, -, -	3,4	Holding Reg.	AV	No Unit
11	35	60	85	110	135	B(X)_RemOnOffAuto	NVUI, -, -	3,4	Holding Reg.	AV	No Unit
12	36	61	86	111	136	B(X)_Firing Rate	NVUI, Value, SNVT_switch	3,4	Holding Reg.	AV	%
13	37	62	87	112	137	RWF(X)_Process Value	NVUI, -, -	3,4	Holding Reg.	AI	No Unit
14	38	63	88	113	138	RWF(X)_Setpoint	NVUI, -, -	3,4	Holding Reg.	AI	No Unit
15	39	64	89	114	139	RWF(X)_PID Loc/Rem	NVUI, -, -	3,4	Holding Reg.	AV	No Unit
16	40	65	90	115	140	RWF(X)_Setpoint	NVUI, -, -	3,4	Holding Reg.	AV	No Unit

4.2 LMV5 BURNER(S) TABLE

BACnet MS/TP - Default: Baud Rate - 38400 (adjustable through internet GUI) , Parity - none, Data Bits - 8, Stop Bits - 1, Node ID - 1547 (adjustable through internet GUI) , Max Master - 127, and MAC address is set through dip switches A.

BACnet IP - Default: IP - 192.168.1.24, Subnet Mask - 255.255.255.0, Node ID - 1547

Modbus TCP - Default: - 192.168.1.24, Subnet Mask - 255.255.255.0, Node ID - 154

Ethernet IP - Default: - 192.168.1.24, Subnet Mask - 255.255.255.0, Node ID - 154

Metasys N2 - Default - Baud Rate - 9600 (non adjustable), Node ID - 154 (adjustable through

LMV5 BACnet MS/TP, BACnet IP, Modbus TCP, Lonworks, and Metasys N2, Ethernet IP

B1 add	B2 add	B3 add	B4 add	B5 add	B6 add	Point Name	LON fun. , SVNT Opt+type	EIP Att. , Class	Modbus TCP Data type	Data Type	Unit/ SNVT_Type
1	25	50	75	100	125	B(X)_Phase	NVUI, -, -	3,4	Holding Reg.	AI	No Unit
2	26	51	76	101	126	B(X)_VFD Output	NVUI, Value, SVNT_lev_percent	3,4	Holding Reg.	AI	%
3	27	52	77	102	127	B(X)_Fuel Type	NVUI, -, -	3,4	Holding Reg.	AI	No Unit
4	28	53	78	103	128	B(X)_Firing Rate	NVUI, Value, SNVT_switch	3,4	Holding Reg.	AI	%
5	29	54	79	104	129	B(X)_Setpoint	NVUI, -, -	3,4	Holding Reg.	AI	No Unit
6	30	55	80	105	130	B(X)_Process Value	NVUI, -, -	3,4	Holding Reg.	AI	No Unit
7	31	56	81	106	131	B(X)_Flame Signal	NVUI, Value, SNVT_switch	3,4	Holding Reg.	AI	%
8	32	57	82	107	132	B(X)_Fuel Flow	NVUI, -, -	3,4	Holding Reg.	AI	No Unit
9	33	58	83	108	133	B(X)_O2 Value	NVUI, Value, SNVT_switch	3,4	Holding Reg.	AI	%
10	34	59	84	109	134	B(X)_Start Count	NVUI, -, -	3,4	Holding Reg.	AI	No Unit
11	35	60	85	110	135	B(X)_Hours	NVUI, -, -	3,4	Holding Reg.	AI	Hours
12	36	61	86	111	136	B(X)_Error Code	NVUI, -, -	3,4	Holding Reg.	AI	No Unit
13	37	62	87	112	137	B(X)_Diag Code	NVUI, -, -	3,4	Holding Reg.	AI	No Unit
14	38	63	88	113	138	B(X)_Supp Air Temp	NVUI, -, -	3,4	Holding Reg.	AI	No Unit
15	39	64	89	114	139	B(X)_Flue Gas Temp	NVUI, -, -	3,4	Holding Reg.	AI	No Unit
16	40	65	90	115	140	B(X)_Comb Eff	NVUI, Value, SNVT_switch	3,4	Holding Reg.	AI	%
						Inputs				AI	No Unit
1/301*	10/310*	20/320*	30/330*	40/340*	50/350*	B(X)_Safety Loop	NVUI, State, SNVT_switch	3,4	Discrete_Input	BI	
2/302*	11/311	21/321*	31/331*	41/341*	51/351*	B(X)_Gas Switches	NVUI, State, SNVT_switch	3,4	Discrete_Input	BI	
						Outputs				AI	No Unit
3/303*	12/312*	22/322*	32/332*	42/342*	52/352*	B(X)_Alarm	NVUI, State, SNVT_switch	3,4	Discrete_Input	BO	
4/304*	13/313*	23/323*	33/333*	43/343*	53/353*	B(X)_Fan	NVUI, State, SNVT_switch	3,4	Discrete_Input	BO	
17	41	66	91	116	141	B(X)_Loc_Rem	NVUI, -, -	3,4	Holding Reg.	AV	No Unit
18	42	67	92	117	142	B(X)_RemOnOffAuto	NVUI, -, -	3,4	Holding Reg.	AV	No Unit
19	43	68	93	118	143	B(X)_Setpoint	NVUI, -, -	3,4	Holding Reg.	AV	No Unit
20	44	69	94	119	144	B(X)_Firing Rate	NVUI, Value, SNVT_switch	3,4	Holding Reg.	AV	%

4.3 ARRAY BOILER(S) TABLE

BACnet MS/TP - Default: Baud Rate (adjustable through internet GUI) - 38400, Parity - none, Data Bits - 8, Stop Bits - 1, Node ID - 1547(adjustable through internet GUI) , Max Master - 127, and MAC address is set through dip switches A.

BACnet IP - Default: IP - 192.168.1.24, Subnet Mask - 255.255.255.0, Node ID - 1547

Modbus TCP - Default: - 192.168.1.24, Subnet Mask - 255.255.255.0, Node ID - 154

Ethernet IP - Default: - 192.168.1.24, Subnet Mask - 255.255.255.0, Node ID - 154

Metasys N2 - Default - Baud Rate - 9600 (non adjustable), Node ID - 154 (adjustable through internet GUI)

Array BACnet MS/TP, BACnet IP, Modbus TCP, LONworks, and Metasys N2, Ethernet IP

B1	B2	B3	B4	B5	B6	B7	B8	Point Name	LON fun. , SVNT Opt+type	EIP Att. , Class	Modbus TCP Data type	R/W	Unit
11	N/A	N/A	N/A	N/A	N/A	N/A	N/A	System SP	NVUI, -, -	3,4	Holding Reg.	AV	Deg F
1	N/A	N/A	N/A	N/A	N/A	N/A	N/A	System OAT	NVUI, -, -	3,4	Holding Reg.	AI	Deg F
2	N/A	N/A	N/A	N/A	N/A	N/A	N/A	System Firing Rate	NVUI, Value, SNVT_switch	3,4	Holding Reg.	AI	%
3	N/A	N/A	N/A	N/A	N/A	N/A	N/A	System SP	NVUI, -, -	3,4	Holding Reg.	AI	Deg F
4	N/A	N/A	N/A	N/A	N/A	N/A	N/A	System Temp	NVUI, -, -	3,4	Holding Reg.	AI	Deg F
1/*1001	N/A	N/A	N/A	N/A	N/A	N/A	N/A	System Pump Status	NVUI, -, -	3,4	Holding Reg.	AI	No Unit
											Holding Reg.		
5/*1005	10/*1010	15/*1015	20/*1020	25/*1405	30/*1030	35/*1035	40/*1040	Boiler(x)_Running	NVUI, -, -	3,4	Holding Reg.	AI	No Unit
6/*1006	11/*1012	16/*1016	21/*1021	26/*1406	31/*1031	36/*1036	41/*1041	Boiler(x)_Error	NVUI, -, -	3,4	Holding Reg.	AI	No Unit
7	107	207	307	407	507	607	707	Boiler(x)_Firing Rate	NVUI, Value, SNVT_switch	3,4	Holding Reg.	AI	%
8	108	208	308	408	508	608	708	Boiler(x)_SP	NVUI, -, -	3,4	Holding Reg.	AI	Deg F
9	109	209	309	409	509	609	709	Boiler(x)_Supply Temp.	NVUI, -, -	3,4	Holding Reg.	AI	Deg F
10	110	210	310	410	510	610	710	Boiler(x)_Hours		3,4	Holding Reg.	AI	Hours
14	114	214	314	414	514	614	714	Boiler(x)Mod1_State	NVUI, -, -	3,4	Holding Reg.	AI	No Unit
15	115	215	315	415	515	615	715	Boiler(x) Mod1_Error Code	NVUI, -, -	3,4	Holding Reg.	AI	No Unit
16	116	216	316	416	516	616	716	Boiler(x) Mod1_SP	NVUI, -, -	3,4	Holding Reg.	AI	Deg F
17	117	217	317	417	517	617	717	Boiler(x) Mod1_Firing Rate	NVUI, Value, SNVT_switch	3,4	Holding Reg.	AI	%
18	118	218	318	418	518	618	718	Boiler(x) Mod1_Water Flow		3,4	Holding Reg.	AI	Litres/Min
19	119	219	319	419	519	619	719	Boiler(x) Mod1_Supply Temp.	NVUI, -, -	3,4	Holding Reg.	AI	Deg F
20	120	220	320	420	520	620	720	Boiler(x) Mod1_Return Temp	NVUI, -, -	3,4	Holding Reg.	AI	Deg F
21	121	221	321	421	521	621	721	Boiler(x) Mod1_Flue Temp	NVUI, -, -	3,4	Holding Reg.	AI	Deg F
22	122	222	322	422	522	622	722	Boiler(x) Mod1_Hours		3,4	Holding Reg.	AI	Hours
23	123	223	323	423	523	623	723	Boiler(x) Mod2_State	NVUI, -, -	3,4	Holding Reg.	AI	No Unit
24	124	224	324	424	524	624	724	Boiler(x) Mod2_Error Code	NVUI, -, -	3,4	Holding Reg.	AI	No Unit
25	125	225	325	425	525	625	725	Boiler(x) Mod2_SP	NVUI, -, -	3,4	Holding Reg.	AI	Deg F
26	126	226	326	426	526	626	726	Boiler(x) Mod2_Firing Rate	NVUI, Value, SNVT_switch	3,4	Holding Reg.	AI	%
27	127	227	327	427	527	627	727	Boiler(x) Mod2_Water Flow		3,4	Holding Reg.	AI	Litres/Min
28	128	228	328	428	528	628	728	Boiler(x) Mod2_Supply Temp.	NVUI, -, -	3,4	Holding Reg.	AI	Deg F
29	129	229	329	429	529	629	729	Boiler(x) Mod2_Return Temp	NVUI, -, -	3,4	Holding Reg.	AI	Deg F
30	130	230	330	430	530	630	730	Boiler(x) Mod2_Flue Temp	NVUI, -, -	3,4	Holding Reg.	AI	Deg F
31	131	231	331	431	531	631	731	Boiler(x) Mod2_Hours			Holding Reg.	AI	Hours

4.3 ARRAY BOILER(S) TABLE

Array BACnet MS/TP, BACnet IP, Modbus TCP, LONworks, and Metasys N2, Ethernet IP													
32	132	232	332	432	532	632	732	Boiler(x) Mod3_State	NVUI, -, -	3,4	Holding Reg.	AI	No Unit
33	133	233	333	433	533	633	733	Boiler(x) Mod3_Error Code	NVUI, -, -	3,4	Holding Reg.	AI	No Unit
34	134	234	334	434	534	634	734	Boiler(x) Mod3_SP	NVUI, -, -	3,4	Holding Reg.	AI	Deg F
35	135	235	335	435	535	635	735	Boiler(x) Mod3_Firing Rate	NVUI, Value, SNVT_switch	3,4	Holding Reg.	AI	%
36	136	236	336	436	536	636	736	Boiler(x) Mod3_Water Flow	NVUI, -, -	3,4	Holding Reg.	AI	Litres/Min
37	137	237	337	437	537	637	737	Boiler(x) Mod3_Supply Temp.	NVUI, -, -	3,4	Holding Reg.	AI	Deg F
38	138	238	338	438	538	638	738	Boiler(x) Mod3_Return Temp	NVUI, -, -	3,4	Holding Reg.	AI	Deg F
39	139	239	339	439	539	639	739	Boiler(x) Mod3_Flue Temp	NVUI, -, -	3,4	Holding Reg.	AI	Deg F
40	140	240	340	440	540	640	740	Boiler(x) Mod3_Hours	NVUI, -, -		Holding Reg.	AI	Hours
41	141	241	341	441	541	641	741	Boiler(x) Mod4_State	NVUI, -, -	3,4	Holding Reg.	AI	No Unit
42	142	242	342	442	542	642	742	Boiler(x) Mod4_Error Code	NVUI, -, -	3,4	Holding Reg.	AI	No Unit
43	143	243	343	443	543	643	743	Boiler(x) Mod4_SP	NVUI, -, -	3,4	Holding Reg.	AI	Deg F
44	144	244	344	444	544	644	744	Boiler(x) Mod4_Firing Rate	NVUI, Value, SNVT_switch	3,4	Holding Reg.	AI	%
45	145	245	345	445	545	645	745	Boiler(x) Mod4_Water Flow	NVUI, -, -	3,4	Holding Reg.	AI	Litres/Min
46	146	246	346	446	546	646	746	Boiler(x) Mod4_Supply Temp.	NVUI, -, -	3,4	Holding Reg.	AI	Deg F
47	147	247	347	447	547	647	747	Boiler(x) Mod4_Return Temp	NVUI, -, -	3,4	Holding Reg.	AI	Deg F
48	148	248	348	448	548	648	748	Boiler(x) Mod4_Flue Temp	NVUI, -, -	3,4	Holding Reg.	AI	Deg F
49	149	249	349	449	549	649	749	Boiler(x) Mod4_Hours	NVUI, -, -		Holding Reg.	AI	Hours
50	150	250	350	450	550	650	750	Boiler(x) Mod5_State	NVUI, -, -	3,4	Holding Reg.	AI	No Unit
51	151	251	351	451	551	651	751	Boiler(x) Mod5_Error Code	NVUI, -, -	3,4	Holding Reg.	AI	No Unit
52	152	252	352	452	552	652	752	Boiler(x) Mod5_SP	NVUI, -, -	3,4	Holding Reg.	AI	Deg F
53	153	253	353	453	553	653	753	Boiler(x) Mod5_Firing Rate	NVUI, Value, SNVT_switch	3,4	Holding Reg.	AI	%
54	154	254	354	454	554	654	754	Boiler(x) Mod5_Water Flow	NVUI, -, -	3,4	Holding Reg.	AI	Litres/Min
55	155	255	355	455	555	655	755	Boiler(x) Mod5_Supply Temp.	NVUI, -, -	3,4	Holding Reg.	AI	Deg F
56	156	256	356	456	556	656	756	Boiler(x) Mod5_Return Temp	NVUI, -, -	3,4	Holding Reg.	AI	Deg F
57	157	257	357	457	557	657	757	Boiler(x) Mod5_Flue Temp	NVUI, -, -	3,4	Holding Reg.	AI	Deg F
58	158	258	358	458	558	658	758	Boiler(x) Mod5_Hours	NVUI, -, -		Holding Reg.	AI	Hours
59	159	259	359	459	559	659	759	Boiler(x) Mod6_State	NVUI, -, -	3,4	Holding Reg.	AI	No Unit
60	160	260	360	460	560	660	760	Boiler(x) Mod6_Error Code	NVUI, -, -	3,4	Holding Reg.	AI	No Unit
61	161	261	361	461	561	661	761	Boiler(x) Mod6_SP	NVUI, -, -	3,4	Holding Reg.	AI	Deg F
62	162	262	362	462	562	662	762	Boiler(x) Mod6_Firing Rate	NVUI, Value, SNVT_switch	3,4	Holding Reg.	AI	%
63	163	263	363	463	563	663	763	Boiler(x) Mod6_Water Flow	NVUI, -, -	3,4	Holding Reg.	AI	Litres/Min
64	164	264	364	464	564	664	764	Boiler(x) Mod6_Supply Temp.	NVUI, -, -	3,4	Holding Reg.	AI	Deg F
65	165	265	365	465	565	665	765	Boiler(x) Mod6_Return Temp	NVUI, -, -	3,4	Holding Reg.	AI	Deg F
66	166	266	366	466	566	666	766	Boiler(x) Mod6_Flue Temp	NVUI, -, -	3,4	Holding Reg.	AI	Deg F
67	167	267	367	467	567	667	767	Boiler(x) Mod6_Hours	NVUI, -, -		Holding Reg.	AI	Hours

4.3 ARRAY BOILER(S) TABLE

Array BACnet MS/TP, BACnet IP, Modbus TCP, LONworks, and Metasys N2, Ethernet IP													
68	168	268	368	468	568	668	768	Boiler Mod7_State	NVUI, -, -	3,4	Holding Reg.	AI	No Unit
69	169	269	369	469	569	669	769	Boiler Mod7_Error Code	NVUI, -, -	3,4	Holding Reg.	AI	No Unit
70	170	270	370	470	570	670	770	Boiler Mod7_SP	NVUI, -, -	3,4	Holding Reg.	AI	Deg F
71	171	271	371	471	571	671	771	Boiler Mod7_Firing Rate	NVUI, Value, SNVT_switch	3,4	Holding Reg.	AI	%
72	172	272	372	472	572	672	772	Boiler Mod7_Water Flow	NVUI, -, -	3,4	Holding Reg.	AI	Litres/Min
73	173	273	373	473	573	673	773	Boiler Mod7_Supply Temp.	NVUI, -, -	3,4	Holding Reg.	AI	Deg F
74	174	274	374	474	574	674	774	Boiler Mod7_Return Temp	NVUI, -, -	3,4	Holding Reg.	AI	Deg F
75	175	275	375	475	575	675	775	Boiler Mod7_Flue Temp	NVUI, -, -	3,4	Holding Reg.	AI	Deg F
76	176	276	376	476	576	676	776	Boiler Mod7_Hours	NVUI, -, -		Holding Reg.	AI	Hours
77	177	277	377	477	577	677	777	Boiler(x) Mod8_State	NVUI, -, -	3,4	Holding Reg.	AI	No Unit
78	178	278	378	478	578	678	778	Boiler(x) Mod8_Error Code	NVUI, -, -	3,4	Holding Reg.	AI	No Unit
79	179	279	379	479	579	679	779	Boiler(x) Mod8_SP	NVUI, -, -	3,4	Holding Reg.	AI	Deg F
80	180	280	380	480	580	680	780	Boiler(x) Mod8_Firing Rate	NVUI, Value, SNVT_switch	3,4	Holding Reg.	AI	%
81	181	281	381	481	581	681	781	Boiler(x) Mod8_Water Flow	NVUI, -, -	3,4	Holding Reg.	AI	Litres/Min
82	182	282	382	482	582	682	782	Boiler(x) Mod8_Supply Temp.	NVUI, -, -	3,4	Holding Reg.	AI	Deg F
83	183	283	383	483	583	683	783	Boiler(x) Mod8_Return Temp	NVUI, -, -	3,4	Holding Reg.	AI	Deg F
84	184	284	384	484	584	684	784	Boiler(x) Mod8_Flue Temp	NVUI, -, -	3,4	Holding Reg.	AI	Deg F
85	185	285	385	485	585	685	785	Boiler(x) Mod8_Hours	NVUI, -, -		Holding Reg.	AI	Hours

4.3.1 ARRAY STATE/ERROR TABLE

STATE TABLE (Boiler(x)Mod(x)_State)		
Profile		DESCRIPTION
0	INITIALIZATION	INITIALIZATION VARIABLES FOR RESET (START-UP) STATE
1	RESET	RESET (START-UP) STATE
2	STANDBY	STANDBY
3or4	PRE-PURGE	PRE-PURGING
5or6	PRE-IGNITION	PRE-IGNITION
7	FLAME PROVING	FLAME PROVING
8or9	BURN	BURN
10or11	POST PURGE	POST-PURGE
12	ERROR	ERROR
13	ALARM	ALARM
14	WARNING	WARNING
15	BURNER BOOT	REBOOTING CONTROLLER

4.3.1 ARRAY STATE/ERROR TABLE

ERROR TABLE (Boiler(x)Mod(x)_Error Code)	
0	E2PROM_READ_ERROR
1	IGNIT_ERROR
2	GV_RELAY_ERROR
3	SAFETY_RELAY_ERROR
4	BLOCKING_TOO_LONG
5	FAN_ERROR_NOT_RUNNING
6	FAN_ERROR_TOO_SLOW
7	FAN_ERROR_TOO_FAST
8	RAM_ERROR
9	WRONG_EEPROM_SIGNATURE
10	E2PROM_ERROR
11	STATE_ERROR
12	ROM_ERROR
13	APS_NOT_OPEN
14	APS_NOT_CLOSED
15	MAX_TEMP_ERROR
16	
17	STACK_ERROR
18	INSTRUCTION_ERROR
19	ION_CHECK_FAILED
20	FLAME_OUT_TOO_LATE
21	FLAME_BEFORE_IGNIT
22	TOO_MANY_FLAME_LOSS
23	CORRUPTED_ERROR_NR
24	FLUE_SWITCH_NOT_CLOSING
25	SUPPLY_DIFF_ERROR
26	TFLUE_DIFF_ERROR
27	FILLING_TOO_MUCH
28	FILL_TIME_ERROR
29	PSM_ERROR
30	REGISTER_ERROR
31	T_EXCHANGE_LOCK_ERROR
32	T_EXCHANGE_DIFF_ERROR
33	LWCO_1_ERROR
34	LWCO_2_ERROR
35	GAS_PRESSURE_ERROR
36	AIR_DAMPER_LOCKING
37	FLUE_PRESSURE_LOCKING

BLOCKING	
100	WD_ERROR_RAM
101	WD_ERROR_RAM
102	WD_ERROR_STACK
103	WD_ERROR_REGISTER
104	WD_ERROR_XRL
105	HIGH_TEMP_ERROR
106	REFHI_TOO_HIGH
107	REFHI_TOO_LOW
108	REFLO_TOO_HIGH
109	REFLO_TOO_LOW
110	REFHI2_TOO_HIGH
111	REFHI2_TOO_LOW
112	REFLO2_TOO_HIGH
113	REFLO2_TOO_LOW
114	FALSE_FLAME
115	LOW_WATER_PRESSURE_ERROR
116	LOW_WATER_PRESSURE_SENSOR
117	BLOCKED_DRAIN
118	WD_COMM_ERROR
119	RETURN_OPEN
120	SUPPLY_OPEN
121	SUPPLY2_OPEN
122	DHW_OPEN
123	FLUE_OPEN
124	FLUE2_OPEN
125	OUTDOOR_OPEN
126	RETURN_SHORTED
127	SUPPLY_SHORTED
128	SUPPLY2_SHORTED
129	DHW_SHORTED
130	FLUE_SHORTED
131	FLUE2_SHORTED
132	OUTDOOR_SHORTED
133	RESET_BUTTON_ERROR
135	T_EXCHANGE_BLOCK_ERROR
136	T_CHIMNEY_OPEN
137	T_EXCHANGE1_OPEN
138	T_EXCHANGE2_OPEN

4.3.1 ARRAY STATE/ERROR TABLE

139	T_SELECTION1_OPEN
140	T_SELECTION2_OPEN
141	T_SELECTION3_OPEN
142	T_OPTIONAL1_OPEN
143	T_OPTIONAL2_OPEN
144	T_AMBIENT_OPEN
145	T_CHIMNEY_CLOSED
146	T_EXCHANGE1_CLOSED
147	T_EXCHANGE2_CLOSED
148	T_SELECTION1_CLOSED
149	T_SELECTION2_CLOSED
150	T_SELECTION3_CLOSED
151	T_OPTIONAL1_CLOSED
152	T_OPTIONAL2_CLOSED
153	T_AMBIENT_CLOSED
154	WD_CONFIG_ERROR
155	FLUE_PRESSURE_ERROR
156	AIR_DAMPER_ERROR
157	T_SECONDARY_SUPPLY_OPEN
158	T_SECONDARY_RETURN_OPEN
159	T_SECONDARY_SUPPLY_CLOSED
160	T_SECONDARY_RETURN_CLOSED
161	FILL_WARNING
162	FLUE_BLOCKED
163	LOWEXFLOW_PROTECTION

WARNINGS	
200	CC_LOSS_COMMUNICATION
201	CC_LOSS_BOILER_COMM
202	OUTDOOR_WRONG
203	T_SYSTEM_WRONG
204	T_CASCADE_WRONG
255	NOTHING IS WRONG

RIELLO BURNERS NORTH AMERICA

35 Pond Park Road
Hingham, Massachusetts,
U.S.A. 02043

1-800-4-RIELLO
1-800-474-3556

http://www.riello.ca

2165 Meadowpine Blvd
Mississauga, Ontario
Canada L5N 6H6