cod. 20219426 rev. 2 10/2026

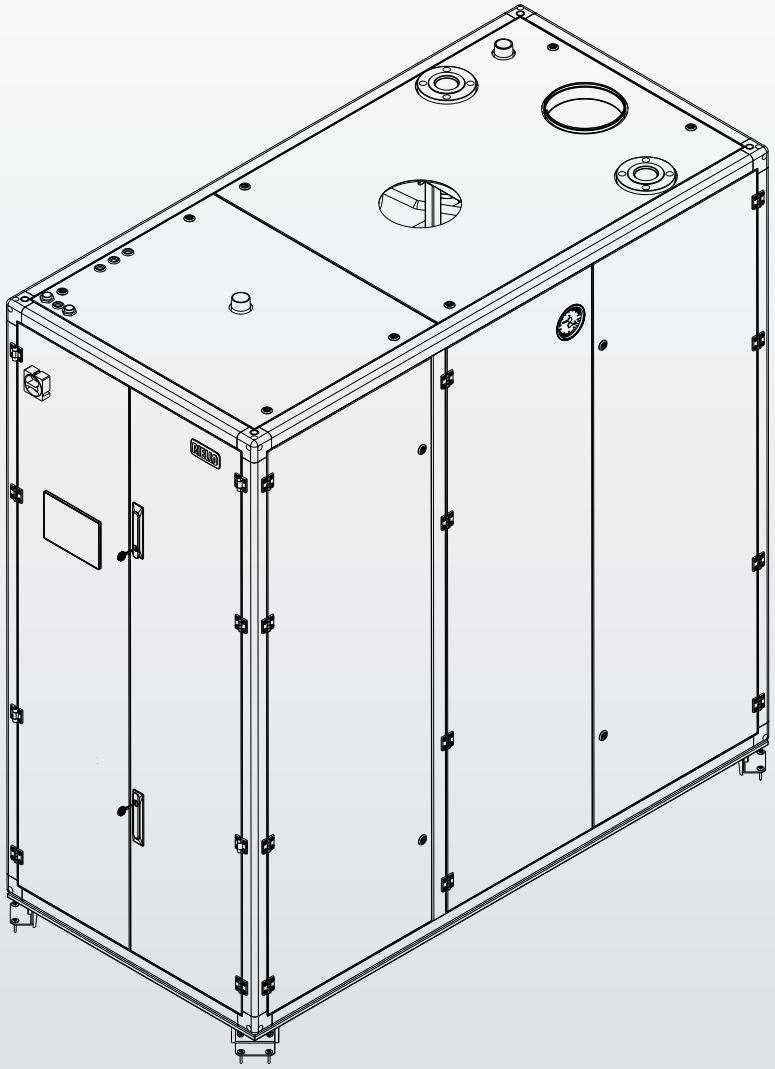

ARRAY TH20

Installation and Operation Manual

RIELLO

Heating Engineer.
congratulations for purchasing a RIELLO S.p.A. instantaneous water heater. This appliance ensures maximum comfort over a long life, with high reliability, efficiency, performance, quality and safety.
This manual provides information that is essential to the installation of the appliance. Used in conjunction with your own knowledge and expertise, it will enable you to install the appliance quickly, easily and correctly.

Please accept our thanks and our congratulations on your choice of product.
RIELLO S.p.A.

CONFORMITY

U M H

The information contained in this manual is subject to change without notice from RIELLO S.p.A. makes no warranty of any kind with respect to this material, including but not limited to implied warranties of merchantability and fitness for a particular application. RIELLO is not liable for errors appearing in this manual, nor for incidental or consequential damages occurring in connection with the furnishing, performance, or use of this material.

RANGE

MODEL	CODE
ARRAY TH20 1000-300 SW/2A	20230365
ARRAY TH20 1500-450 SW/2A	20221004

WARNING: If the information in these instructions is not followed exactly, a fire or explosion may result causing property damage, personal injury or death.

WARNING: Do not store or use gasoline or other flammable vapors and liquids in the vicinity of this or any other appliance.

WHAT TO DO IF YOU SMELL GAS:
- Do not try to light any appliance.
- Do not touch any electrical switch; do not use any phone in your building.
- Immediately call your gas supplier from a neighbor's phone. Follow the gas supplier's instructions.
- If you cannot reach your gas supplier, call the fire department.

Installation and service must be performed by a qualified installer, service agency.

FOR YOUR SAFETY: Improper installation and/or operation could create carbon monoxide gas in flue gases which could cause serious injury, property damage, or death. Improper installation and/or operation will void the warranty.

1 GENERAL 4
1.1 Warnings & Cautions 4
1.2 Safety Instructions 5
1.2.1 General safety. 6
1.2.2 Scalding time/temperature relationships 6
1.2.3 Antilegionella 6
1.3 General Warning and Regulations 7
1.4 Compliance with Standards and Regulations 7
1.5 Operating Limits of the instantaneous water heater 7
1.6 Installation regulations 7

2 PRODUCT DESCRIPTION 8
2.1 Introduction. 8
2.2 Scope of delivery 8
2.3 Environmental Responsibility/Disposal 8
2.4 Emergency Shutdown 8
2.5 Size and Connections 9
2.6 Technical data 10
2.7 Instantaneous water heater flow rate/pressure drop graphs (at the domestic hot water hydraulic connections) 12
2.8 Structure 13
2.9 Logical scheme 14

3 INSTALLATION. 16
3.1 Introduction. 16
3.2 Receiving the Unit 16
3.3 Unpacking 16
3.4 Site Preparation 16
3.4.1 Installation Clearances 16
3.4.2 Setting the Unit. 17
3.5 Appliance Location 18
3.6 Water Quality Guidelines Primary side 18
3.7 Piping 19
3.8 Safety devices 19
3.8.1 Low Water Cutoff. 19
3.8.2 High Limit Safety Switch 19
3.8.3 Pressure Relief Valve Installation 19
3.8.4 Condensate Drain and Piping 20
3.9 Gas Supply Piping. 21
3.9.1 Gas Supply Specifications 22
3.9.2 Manual Gas Shutoff Valve 22
3.9.3 Adjusting and Setting O_2 Limits 22
3.10 AC Electrical Power Wiring. 23
3.10.1 Electrical Power Requirements 23
3.10.2 Emergency Button 24
3.11 Field Control Wiring 24

4 CONNECTIVITY 25
4.1 Bacnet IP connection 25
4.1.1 Change the PLC IP address. 26
4.2 Modbus BMS settings 27
4.3 Venting 30
4.4 Combustion Air. 33
4.4.1 Combustion Air From Outside the Building 33
4.4.2 Combustion Air From Inside the Building 33
4.4.3 Ducted Combustion Air 33

5 COMMISSIONING 34
5.1 Introduction. 34
5.2 Filling the Condensate System 34
5.3 Filling the Primary Circuit 34
5.4 Warnings Concerning the Gas Supply 34
5.4.1 Gas Type guideline 34
5.5 Appliance Startup Procedure 35
5.6 SET the Date & Time:. 35
5.7 Configure the appliance 36
5.8 Configure the Antilegionella 36
5.9 Configure the DHW setpoint 37
5.10 Explanation of the boiler screen. 37
5.10.1 Performance Screen 38
5.11 Delete graph data 38
5.12 Boiler Screen 39
5.12.1 Boiler Error Screen 40
5.12.2 Service Screen. 40
5.12.3 PLC Error Screen. 40
5.12.4 Dirty Plate Detection 41
5.13 ECO MODE. 41
5.14 External recirculation pump config. 42
5.15 INFO 42

6 SHUTDOWN 42
6.1 Shutting Down the Heating System 42
6.2 Shutting Down the Heating System in an Emergency .. 42

7 ENVIRONMENTAL PROTECTION/DISPOSAL 42

8 WIRING DIAGRAMS. 43

APPENDIX A - MAINTENANCE. 51

APPENDIX B - TROUBLESHOOTING TABLE 54

APPENDIX C - LIST OF PARAMETERS 59

APPENDIX D - LIst of PLC Parameters. 70

APPENDIX E - CONNECTION DIAGRAM 71

APPENDIX F - VENTING SIZE DATA. 72

APPENDIX G - EXHAUST TERMINALS AND AIR INLET CLEARANCES 73

APPENDIX H - SYSTEM DIAGRAM. 74

The following symbols are used in this manual:

⚠ **CAUTION! =** Identifies actions that require caution and adequate preparation.

⊖ **STOP! =** Identifies actions that you MUST NOT do.

1 GENERAL

The **ARRAY TH20** is an indirect, instantaneous water heater designed to meet a wide range of domestic hot water needs, suitable for water (potable) heating only.
It ensures precise temperature control even under fluctuating demand, without the need for domestic water storage. This performance is enabled by advanced controls, including feed-forward sensing and a rapid-response electronic control valve.

Note: in this manual when the term "boiler" is used, it refers to instantaneous water heater.

The control valve dynamically adjusts the flow of the primary heating side, delivering the exact amount needed to match the domestic hot water power demand on the secondary side.

The **ARRAY TH20** Series of instantaneous water heater has been designed in compliance with the CSD-1 code.

When installed and operated in accordance with this Instruction Manual, these instantaneous water heaters comply with the NOx emission standards outlined in:

South Coast Air Quality Management District (SCAQMD), Rule 1146.2

Whether used in singular or modular arrangements, the **ARRAY TH20** series offer the maximum venting flexibility with minimum installation space requirements. These instantaneous water heaters are Category IV, positive pressure appliances. Single and/or multiple breeched units are capable of operation in the following vent configurations:

- Conventional, Vertical Conventional.
- Sidewall Conventional, Direct Vent.
- Vertical Sealed, Direct Vent, Horizontal

These instantaneous water heaters are capable of being vented utilizing PP, CPVC, Stainless steel AL29-4C and AISI 316L vent systems.
Vent material must be tested and approved for the intended application.

⚠ **IMPORTANT:** Unless otherwise specified, all descriptions and procedures provided in this Installation & Operation Manual apply to the **ARRAY TH20** series of instantaneous water heaters.

1.1 Warnings & Cautions

Installers and operating personnel MUST, at all times, observe all safety regulations. The following warnings and cautions are general and must be given the same attention as specific precautions included in these instructions.
In addition to all the requirements included in this RIELLO Instruction Manual, the installation of units must be installed in accordance with local codes or, in the absence of local codes, the National Fuel Gas Code, ANSI Z223.1/NFPA 54 or the CSA B149.1,Natural Gas and Propane Installation Code
Where applicable, the equipment shall be installed in accordance with the current Installation Code for Gas Burning Appliances and Equipment, CSA B149.1 and applicable Provincial regulations for the class; which should be carefully followed in all cases.
Authorities having jurisdiction should be consulted before installations are made.
See pages 5 - 17 - 22 for important information regarding installation of units within the Commonwealth of Massachusetts.

⚠ **IMPORTANT:** This Instruction Manual is an integral part of the product and must be maintained in legible condition. It must be given to the user by the installer and kept in a safe place for future reference.

⚠ **WARNING:** Do not use matches, candles, flames, or other sources of ignition to check for gas leaks.

⚠ **WARNING:** Fluids under pressure may cause injury to personnel or damage to equipment when released. Be sure to shut off all incoming and outgoing water shutoff valves, carefully decrease all trapped pressures to zero before performing maintenance.

⚠ **WARNING:** Before attempting to perform any maintenance on the unit, shut off all gas and electrical inputs to the unit.

⚠ **WARNING:** The exhaust vent pipe of the unit operates under a positive pressure and therefore must be completely sealed to prevent leakage of combustion products into living spaces.

⚠ **WARNING:** Electrical voltages up to 120 VAC may be used in this equipment. Therefore the cover on the unit's power box (located behind the front panel door) must be installed at all times, except during maintenance and servicing.

⚠ **WARNING:** Metal casing is an integral part of the instantaneous water heaters. All panels, doors and seals must always be in place, fully closed, during instantaneous water heater's operation, to prevent any gas or flue leakage in case of failure.

⚠ **CAUTION:** Many soaps used for gas pipe leak testing are corrosive to metals. The piping must be rinsed thoroughly with clean water after leak checks have been completed.

⛔ **CAUTION**: DO NOT use this instantaneous water heater if any part has been submerged under water. Call a qualified service technician to inspect and replace any part that has been subjected to water.

NOTE: It is necessary to install a limit thermostat outside the instantaneous water heater. This is required because, in the event of a DHW out sensor failure, the temperature may become excessively high.

1.2 Safety Instructions

Observe these instructions for your safety.
The burner and control must be correctly installed and adjusted to ensure safe and economical operation of the instantaneous water heater.
Read this installation and maintenance manual carefully and note the details on the product nameplate before placing the instantaneous water heater in operation.

Risk of fatal injury from explosion of flammable gases
If you smell gas there is a danger of explosion.
- Never work on gas lines unless you are a licensed contractor/ gas fitter.
- Make sure that a licensed contractor/gas fitter installs the instantaneous water heater, connects gas and vent, places the product in operation, connects the electrical power and maintains and repairs the unit.
- No open flame! No smoking! Do not use lighters.
- Prevent spark formation. Do not operate electrical switches, including telephones, plugs or door bells.
- Close main gas valve.
- Open doors and windows.
- Warn other occupants of the building, but do not use doorbells.
- Call gas company from outside the building.
- If gas can be heard escaping, leave the building immediately, prevent other people from entering, notify police and fire departments from outside the building

Risk to life from electrical shock.
- Disconnect the power supply to the unit heating system before conducting any work on it, e.g. turn off the heating system emergency switch outside the unit room.
- It is not sufficient just to turn off the control.
- Do not carry out electrical work unless you are qualified for this type of work.
- Before servicing, disconnect electrical power and lock out to prevent accidental reconnection.
- Observe and follow the local, state and federal installation regulations.

Risk of fatal injury from flue gas poisoning
Insufficient ventilation or combustion air availability may cause dangerous flue gas leaks and accumulation.
- Make sure that inlets and outlets are not reduced in size, restricted, or blocked.
- If faults are not corrected immediately, the instantaneous water heater must not be operated until all faults have been corrected.
- Inform the system operator and/or owner of the fault and the danger in writing.

When working on the flue gas venting equipment or vent damper, leakage of flue gases may endanger the lives of people.
- Carefully observe proper operation of the vent damper. Do not start up the instantaneous water heater unless the vent damper is operating properly.
- Use only genuine OEM parts when replacing parts.
- When replacing the vent damper, install the new one in the specified position.

Risk to life from poisoning due to flues gas leakage
- If the blocked vent switch trips frequently, the fault must be corrected and proper operation of the blocked vent switch test must be conducted.

Risk of fatal injury from neglecting your own safety in case of emergency, such as with a fire
- Never put yourself at risk. Your own safety must always take priority.

Fire danger due to flammable materials or liquids
- Make sure that there are no flammable materials or liquids in the immediate vicinity of the instantaneous water heater.

Installation and maintenance
- Observe all current standards and guidelines applicable to the installation and operation of the product heating system as applicable in your state or local jurisdiction.
- Clean and service the instantaneous water heater system once a year. Check that the complete heating system operates correctly.
- Immediately correct all faults to prevent system damage.
- Only use original RIELLO spare parts. Losses caused by the use of parts not supplied by RIELLO are excluded from the RIELLO warranty.

INSTALLATION OF CARBON MONOXIDE DETECTORS
After prolonged shutdown, the startup procedures and the safety device test procedures of this manual shall be performed to verify all system/operating parameters.
If there is an emergency, turn off the electrical power supply to the RIELLO instantaneous water heater and close the manual gas valve located upstream of the unit. The installer must identify the emergency shut-off device.

IMPORTANT – FOR MASSACHUSETTS INSTALLATIONS
Instantaneous water heater Installations within the Commonwealth of Massachusetts must conform to the following requirements:

- The instantaneous water heater must be installed by a plumber or a gas fitter who is licensed within the Commonwealth of Massachusetts.
- Prior to unit operation, the complete gas train and all connections must be leak tested using a non-corrosive soap.
- The vent termination must be located a minimum of 4 feet above grade level. If side wall venting is used, the installation must conform to the following requirements extracted from 248 CMR 5.08 (2):

(a) For all side wall horizontally vented gas fueled equipment installed in every dwelling, building or structure used in whole or in part for residential purposes, including those owned or operated by the Commonwealth and where the side wall exhaust vent termination is less than seven (7) feet above finished grade in the area of the venting, including but not limited to decks and porches, the following requirements shall be satisfied:

1. INSTALLATION OF CARBON MONOXIDE DETECTORS
At the time of installation of the side wall horizontal vented gas fueled equipment, the installing plumber or gas fitter shall observe that a hard wired carbon monoxide detector with an alarm and battery back-up is installed on the floor level where the gas equipment is to be installed.
In addition, the installing plumber or gas fitter shall observe that a battery operated or hard wired carbon monoxide detector with an alarm is installed on each additional level of the dwelling, building, or structure served by the side wall horizontal vented gas fueled equipment. It shall be the responsibility of the property owner to secure the services of qualified licensed professionals for the installation of the hard wired carbon monoxide detectors.

a. In the event that the side wall horizontally vented gas fueled equipment is installed in a crawl space or an attic, the hard wired carbon monoxide detector with alarm and battery back-up may be installed on the next adjacent floor level.
b. In the event that the requirements of this subdivision cannot be met at the time of completion of installation, the owner shall have a period of thirty (30) days to comply with the above requirements; provided, however, that during said thirty (30) days period, a battery operated carbon monoxide detector with an alarm shall be installed.

2. APPROVED CARBON MONOXIDE DETECTORS
Each carbon monoxide detector as required in accordance with the above provisions shall comply with NFPA 720 and be ANSI/UL 2034 listed and IAS certified.

3. SIGNAGE
A metal or plastic identification plate shall be permanently mounted to the exterior of the building at a minimum height of eight (8) feet above grade directly in line with the exhaust vent terminal for the horizontally vented gas fueled heating appliance or equipment.
The sign shall read, in print size no less than one-half (1/2) inch in size. **"GAS VENT DIRECTLY BELOW. KEEP CLEAR OF ALL OBSTRUCTIONS"**.

4. INSPECTION
The state or local gas inspector of the side wall horizontally vented gas fueled equipment shall not approve the installation unless, upon inspection, the inspector observes carbon monoxide detectors and signage installed in accordance with the provisions of 248 CMR 5.08(2)(a)1 through 4.

(b) EXEMPTIONS:
The following equipment is exempt from 248 CMR 5.08(2)(a)1 through 4:
1. the equipment listed in Chapter 10 entitled "Equipment Not Required To Be Vented" in the most current edition of NFPA 54 as adopted by the Board;
2. product Approved side wall horizontally vented gas fueled equipment installed in a room or structure separate from the dwelling, building or structure used in whole or in part for residential purposes.

(c) MANUFACTURER REQUIREMENTS – GAS EQUIPMENT VENTING SYSTEM PROVIDED
When the manufacturer of Product Approved side wall horizontally vented gas equipment provides a venting system design or venting system components with the equipment, the instructions provided by the manufacturer for installation of the equipment and the venting system shall include:
1. detailed instructions for the installation of the venting system design or the venting system components;
2. a complete parts list for the venting system design or venting system.

(d) MANUFACTURER REQUIREMENTS – GAS EQUIPMENT VENTING SYSTEM NOT PROVIDED
When the manufacturer of a Product Approved side wall horizontally vented gas fueled equipment does not provide the parts for venting the flue gases, but identifies "special venting systems", the following requirements shall be satisfied by the manufacturer:
1. the referenced "special venting system" instructions shall be included with the appliance or equipment installation instructions;
2. the "special venting systems" shall be Product Approved by the Board and the instructions for that system shall include a parts list and detailed installation instructions.

(e) A copy of all installation instructions for all Product Approved side wall horizontally vented gas fueled equipment, all venting instructions, all parts lists for venting instructions and/or all venting design instructions shall remain with the appliance or equipment at the completion of the installation.

[End of Extracted Information From 248 CMR 5.08 (2)]

1.2.1 General safety



To meet domestic hot water use needs, the high limit safety control on this instantaneous water heater is adjustable up to 158°F (70°C) and the ANTILEGIONELLA adjustable setpoint is max 185°F (85°C).
Water temperatures over 125°F (52°C) can cause instant severe burns or death from scalds.
When supplying general purpose hot water, the recommended initial setting for the temperature control is 130°F (54°C).
Safety and energy conservation are factors to be considered when setting the water temperature on the thermostat.
The most energy-efficient operation will result when the temperature setting is the lowest that satisfies the needs of the application.
Children, disabled and elderly are at highest risk of being scalded.
- Feel water before bathing or showering.
- Temperature limiting valves are available.

NOTICE: When this boiler is supplying general purpose hot water for use by individuals, a thermostatically controlled mixing valve for reducing point of use water temperature is recommended to reduce the risk of scald injury. Contact a licensed plumber or the local plumbing authority for further information.

Maximum water temperatures occur just after the instantaneous water heater's burner has shut off. To determine the water temperature being delivered, turn on a hot water faucet and place a thermometer in the hot water stream and read the thermometer.

⚠ Parameter 74: do not set the temperature above 122°C (50°C) to avoid scalding.

1.2.2 Scalding time/temperature relationships

The following chart details the relationship of water temperature and time with regard to scald injury and may be used as a guide in determining the safest water temperature for your applications.

Water Temperature	Time to Produce Serious Burn
120 °F (49 °C)	More than 5 minutes
125 °F (52 °C)	1-1/2 to 2 minutes
130 °F (54 °C)	About 30 seconds
135 °F (57 °C)	About 10 seconds
140 °F (60 °C)	Less than 5 seconds
145 °F (63 °C)	Less than 3 seconds
150 °F (66 °C)	About 1-1/2 seconds
155 °F (68 °C)	About 1 second

From FDA guideline.

CAUTION: Hotter water increases the risk of scalding! There is a hot water scald potential if the thermostat is set too high.

1.2.3 Antilegionella

The Appliance is protected against the proliferation of the Legionella bacteria.
The table below shows the approximate time/temperature relationship.

32-68	°F	0-20	°C	Bacteria survive inactive
70-120	°F	21-49	°C	Optimal temperature for bacteria growth
122-131	°F	50-55	°C	90% bacteria death in 5-6 hours
140	°F	60	°C	90% bacteria death in 2 minutes
>158	°F	70	°C	Instant bacteria death

THE INSTALLER/USER IS RESPONSIBLE FOR SETTING THE TEMPERATURE AND TIME IN ACCORDANCE WITH ALL APPLICABLE NATIONAL STANDARDS.

The default procedure is to disinfect only the heat exchanger and nearest adjacent pipe connected to them. All of the cycle times are based on the Supply sensor of the relative Heat exchanger.
The appliance can be configured to disinfect all the sanitary system connected to the instantaneous water heater: all of the cycle times are based on the return temperature sensor of the product.

This procedure may take considerable time, depending on the system size.

1.3 General Warning and Regulations

⚠ **NOTE:** Observe all rules, regulations, standards and guidelines applicable to the installation and operation of this appliance in your country, province, state and local municipality.

⚠ **NOTE:** Valves external to the instantaneous water heater must be fitted with T-handles and condensate piping must be installed in accordance with the State Plumbing Code.

1.4 Compliance with Standards and Regulations

This condensing gas TH20 complies in its design and mode of operation with the American National Standard ANSI Z21.13/ CSA4.9, latest edition for Gas Fired Low Pressure Steam and Hot Water instantaneous water heaters.
Other confirmed approvals and certifications are indicated by labels on the instantaneous water heater.
Where required by the authority having jurisdiction, the installation must conform to the Standard for Controls and Safety Devices for Automatically Fired instantaneous water heaters, ANSI/ASME CSD-1.
Install CO detectors per local regulations. The instantaneous water heater requires yearly maintenance (see "Appendix A - Maintenance").
All the parts that complete the instantaneous water heater are compliant to NSF 372 standard, meaning that such products contain no more than 0.25% lead, as required by the Safe Drinking Water Act and related regulations.

1.5 Operating Limits of the instantaneous water heater

The heat exchangers have been designed and certified in accordance with the ASME appliance and Pressure Vessel Code,Section IV.

The hot water distribution system must comply with all applicable codes and regulations, when replacing an existing instantaneous water heater, it is important to check the condition of the entire hot water distribution system to ensure safe operation. Common practice calls for inspecting an existing system in its entirety and bringing it up to code. All pipework should be properly cleaned and flushed.

1.6 Installation regulations

The installation must conform to the requirements of the authority having jurisdiction or, in the absence of such requirements, to the latest edition of the National Fuel Gas Code, ANSI Z223.1/NFPA 54. In Canada, installation must be in accordance with the requirements of CAN/CSA B149.1, Natural Gas and Propane Installation Code.
Where required by local, state and federal regulations, the system must comply with the American Society of Mechanical Engineers Safety Code for Controls and Safety Devices for Automatically Fired **instantaneous water heaters (ASME CSD-1)**.
The hot water distribution system must comply with all applicable codes and regulations, when replacing an existing instantaneous water heater, it is important to check the condition of the entire hot water distribution system to ensure safe operation.
Valves external to the instantaneous water heater must be fitted with T-handles and condensate piping must be installed in accordance with the State Plumbing Code.

NOTICE:
This instantaneous water heater must be installed by a licensed contractor/ gas fitter. Failure to do so shall void the product warranty.
The instantaneous water heater is intended only for the use for which it was specifically designed and built. RIELLO is hereby excluded from any liability for damages caused to persons, animals or property resulting from installation errors, improper adjustment, maintenance or use.
In order to ensure safety and correct operation, the installation shall always take place in full compliance with the applicable codes and following the instructions provided by the manufacturer and must always be carried out by a licensed contractor/gas fitter only.
The equipment must be installed in an appropriate place and in combination with appropriate systems as specified by code.
The unit may be exposed to temperatures between 5° F (-15°C) and 158° F (70°C) in its original packaging.
After removing the packaging check the integrity and completeness of delivery and in case of non-compliance, contact your dealer.
If there is a water leak, disconnect the instantaneous water heater from the main power supply, close the water supply and immediately call technical assistance or installer/local contractor.
Periodically check that the condensate drain is free from obstruction, dirt, grease, or other foreign material.
Periodically check the system pressure. System pressure should be checked when the system is in standby mode and no call for heat is present.
Maintenance is mandatory and shall be carried out at least once a year **refer to MAINTENANCE TIME INTERVAL in APPENDIX A - Maintenance.**
This manual shall be read carefully, in order to install and operate the instantaneous water heater appropriately and safely.
The instantaneous water heater installations, settings and service should only be performed by an experienced licensed contractor/gas fitter. End Users should only make adjustments with the assistance of a licensed contractor/gas fitter.
Any maintenance or service, operation or service before disconnecting the appliance from the main power supply is forbidden.
Do not remove or modify safety equipment.
Do not pull or twist the electrical wires from the instantaneous water heater, even if the device is disconnected from the main power supply.
Do not obstruct or reduce the ventilation openings.
Do not install the unit outdoors.
Do not leave any combustibles or containers of flammable substances in the room where the instantaneous water heater is installed.
Keep packaging material out of reach of children as it can be potentially dangerous. Dispose of packaging material as required by law.
The opening of metal casing of the device or removing of the cover are prohibited to the end user. Any service on the instantaneous water heater must be carried out by authorized personnel.
Do not dispose of the product as domestic waste. The separate disposal of the appliance avoids possible negative consequences for the environment and human health deriving from inappropriate disposal. Its materials should be recycled to achieve significant savings in energy and resources.

2 PRODUCT DESCRIPTION

2.1 Introduction

- The **ARRAY TH20** series are designed for large residential, commercial and industrial applications.
- The gas-fired condensing **ARRAY TH20** series are designed to supply domestic hot water. Any other use is prohibited.
- There are several options available for venting. See section "4.3 Venting" for details.
- The quality of the system water is very important. Poor water quality can damage heating systems and instantaneous water heaters due to scale formation and corrosion (section "3.6 Water Quality Guidelines Primary side").

2.2 Scope of delivery

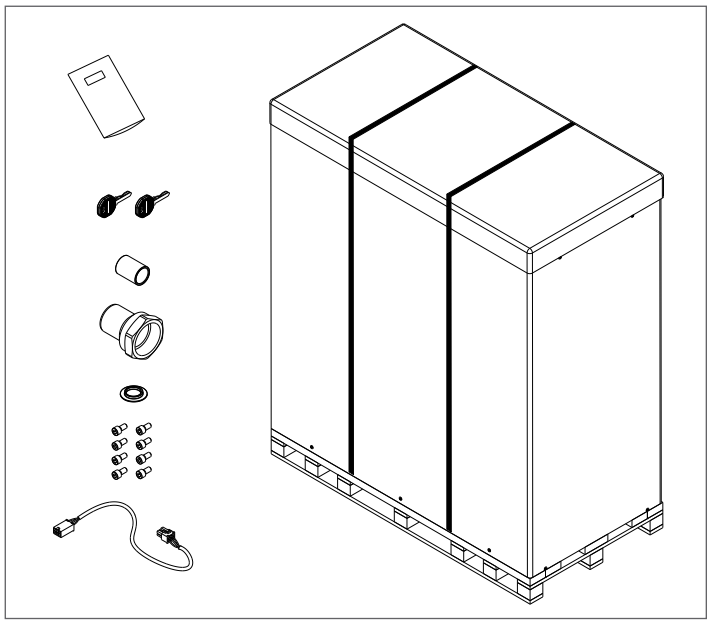

Fig. 1 *Scope of delivery*

Component		Qty	Packaging method
1	Instantaneous water heater	1	Pallet
2	Set of documents for appliance	1	Plastic package
3	Cabinet Keys	1	Cardboard box in the product
4	Condensate Drain Adapter (1" PVC female)	1	Cardboard box in the product
5	Relief Valve Drain Adapter (2.5" NPT female)	1	Cardboard box in the product
6	Bottom caps	1	Cardboard box in the product
7	Screws M10x20	8	Cardboard box in the product
8	Display cable extension connection wiring		Cardboard box in the product

2.3 Environmental Responsibility/Disposal

Environmental responsibility is one of the fundamental company policies of the RIELLO Group.
We regard quality of performance, economy and environmental responsibility as equal objectives. Environmental protection laws and regulations are strictly adhered to.
To protect the environment, we use the best possible technology and materials while also taking into account economic points of view.
Packaging
All packaging materials used are environmentally-friendly and recyclable.

2.4 Emergency Shutdown

If overheating occurs or the gas supply does not shut off, close the manual gas shutoff valve (Fig. 2) located external to the unit.

NOTE: The Installer must identify and indicate the location of the manual emergency shutoff valve.

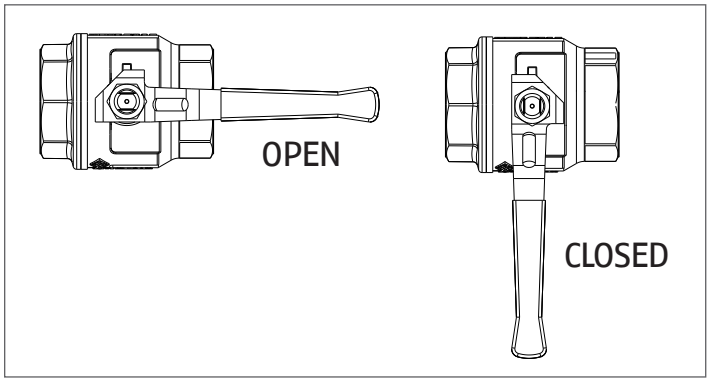

Fig. 2 *Manual Gas Shutoff Valve*

2.5 Size and Connections

ARRAY TH20 1000 – 1500

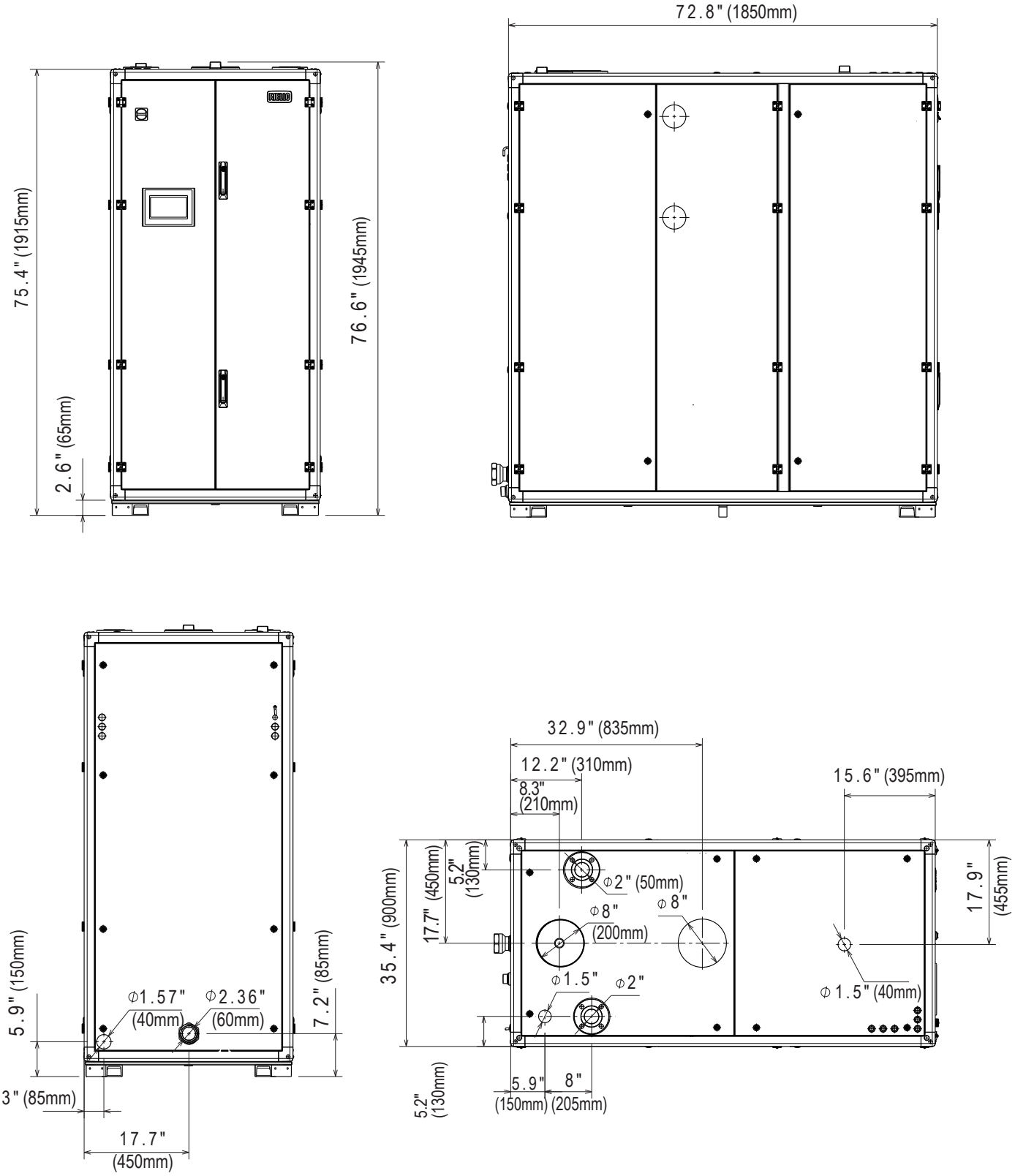

2.6 Technical data

	Unit	ARRAY TH20 1000	ARRAY TH20 1500
Appliance Category		CAT. IV	CAT. IV
Type of Gas		Natural Gas/LP	
Max input rate	Btu/hr	1,000,000	1,500,000
	(kW)	293.0	439.6
Min input rate	Btu/hr	50,000	50,000
	(kW)	15.0	15.0
Turndown	Rate	20:1	30:1
Gas Connection (NPT)	Ø Inch	1.5"	1.5"
Max. NG Pressure	Inch w.c.	20	10.5
	(Kpa)	5.0	2.6
Min. NG Pressure	Inch w.c.	4.0	3.5
	(kPa)	1.0	0.9
Max. LP Pressure	Inch w.c.	20.0	20.0
	(Kpa)	4.98	4.98
Min. LP Pressure	Inch w.c.	8.0	8.0
	(Kpa)	1.99	1.99
Working Range (Natural Gas)	O_2%	4.2 – 5.8	4.2-5.8
Maximum DHW gas flow rate	(CFH)	930.23	1,395.35
	(m^3/h)	26.34	39.52
Minimum DHW gas flow rate	(CFH)	46.51	46.51
	(m^3/h)	1.32	1.32
Max DHW Production [60-21 °C]	GPM	27.3	41
	(m^3/h)	6.20	9.3
Water flow at max power (ΔT 36°F/20°C)	GPM	51.1	76.7
	(m^3/h)	11.6	17.4
Water flow at max power (ΔT 45°F/25°C)	GPM	40.9	61.4
	(m^3/h)	9.3	13.9
Water flow at max power (ΔT 54°F/30°C)	GPM	34.1	51.1
	(m^3/h)	7.7	11.6
Water Connections [ANSI #150 Flange Raised]	Ø Inch	2	2
	mm	50	50
Water Recirculation Inlet [NPT Male]	Ø Inch	1.5	1.5
	mm	40	40
Max DHW safety pressure	PSI	150	150
	bar	10.3	10.3
Bladder tank volume	(liters)	24	24
	Gallon	6.3	6.3
DHW pressure switch threshold	mbar	120	70
	Inch w.c.	48.2	28.1
Precharge bladder tank	bar	2.5	2.5
	PSI	36.3	36.3
Max primary pressure	PSI	75	75
	bar	5.2	5.2
Relief Drain Connection [NPT Female]	Ø Inch	2.5	2.5
	Ø mm	65	65
Condensate Drain connection [PVC Female]	Inch	1.0	1.0
	Ø mm	40.0	40.0
Flue outlet	Ø Inch	8	8
	(Ø mm)	200	200
Suitable Vent Materials		CPVC, PP, Stainless Steel AL29-4C and AISI 316L	
Air Inlet [Round Sheet-Metal Opening]	Ø Inch	8.0	8.0
	(Ø mm)	200	200
Heating Water Capacity	Gallon	29.3	39.1
	(liter)	111	148
DHW Water Capacity	Gallon	7.5	8.5
	(liter)	28.4	32.2
Max DHW operating temperature	°F	158.0	158.0
	(°C)	70	70
"Max DHW operating temperature during Antilegionella"	°F	194	194
	(°C)	90	90
Max HEATING operating temperature	°F	215	215
	(°C)	102.0	102.0
Ambient storage temperature	°F	5 to 158	5 to 158
	(°C)	-15 to 70	-15 to 70
Ambient functioning temperature	°F	32 to 104	32 to 104
	(°C)	0 to 40	0 to 40

Heat exchanger surface area [Per module]	ft^2	43	43
	(m^2)	4	4
Standard Listings & Approvals		ETL, ASME, AHRI, CSD-1, SCAQMD, NSF 372	
Single-Point Electrical Connection		120Vac/1Ph/60Hz	120Vac/1Ph/60Hz
Electrical Supply Terminals		L1,N,GND	L1, N, GND
Electrical FLA**	A	20.5	28.7
Electrical MOCP	A	25	35
Electrical - MCA	A	21	30
Fuse	A	30T	30T
Weight (dry)	lbs	1235	2102
	(kg)	560	953.5
Dimension W x H x D	Inch	35 x 77 x 73	35 x 77 x 73
	(mm)	900 x 1950 x 1850	900 x 1950 x 1850

ARRAY TH20 1000							
DHW side performances							
Temperature				Flow		ΔP	
Inlet	Outlet	Inlet	Outlet				
40 °F	100 °F	4.4 °C	37.8 °C	31 GPM	117.3 l/min	4.7 PSI	324.1 mbar
40 °F	110 °F	4.4 °C	43.3 °C	27 GPM	102.2 l/min	3.5 PSI	241.3 mbar
40 °F	120 °F	4.4 °C	48.9 °C	23 GPM	87.1 l/min	2.7 PSI	186.2 mbar
40 °F	140 °F	4.4 °C	60.0 °C	19 GPM	71.9 l/min	1.8 PSI	124.1 mbar
40 °F	158 °F	4.4 °C	70.0 °C	16 GPM	60.6 l/min	1.3 PSI	89.6 mbar
50 °F	100 °F	10.0 °C	37.8 °C	37 GPM	140.1 l/min	6.6 PSI	455.1 mbar
50 °F	110 °F	10.0 °C	43.3 °C	31 GPM	117.3 l/min	4.7 PSI	324.1 mbar
50 °F	120 °F	10.0 °C	48.9 °C	27 GPM	102.2 l/min	3.5 PSI	241.3 mbar
50 °F	140 °F	10.0 °C	60.0 °C	21 GPM	79.5 l/min	2.2 PSI	151.7 mbar
50 °F	158 °F	10.0 °C	70.0 °C	17 GPM	64.4 l/min	1.5 PSI	103.4 mbar
60 °F	110 °F	15.6 °C	43.3 °C	37 GPM	140.1 l/min	6.6 PSI	455.1 mbar
60 °F	120 °F	15.6 °C	48.9 °C	31 GPM	117.3 l/min	4.7 PSI	324.1 mbar
60 °F	140 °F	15.6 °C	60.0 °C	23 GPM	87.1 l/min	2.7 PSI	186.2 mbar
60 °F	158 °F	15.6 °C	70.0 °C	19 GPM	71.9 l/min	1.9 PSI	131.0 mbar
70 °F	120 °F	21.1 °C	48.9 °C	37 GPM	140.1 l/min	6.6 PSI	455.1 mbar
70 °F	140 °F	21.1 °C	60.0 °C	27 GPM	102.2 l/min	3.5 PSI	241.3 mbar
70 °F	158 °F	21.1 °C	70.0 °C	21 GPM	79.5 l/min	2.3 PSI	158.6 mbar

ARRAY TH20 1500							
DHW side performances							
Temperature				Flow		ΔP	
Inlet	Outlet	Inlet	Outlet				
40 °F	100 °F	4.4 °C	37.8 °C	46 GPM	174.1 l/min	8.9 PSI	613.6 mbar
40 °F	110 °F	4.4 °C	43.3 °C	40 GPM	151.4 l/min	6.6 PSI	455.1 mbar
40 °F	120 °F	4.4 °C	48.9 °C	35 GPM	132.5 l/min	5.0 PSI	344.7 mbar
40 °F	140 °F	4.4 °C	60.0 °C	28 GPM	106.0 l/min	3.2 PSI	220.6 mbar
40 °F	158 °F	4.4 °C	70.0 °C	24 GPM	90.8 l/min	2.3 PSI	158.6 mbar
50 °F	100 °F	10.0 °C	37.8 °C	56 GPM	212.0 l/min	12.8 PSI	882.5 mbar
50 °F	110 °F	10.0 °C	43.3 °C	46 GPM	174.1 l/min	8.9 PSI	613.6 mbar
50 °F	120 °F	10.0 °C	48.9 °C	40 GPM	151.4 l/min	6.6 PSI	455.1 mbar
50 °F	140 °F	10.0 °C	60.0 °C	31 GPM	117.3 l/min	4.0 PSI	275.8 mbar
50 °F	158 °F	10.0 °C	70.0 °C	26 GPM	98.4 l/min	2.8 PSI	193.1 mbar
60 °F	110 °F	15.6 °C	43.3 °C	56 GPM	212.0 l/min	12.8 PSI	882.5 mbar
60 °F	120 °F	15.6 °C	48.9 °C	46 GPM	174.1 l/min	8.9 PSI	613.6 mbar
60 °F	140 °F	15.6 °C	60.0 °C	35 GPM	132.5 l/min	5.0 PSI	344.7 mbar
60 °F	158 °F	15.6 °C	70.0 °C	28 GPM	106.0 l/min	3.4 PSI	234.4 mbar
70 °F	120 °F	21.1 °C	48.9 °C	56 GPM	212.0 l/min	12.8 PSI	882.5 mbar
70 °F	140 °F	21.1 °C	60.0 °C	40 GPM	151.4 l/min	6.6 PSI	455.1 mbar
70 °F	158 °F	21.1 °C	70.0 °C	32 GPM	121.1 l/min	4.2 PSI	289.6 mbar

2.7 Instantaneous water heater flow rate/pressure drop graphs (at the domestic hot water hydraulic connections)

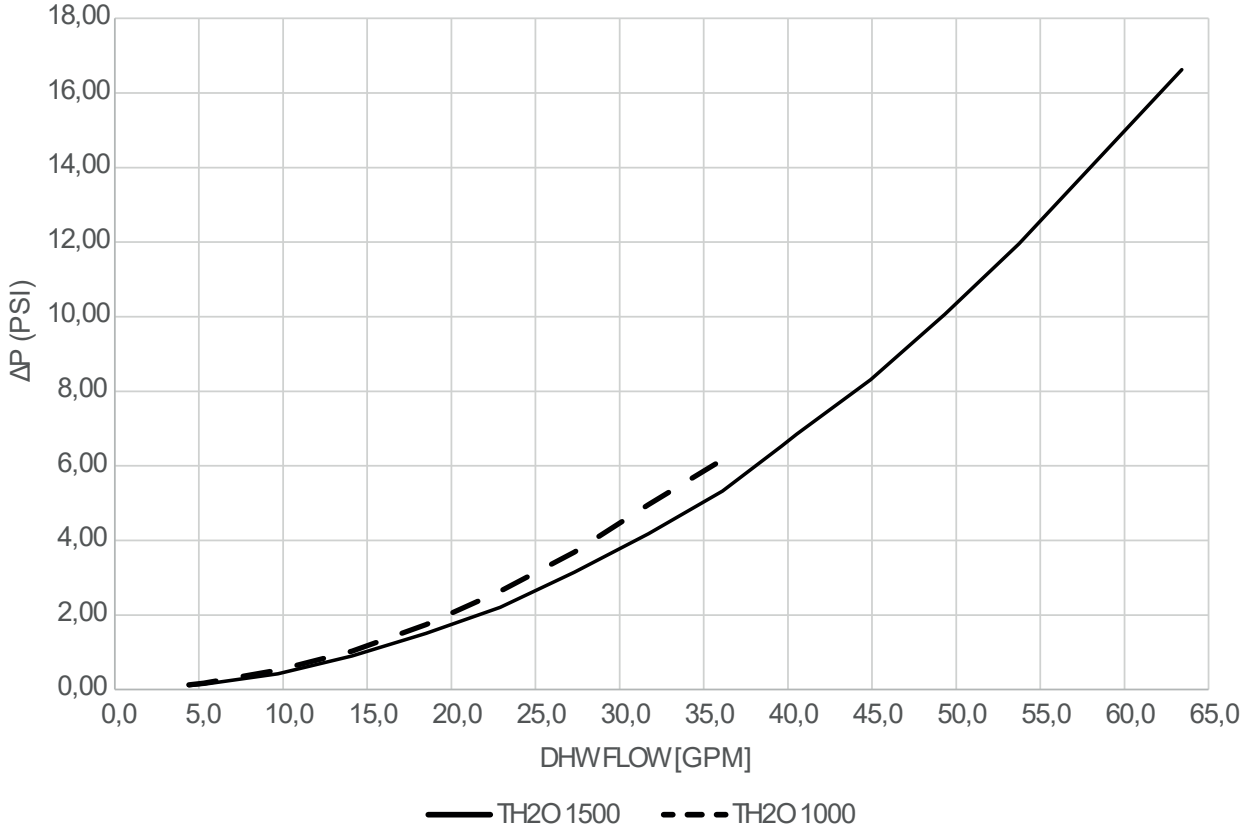

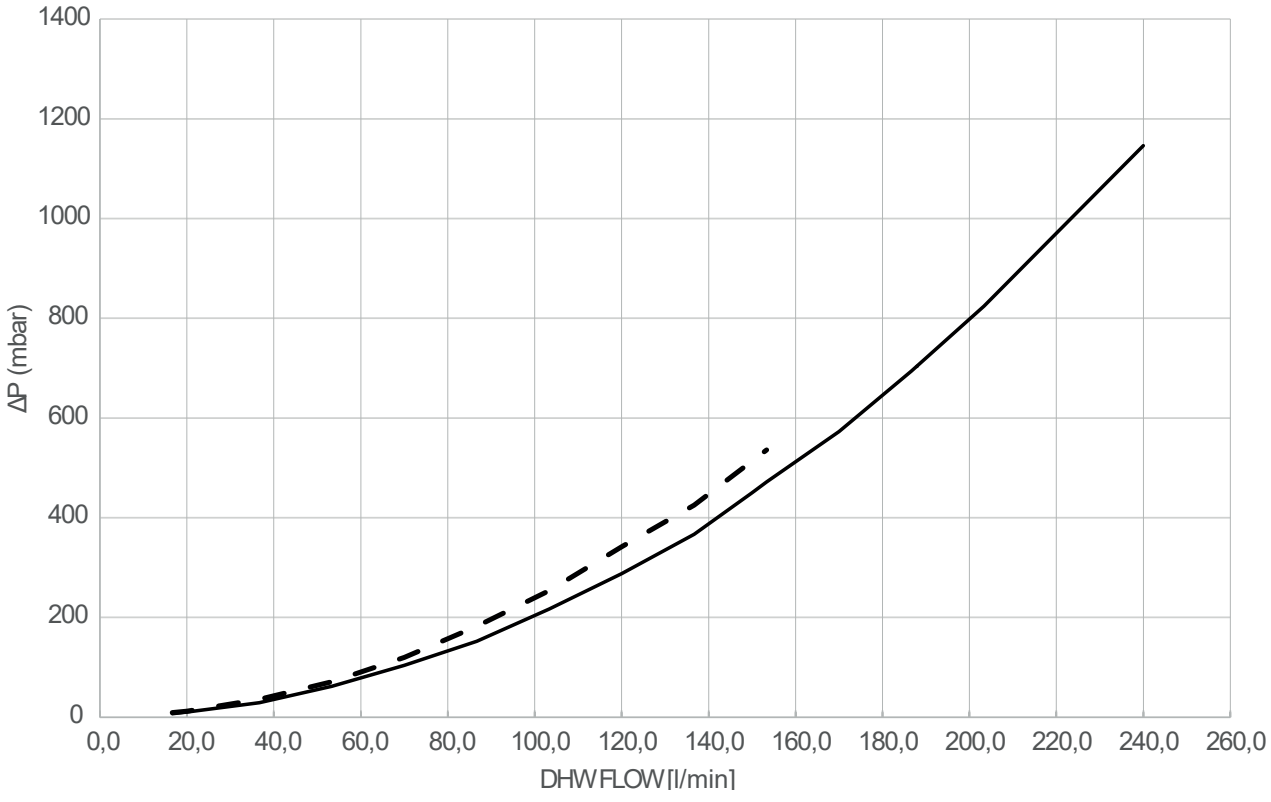

2.8 Structure

ARRAY TH20 1000 – 1500

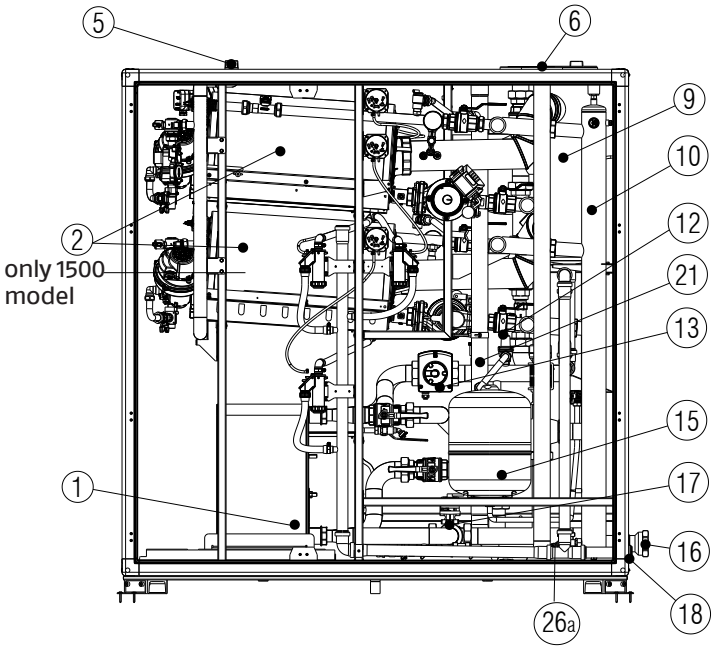

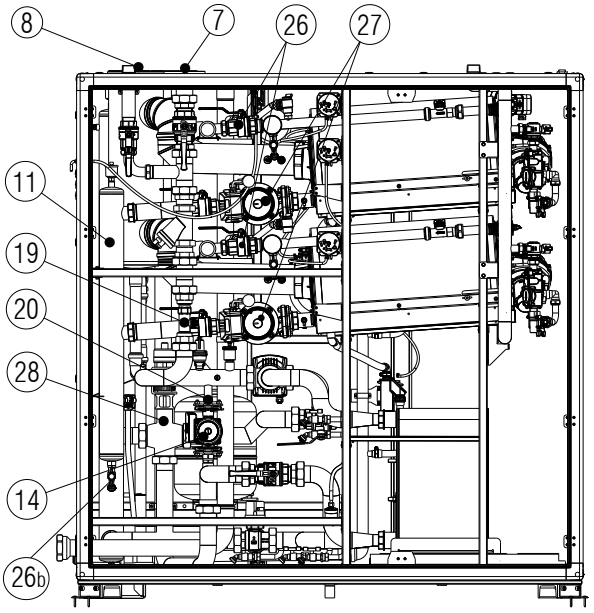

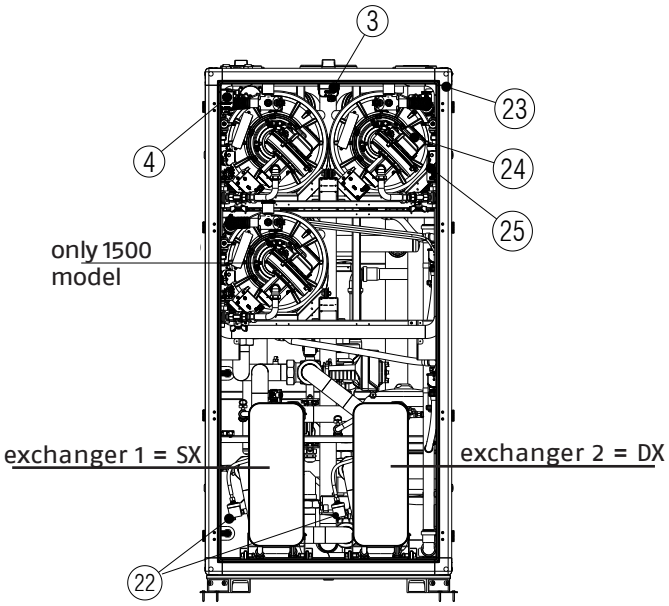

1 DHW Plate heat exchanger
– exchanger 1= SX
–exchanger 2=DX
2 Heat exchanger
3 Pressure switch gas max
4 Pressure switch gas min
5 Gas manifold
6 DHW outlet
7 Domestic cold water inlet
8 DHW circulation
9 Flue gas manifold
10 Water flow manifold (Primary Side)
11 Water return manifold (Primary Side)
12 Relief valve drain DHW
13 DHW diverter valve
14 Internal recirculation pump
15 Expansion tank
16 Relief valve drain pipe
17 Primary diverter valve
18 Condensate drain outlet pipe
19 DHW flowmeter
20 Recirculation pipe
21 DHW safety pressure valve
22 HX Pressure switch
23 Frame
24 Fan and Venturi
25 Gas valve
26 (a – b) Primary filling water tap (see "5.3 Filling the Primary Circuit")
27 Condesate pressostats

2.9 Logical scheme

Cold water enters the boiler and the inlet temperature and flow rate are measured. Subsequently, the cold water mixes with the flow rate recirculated by the internal pump.
This recirculation keeps the water in motion (even in the absence of domestic hot water draw-off by the user), preventing limescale from depositing on the walls of the domestic hot water heat exchanger and contributing to improved regulation of the hot water temperature supplied to the user.
It is possible to stop this pump by setting the parameter that defines the maximum flow rate above which the pump must stop.
A temperature sensor monitors the water temperature after mixing.
A diverter valve directs the domestic water toward the domestic hot water heat exchanger in use.
The plate heat exchanger transfers heat from the boiler primary circuit to the domestic water until the desired setpoint is reached.
Each heat exchanger is equipped with a dedicated temperature sensor to measure the water temperature supplied to the user.
Pressure tapping points for the pressure switches are installed across both plate heat exchangers.
In the absence of domestic water flow, with the internal recirculation pump active, the status of the pressure switch of the heat exchanger in use is checked.
If the pressure losses are excessive, an alarm is triggered indicating the need to clean or replace the heat exchanger and, if automatic exchanger switching is enabled, the boiler will use the second heat exchanger to ensure continuity of domestic hot water generation.
The water in the primary circuit is heated by the combustion units.
The mixing valve regulates the water flow rate and therefore the amount of heat, supplied to the plate heat exchanger.
The diverter valve directs the flow toward the heat exchanger in use.
Thanks to the measurement of the inlet water temperature and flow rate (feed-forward signals), the controller is able to act before changes in domestic hot water demand affect the outlet temperature from the heat exchanger.
The primary circuit setpoint is calculated by adding to the domestic hot water setpoint a temperature differential that depends on the estimated power required to heat the domestic water to the desired temperature.
Below a minimum power threshold, a fixed temperature differential is added, as is the case above a maximum power threshold; between the two power thresholds, the temperature differential is calculated by linear interpolation.
The values of the power thresholds and temperature differentials are specific to each boiler model and can be adjusted via parameters.
Finally, the regulation of the domestic hot water temperature supplied to the user is based on a PID (Proportional-Integral-Derivative) control algorithm, using the temperature reading at the outlet of the heat exchanger and the corresponding adjustment of the mixing valve.
The values of the P, I and D coefficients are specific to each boiler size and can be modified via parameters.

The boiler, through the DHW controller (PLC), manages the burner controller and mix valve to maintain the DHW setpoint.
independently of the DHW Flowrate and DHW input temperature.

The Primary setpoint is calculated based on the power demand from the D side:
- Under 15 KW the primary setpoint is DHW setpoint + 36°F (20°C)
- Over 250 KW the primary setpoint is DHW setpoint + 54°F (30°C)
- In the middle the adjustment setpoint is linear between the two values

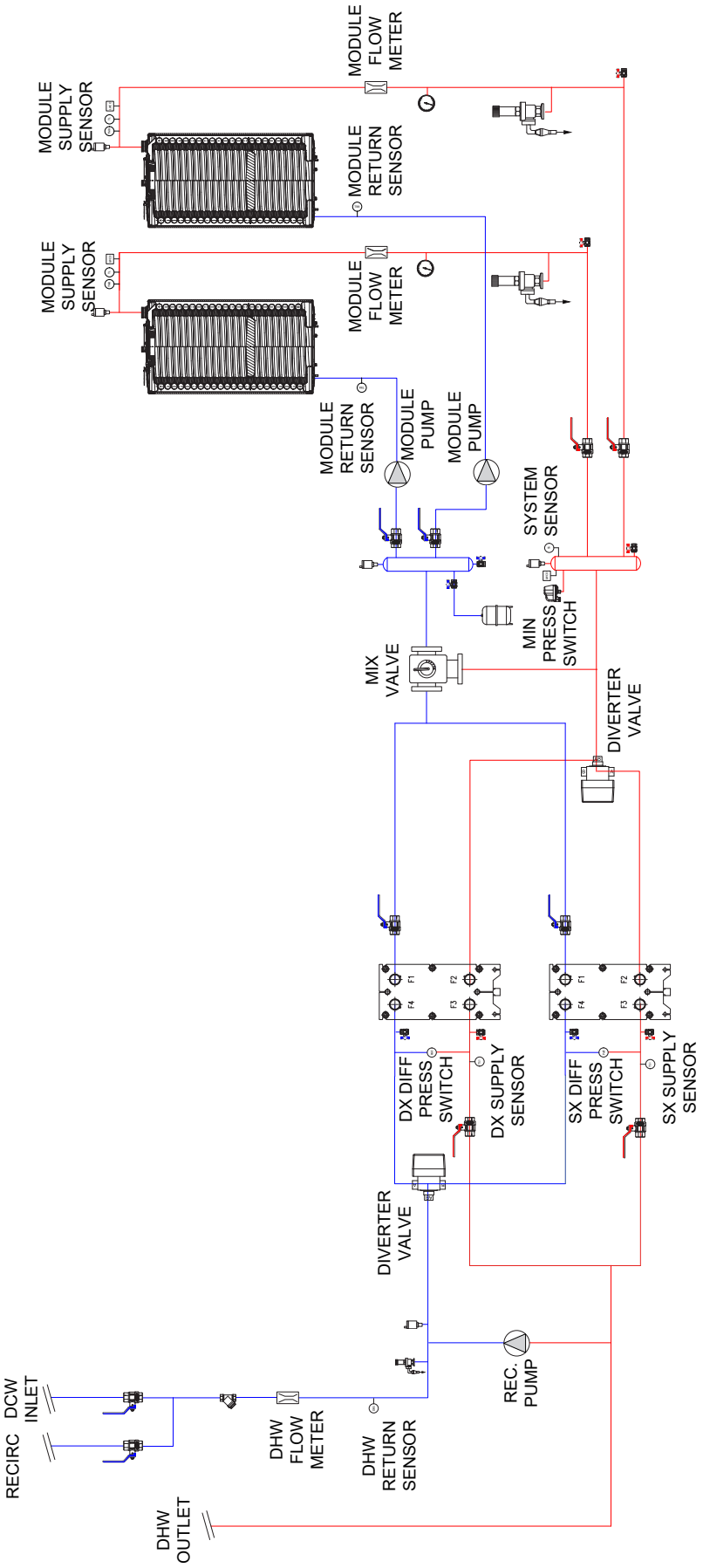

schematic based on TH20 1500 model

3 INSTALLATION

3.1 Introduction

This Chapter provides the descriptions and procedures necessary to unpack, inspect and install the RIELLO **ARRAY TH20** series.

3.2 Receiving the Unit

Each **ARRAY TH20** Series heater is shipped as a single crated unit. The unit must be moved with the proper lifting equipment for safety and to avoid equipment damage. The unit should be completely inspected for evidence of shipping damage and shipment completeness at the time of receipt from the carrier and before the bill of lading is signed.

NOTE: RIELLO is not responsible for lost or damaged freight. Any visual damage to the packaging materials must be reported to the delivering carrier.

Disassembling and re-assembling of the TH20 is not allowed under any circumstance. Any disassembly will void the warranty.

3.3 Unpacking

Carefully unpack the unit, pay particular attention not to damage the unit enclosure when cutting away packaging materials.
After unpacking, a close inspection of the unit should be made to ensure that there is no evidence of damage. The freight carrier should be notified immediately if any damage is detected.

The following components are factory installed on the unit:
- Pressure/Temperature Gauge
- ASME Pressure Relief Valve
- Condensate Drain Traps

3.4 Site Preparation

Ensure that the site selected for installation of the **ARRAY TH20** Instantaneous water heater includes:

- Access to AC Input Power at 120VAC, single phase 60Hz
- Access to Natural Gas line at a recommended setpoint pressure of 8" w.c.
- The instantaneous water heater should be mounted on a concrete service/housekeeping pad 3.5-4" in height.
- The appliance should be located close to a floor drain in an area where leakage from the appliance or connections will not cause damage to the adjacent area or lower floor levels in the building.

3.4.1 Installation Clearances

The **ARRAY TH20** model is packaged in an enclosure having identical footprint but different height.
The unit must be installed with the prescribed clearances for service as shown in Fig. 3.
The minimum clearance dimensions, required by RIELLO, are listed below. However, if Local Building Codes require additional clearances, these codes shall supersede RIELLO's requirements.

Minimum recommended clearances required are as follows:
- **Sides: 24 inches (610 mm)**
- **Front: 31.5 inches (800 mm)**
- **Rear: 24 inches (610 mm)**
- **Top: 24 inches (610 mm)**

All gas piping, water piping and electrical conduit or cable must be arranged so that they do not interfere with the removal of any panels, or inhibit service or maintenance of the unit.

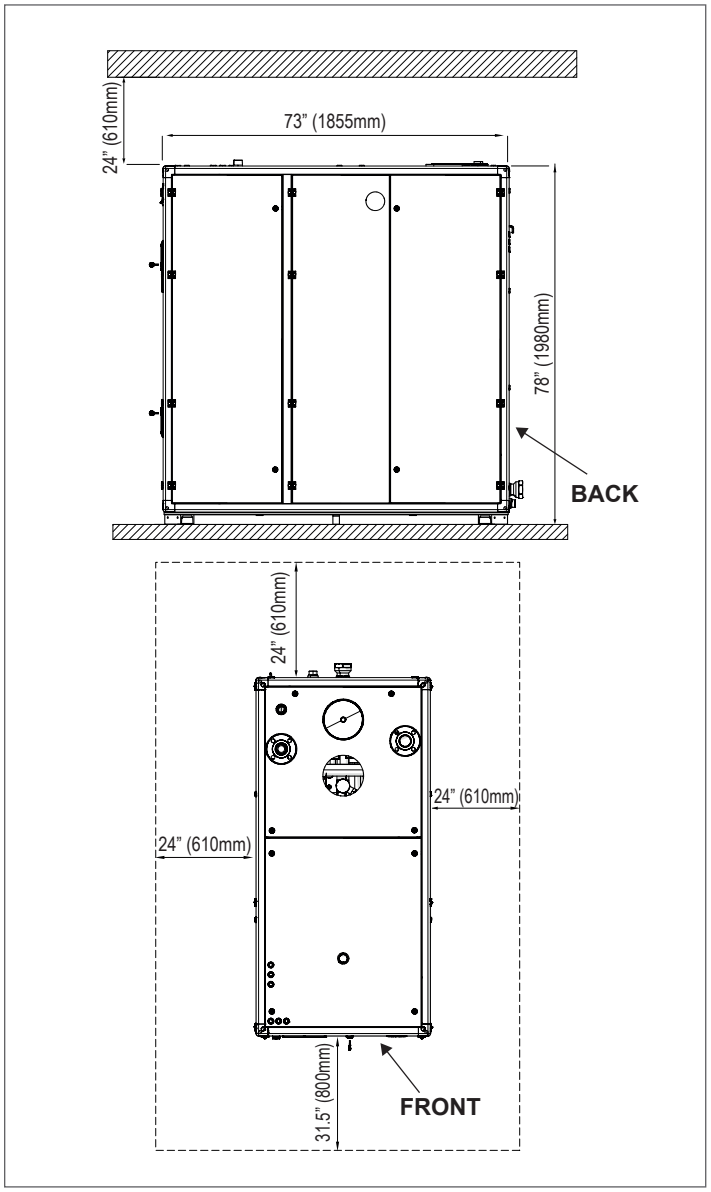

Fig. 3 *Clearances*

WARNING: Keep the unit area clear and free from all combustible materials and flammable vapors or liquids.

CAUTION: While packaged in an enclosure with the same footprint but different height, the unit must be moved by pallet jack or forklift from the SIDE ONLY (see Fig. 3).

FOR MASSACHUSETTS ONLY:
For Massachusetts installations, the unit must be installed by a plumber or gasfitter licensed within the Commonwealth of Massachusetts. In addition, the installation must comply with all requirements specified in "1.1 Warnings & Cautions". See page 5 for additional details.

3.4.2 Setting the Unit

Remove the top and side cardboard panels, the plastic film and the polystyrene sheets. Remove the lag screws securing the unit to the shipping skid. Lift the unit off the shipping skid with a forklift and position it on the floor in the desired location.

WARNING: When lifting or moving the appliance: do not attempt to manipulate the instantaneous water heater using the top water flanges or any other component of the unit.

The instantaneous water heater must be lifted only from the bottom frame.

WARNING: When lifting or moving the appliance with a forklift: make sure the forks are longer than the product size (width or depth) so that the lifting forks stick out as Fig. 4.

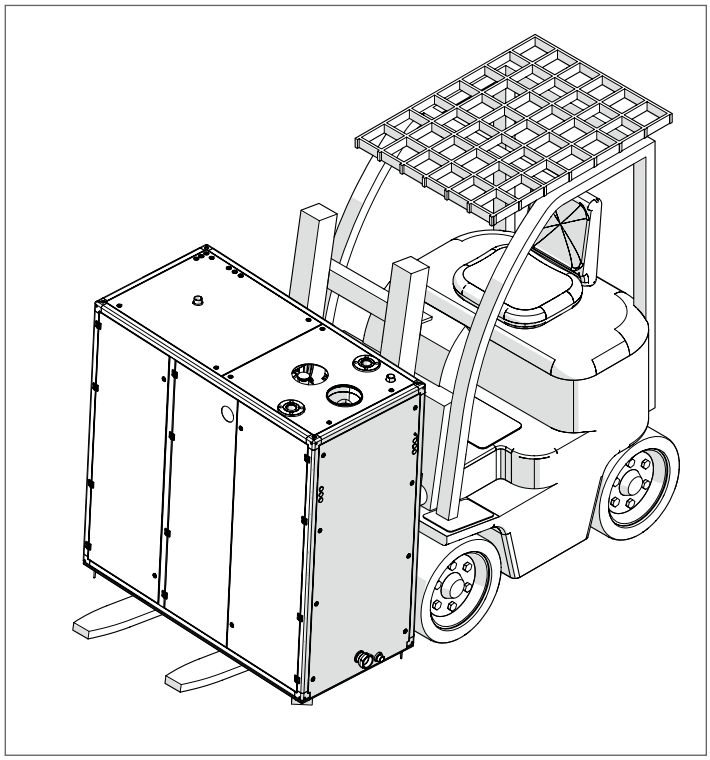

Fig. 4 *ARRAY TH20 Forklift Handling*

If a crane is required, the appliance must be lifted using straps.

WARNING: When lifting the appliance with crane: use bands or straps, no chains. Bands must comply with federal, state and local rules. The bands must be positioned as shown in Fig. 6.

WARNING: When lifting the appliance with crane: the bands must be positioned according to the Fig. 6.

In multiple unit installations, it is important to plan the position of each unit in advance. Sufficient space for piping connections and future service/maintenance requirements must also be taken into consideration. All piping must include ample provisions for expansion.

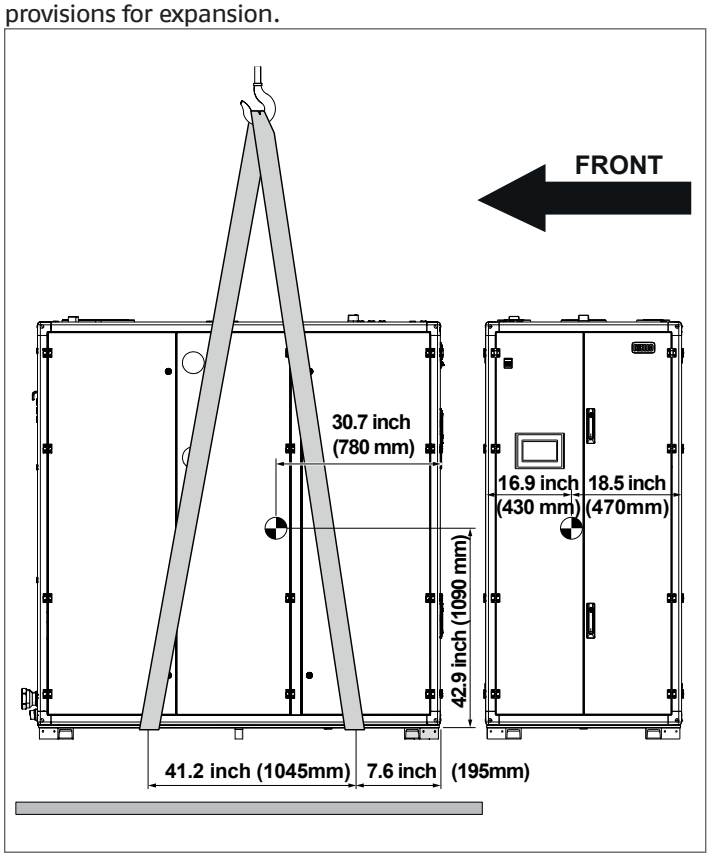

Fig. 5 *Crane Lifting Handling*

The unit must be installed on a concrete service pad (3.5" - 4" height), with no gradient in any direction, to ensure proper condensate and water drainage (see Fig. 6). If anchoring the unit refer to Fig. 9 and Fig. 8 for anchor locations.

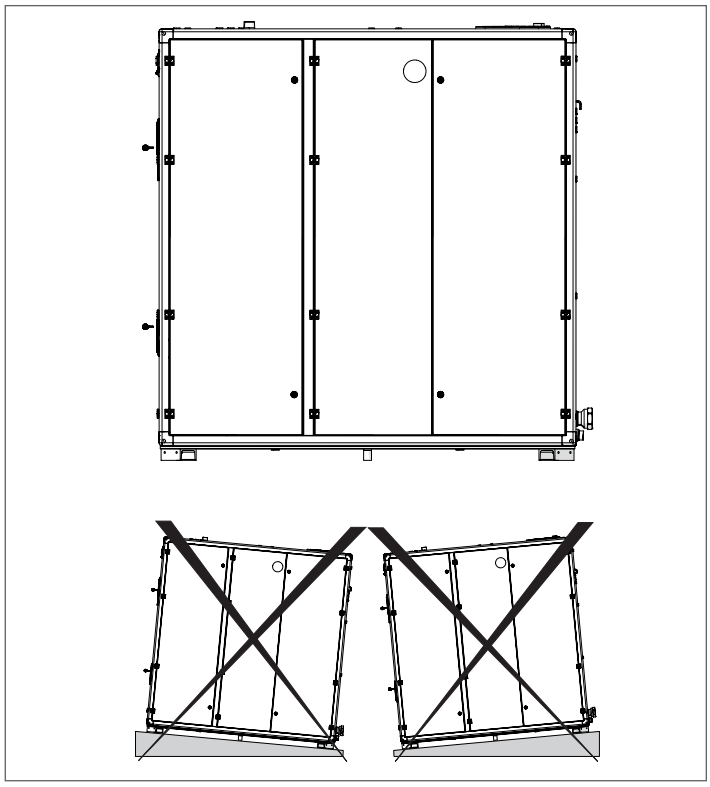

Fig. 6 *Installation*

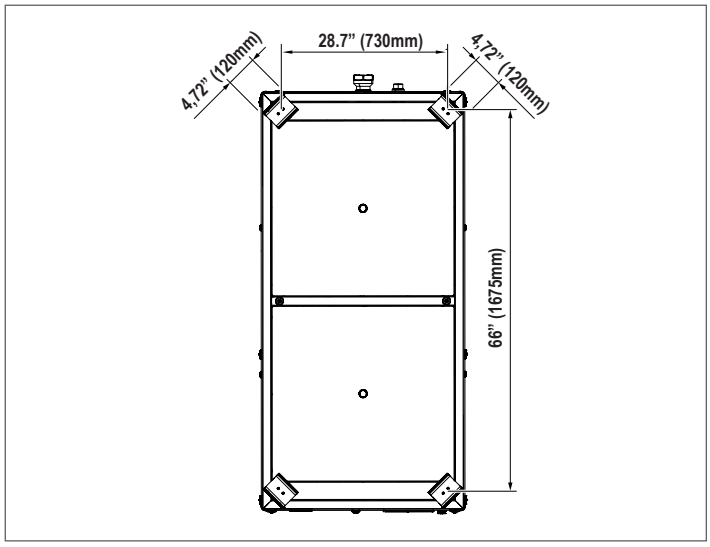

Fig. 7 *Anchoring bolts (view from below)*

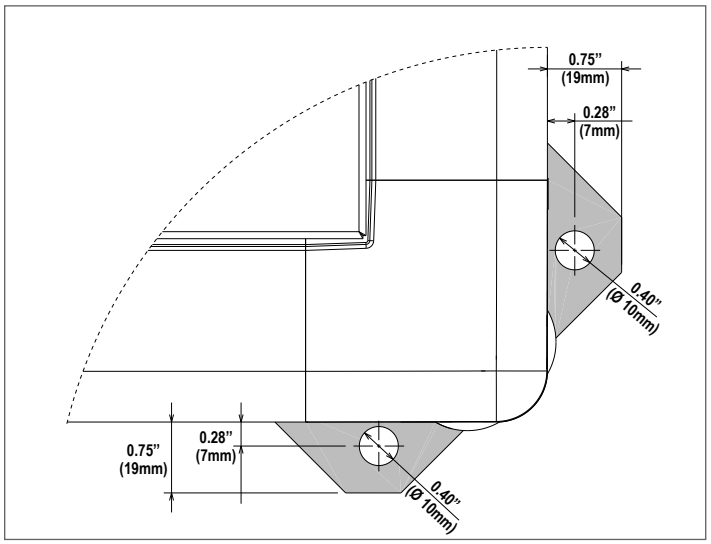

Fig. 8 *Anchoring bolt detail*

3.5 Appliance Location

- This instantaneous water heater is suitable only for indoor installations.
- To operate properly and safely, this instantaneous water heater requires a continuous supply of air for combustion. Install this appliance in a clean, dry location with adequate air supply.
- Do not locate this appliance in an area where it will be subject to freezing.
- The appliance should be located close to a floor drain in an area where leakage from the appliance or connections will not result in damage to the adjacent area or to lower floors in the structure.
- DO NOT install this appliance in any location where gasoline or flammable vapors are likely to be present.
- DO NOT install this appliance on top of carpet or combustible flooring.
- Appliance must be installed on a concrete level service pad (3.5" – 4" minimum recommended height).
- Maintain required clearances from combustible surfaces.

3.6 Water Quality Guidelines Primary side

Excessive water hardness causing a lime buildup in the stainless steel coils or primary tubes is not a fault of the appliance and is not covered by warranty. Water hardness must fall within the following limits:

Parameters	Units	Value
General feature	–	Colorless, no sediment
pH value	PH	Min 6.5; Max 9
Dissolved Oxygen	mg/l	< 0.05
Total iron (Fe)	mg/l	< 0.3
Total copper (Cu)	mg/l	< 0.1
Na_2SO_3	mg/l	< 10
N_2H_4	mg/l	< 3
PO_4	mg/l	< 15
$CaCO_3$	ppm	Min 50 ; Max 150
Trisodium Phosphate	ppm	absent
Chlorine	ppm	< 100
Pressure	PSI	Min 7.25; Max 75

- Use only untreated potable water to fill the system.
- Do not use TSP (tri-sodium phosphate)
- Do not use glycol or other additives
- Do not use fill water treated with salt bedding type exchangers (ion exchanger).
- Consult a local water treatment specialist for recommendations if any of the above table is outside the stated ranges.
- Excessive flow can cause erosion damage to the heat exchanger.

⚠ **CAUTION:** A minimum water pressure is required for optimum performance. Minimum water pressure required: 7.25 psi (0.5 bar).

3.7 Piping

The **ARRAY TH20** series utilizes 2" Class 150 in accordance with ASME B16.5 for all models for the DHW system supply and inlet piping connections. The physical location of the piping connections are on the top of the unit as shown in Fig. 9.

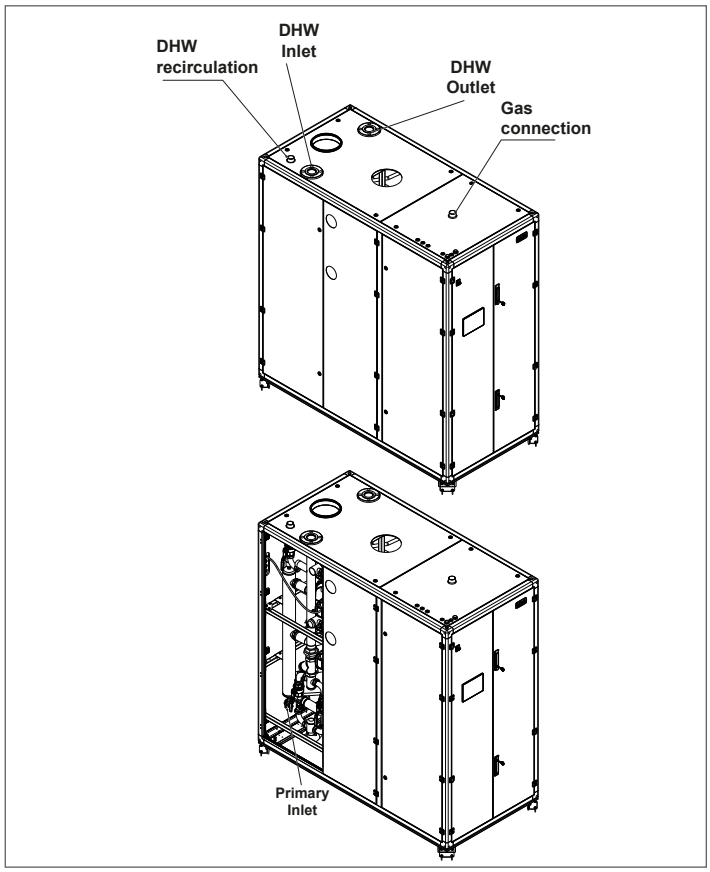

Fig. 9 *Piping connection*

⚠ **CAUTION:** Do not use cleaning fluids that are not compatible with the instantaneous water heaters materials, including acids (e.g, hydrochloric acid and/or similar ones) at any concentration.

⚠ **CAUTION:** Introducing fresh water to the system increases the oxygen presence and can cause corrosion of metallic components. Immediately repair any drips or leaks in the system to avoid constant introduction of air into the system.

⚠ **CAUTION:** Excessive fluctuation in pressure changes in the system can cause fatigue and stress on the heat exchanger. This is detrimental to the integrity of the appliance and system components. It is mandatory to maintain a constant operating pressure.

A minimum water pressure is required for optimum performance in the primary circuit.
Minimum water pressure required in the primary circuit: 7.25 psi (0.5 bar).

3.8 Safety devices

3.8.1 Low Water Cutoff

Low-water protection is installed at two levels:
- boiler level
- heat exchanger level

Boiler level:
a Low Water Cut Off (LWCO) sensor is installed on top of the supply header of each boiler. To check its functionality, go to the HMI touchscreen, access the Boiler screen, push LWCO TEST button and confirm. The error message "33 LWCO/Air inlet block" will appear on the screen.
At this point press the Reset button on the touchscreen. The error will turn off.

Module level:
a Low Water Cut Off (LWCO) sensor is installed on top of the supply fitting of each heat exchanger. To check its functionality, go to the HMI touchscreen, access the Module screen, push MODULE TEST, then LWCO TEST button and confirm. The error message "LWCO2 error" will appear on the screen.
At this point press the Reset button on the page "Boiler screen" of the touch screen. The error will turn off.

3.8.2 High Limit Safety Switch

A high limit safety switch is installed on each heat exchanger of the instantaneous water heater. To simulate a high limit lockout at 215°F (102 °C) go to the relevant Module screen, press 'Module Test', then 'High Limit Test' button.

The control will display "MN: Max. Thermostat Lock Error".

At this point press the reset button on the page "Boiler screen" of the touch screen to restart the module.

3.8.3 Pressure Relief Valve Installation

ASME rated Pressure Relief Valves are factory installed in each **ARRAY TH20** series. The standard pressure rating for the relief valves is 75 PSI. The relief valves are installed on each hot water horizontal manifold of the primary side of the appliance as shown in Fig. 10. The relief valves' drain piping are connected to a nearby floor drain.
The common relief drain should be connected to a suitable discharge location. Relief valves should be manually operated at least once a year. If a relief valve discharges periodically, this may be due to thermal expansion in a closed water supply system.
Contact the water supplier or local plumbing inspector on how to correct this situation.

On the DHW side there is another relief valve set at 150 PSI, to prevent hazardous situations.

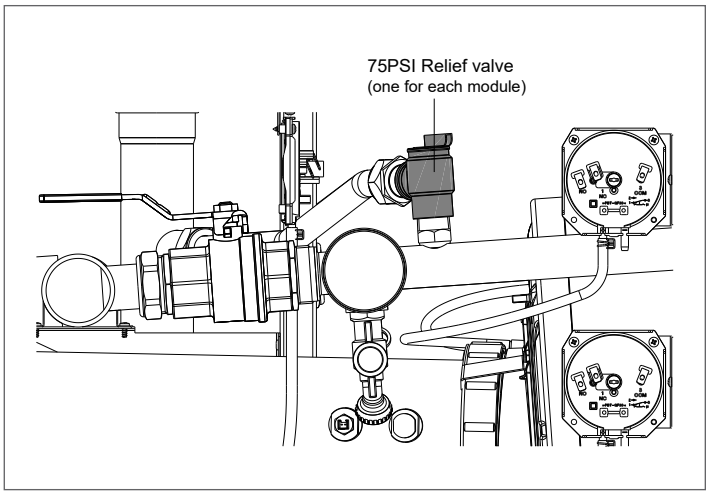

Fig. 10 *Pressure Relief Valve Location*

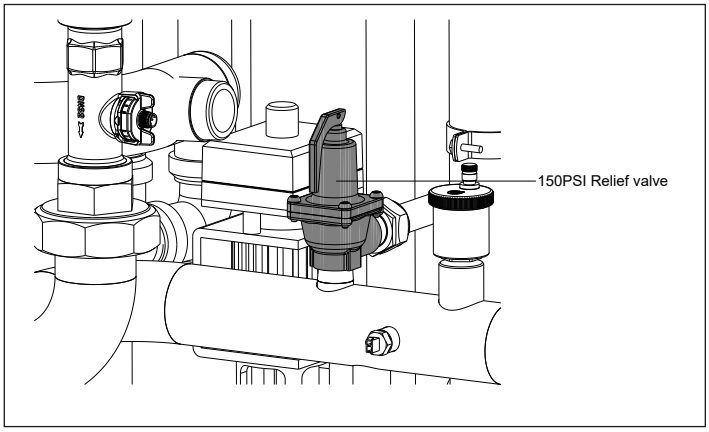

Fig. 11 *DHW Pressure Relief Valve Location*

3.8.4 Condensate Drain and Piping

The **ARRAY TH20** series is designed to condense water vapor from the flue products. Each heat exchanger of the appliance is equipped with a condensate trap, while a siphon collects the condensate of the vertical flue manifold.

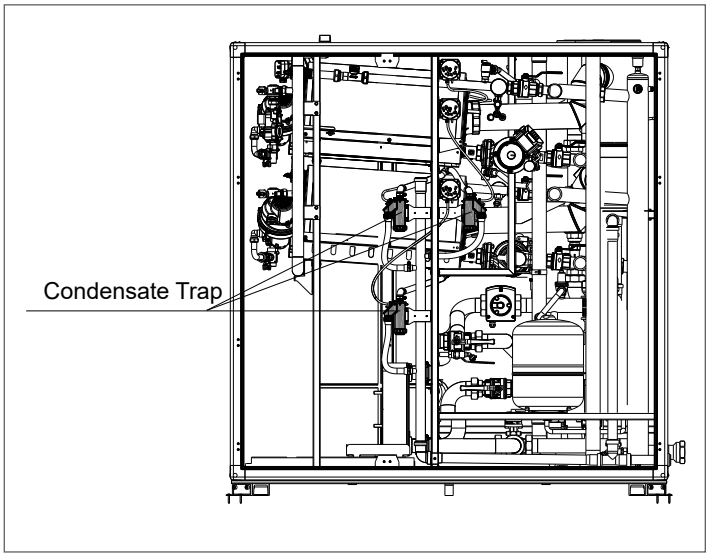

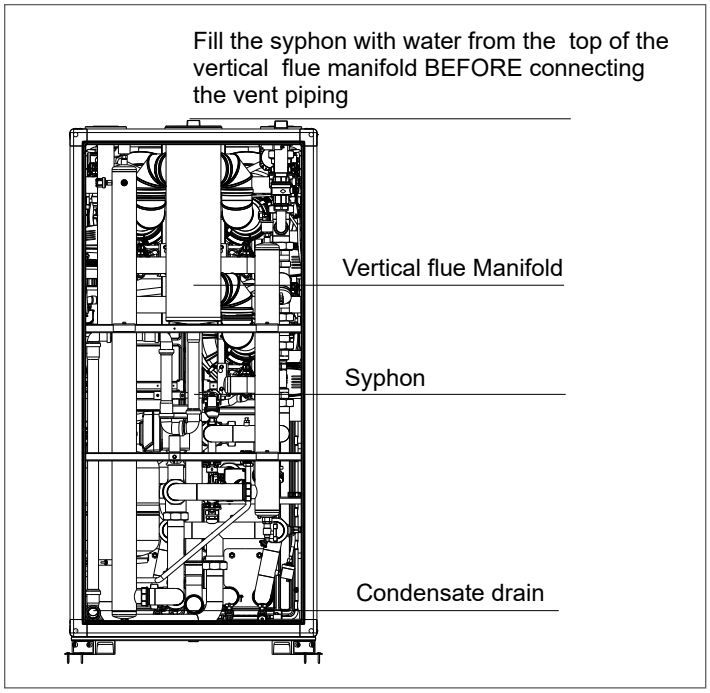

Fig. 12 *Condensate Drain System*

⚠ **WARNING:** At the Startup and after prolonged shutdown of the appliance, the condensate traps and the siphon must be filled with water prior to restarting it, otherwise combustion gases may enter the room with a risk of an excessive level of carbon monoxide.

- The installation must have provisions for suitable drainage or collection of the condensate exiting the appliance traps.
- The condensate water shall be discharged at atmospheric pressure, by dripping into a suitable drain and shall be neutralized prior to draining per local/national codes.
- The condensate drain tube must pitch away from the appliance (1/4" slope per foot) and must never reduce its diameter downstream.
- Never use copper pipes or other material not intended for the specific purpose, because the acidic nature of the condensate will cause a rapid deterioration of the unsuitable piping and/or exposed components.
- Check that the condensate drain pipe is adequately sloping towards the discharge point avoiding high points, which can inhibit the flow of the condensate. The condensate pipe must be installed in such a way so as to avoid the freezing of any liquid.

⚠ **WARNING:** Verify condensate disposal/neutralization is in accordance with local, state and federal regulations.

If a floor drain is not available, a condensate pump can be used to remove the condensate to an alternate drain. The maximum condensate flow rate is 6.3 GPH for **ARRAY TH20**. The drain line must be removable for routine maintenance.

⚠ **CAUTION:** Use PVC, CPVC, stainless steel or polypropylene for condensate drain piping. DO NOT use carbon steel or copper components.

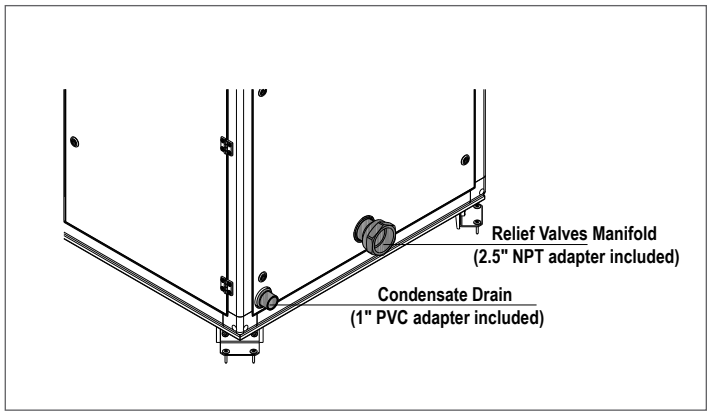

Fig. 13 *Condensate Drain and Relief Valves Manifold Locations*

The recommended procedure for **filling the siphon** at the bottom of the vertical flue manifold before the startup or after a prolonged shutdown is described below:

- Before connecting the external exhaust venting to the appliance, access the top panel, remove the protective cap from the flue exit and pour water into it.
- Keep filling the siphon (at least 8 oz, of water are required) until some water starts flowing from the condensate drain exit.

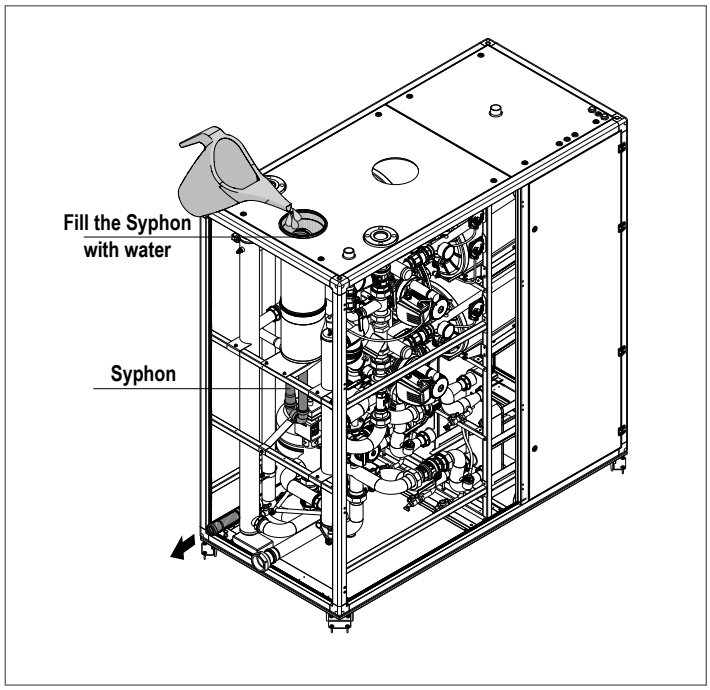

Fig. 14 *Filling the siphon*

3.9 Gas Supply Piping

ARRAY TH20 contains a 1.5 inch NPT gas inlet connection on the top of the unit as shown in Fig. 9.

WARNING: Never use matches, candles, flames or other sources of ignition to check for gas leaks.

CAUTION: Many of the soaps used for gas pipe bubble-leak testing are corrosive to metals. Therefore, piping must be rinsed thoroughly with clean water after leak checks have been completed.

NOTE: All gas piping must be arranged so that it does not interfere with the removal of any covers, inhibit service and/or maintenance, or restrict access between the unit and walls, or another unit.

- Prior to installation, all pipes should be de-burred and internally cleared of any scale, metal chips, oil, water or other foreign particles. Do not install any flexible connectors or unapproved gas fittings. Piping must be supported only from the floor, ceiling or walls and must not be supported by the unit.
- A suitable piping compound, approved for use with natural gas, should be used. Any excess must be wiped off to prevent clogging of components.
- To avoid unit damage when pressure testing gas piping, isolate the unit from the gas supply piping. At no time should the gas pressure applied to the unit exceed 13.5" w.c/34mbar. Leak test all external piping thoroughly using a soap and water solution or suitable equivalent. The gas piping used must meet all applicable codes.
- A sediment trap/drip leg must be installed on the gas supply piping.
- Installation of a union fitting at the appliance gas line connection is required for ease of service.

An external gas pressure regulator is required on the gas inlet piping under most conditions. The use of a lever-acting positive lock-up type regulator with over-pressure protection is recommended. Regulators must conform to the following specifications:

- The external natural gas regulator must be capable of regulating
  a) 50.000 - 1.000.000 Btu/hr for **TH20 1000**
  a) 50.000 - 1.500.000 Btu/hr for **TH20 1500**
- The desired pressure setpoint should be 8.0" w.c for natural gas.
- A regulator MUST be used when gas supply pressure will exceed 13.5" w.c.
- The line pressure shall be regulated to guarantee the pressure is not be lower than 4" w.c. (both static and dynamic pressure).

The following are RIELLO's recommendations for installation of gas pressure regulator, unless superseded by state and local codes and the regulator manufacturer's specifications:

- Horizontal installation of gas pressure regulators is recommended unless stated otherwise by the regulator manufacturer. Consult the manufacturer for additional recommendations and installation options.
- For all ARRAY TH20 series, when installed horizontally the recommended distance between the gas pressure regulator and the appliance is ten feet. A minimum of ten pipe diameters of straight pipe must be maintained between the regulator and any pipe fitting, elbow, reducer, valve, etc.
- When pipe size reduction is required, use only bell reducers.

MASSACHUSETTS INSTALLATIONS ONLY

For Massachusetts installations, a mandatory external gas supply regulator MUST be installed. The gas supply regulator must be properly vented to outdoors. Consult the local gas utility for detailed requirements concerning venting of the supply gas regulator.
The Commonwealth of Massachusetts prohibits the use of copper tubing for the gas line.

NOTE: It is the responsibility of the customer to source, purchase and install the appropriate gas regulator as described above.

3.9.1 Gas Supply Specifications

The gas supply input specifications to the unit for Natural Gas are as follows:

- The maximum pressure to the unit must not exceed 13.5" w.c./34 mbar.
- The gas supply piping and pressure to the unit must be of sufficient capacity to provide 1010 CFH for **TH20 1000.** 1515 CFH for **TH20 1500** , while maintaining the recommended minimum gas pressure at 8" w.c. for burners operating at maximum capacity.
- Gas static pressure with all modules/unit at maximum power.
- Dynamic pressure should never be less than 4" w.c

3.9.2 Manual Gas Shutoff Valve

A manual shut-off valve must be installed in the gas supply line upstream of the appliance. Maximum allowable gas pressure to the appliance is 13.5"w.c/34 mbar.

3.9.3 Adjusting and Setting 0_2 Limits

- Insert a combustion analyzer probe into the test port shown in Fig. 15;
- Go to the Touchscreen and access the Module screen (as described on "5.12 Boiler Screen") relevant to the module under analysis;
- Press "MODULE TEST" button;
- Press "HIGH POWER" button.

Wait 2 or 3 minutes to reach steady state conditions and record the 0_2 value.

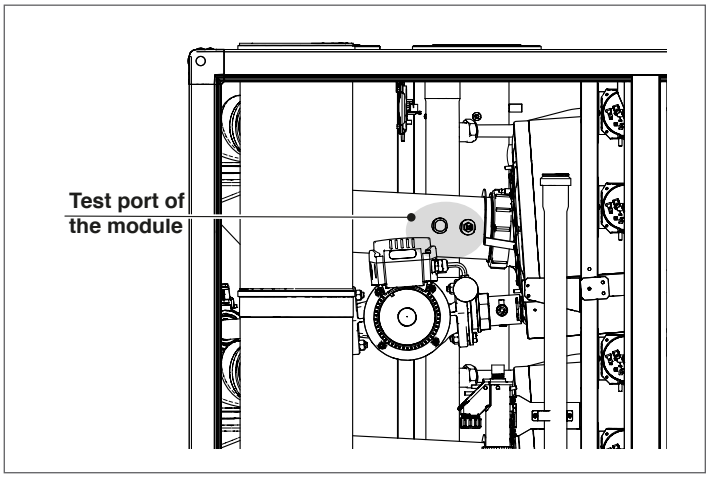

Fig. 15 *Test Port for Combustion Analysis (available on each individual heat exchanger)*

To adjust the 0_2 value at high-fire turn the screw "A" (rotate counterclockWise to decrease 0_2) shown in Fig. 16. An allen type wrench is necessary for this adjustment.
Verify that the value of 0_2 is stable and within the range indicated in the following table (be careful to make small changes and confirm that the value is stable before making additional adjustment).

Press "LOW POWER": the fan will run at the minimum speed.

To adjust the 0_2 value at the minimum input, turn the screw "B" (rotate clockWise to decrease 0_2) shown in Fig. 16.
Verify that the value of 0_2 is stable and within the range indicated in the following table (be careful to make small changes and confirm that the value is stable before making additional adjustment).
Press "Reset" and the appliance returns to the "stand by" mode.
Press "Reset" to return the appliance to standby mode.
Repeat above process for all heat exchangers.

ARRAY TH20 Combustion Values		
Gas Type	**Max. Fire 0_2%**	**Min. Fire 0_2%**
Natural Gas	4.2 – 5.8	4.2 – 5.8

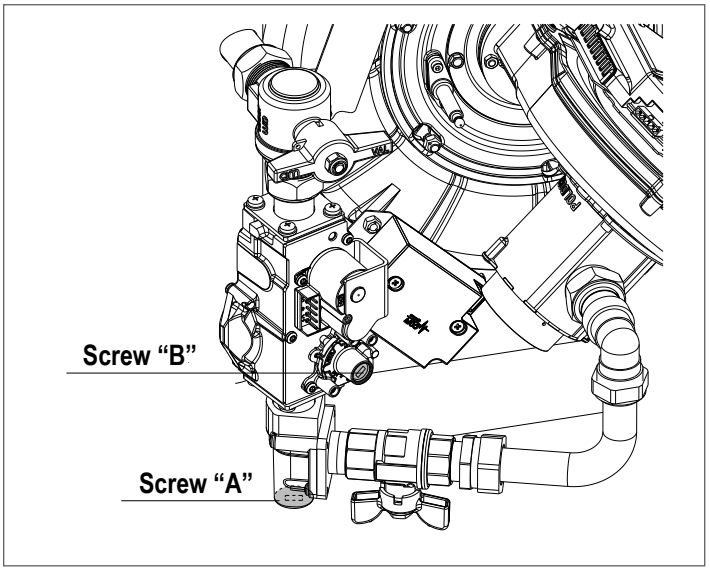

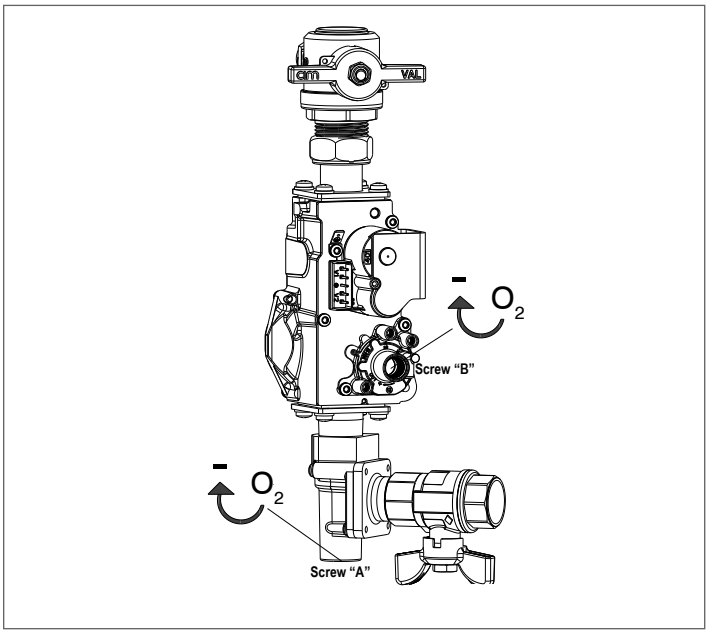

Fig. 16 *0_2 Adjustment*

3.10 AC Electrical Power Wiring

External AC power is connected to the unit inside the electrical box, located on the inside of the front door. Open the front door and remove the panel mounted in the upper part of the left front door of the unit as shown in Fig. 17 and Fig. 27.

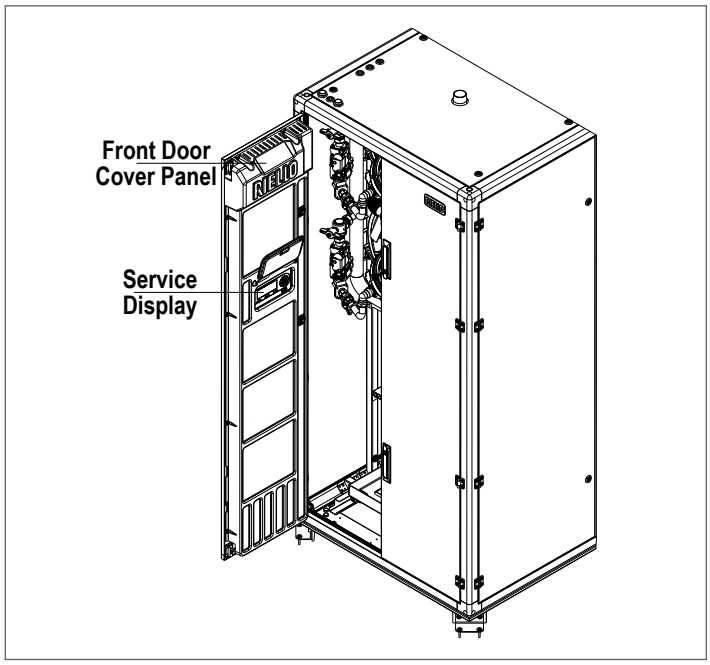

Fig. 17 *Front Door Internal Layout*

Loosen the screws of the Electrical box cover and remove panel to access the internal connections shown in Fig. 18.

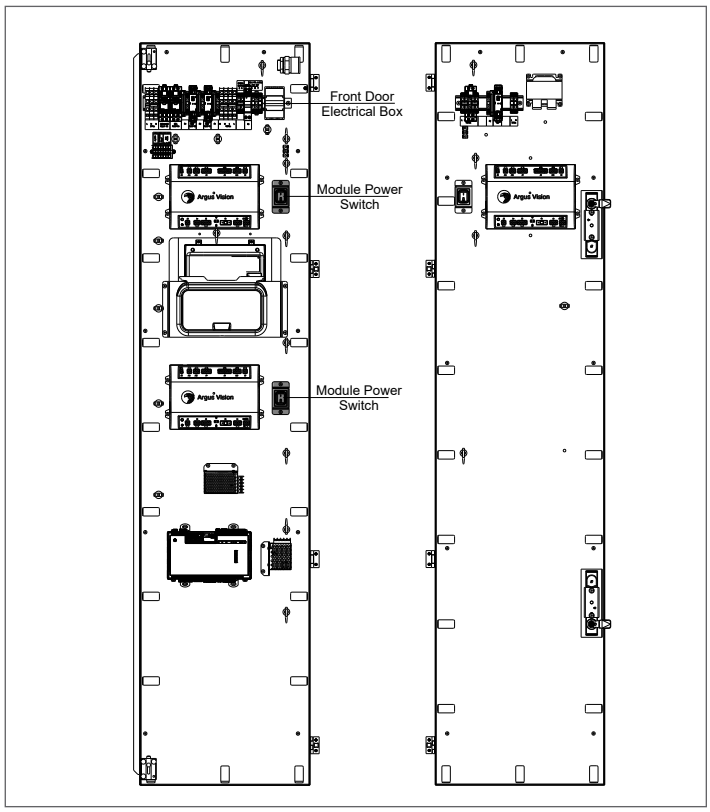

Fig. 18 *Front Door Electrical box*

All of the components in the Electrical box are mounted on a DIN rail.

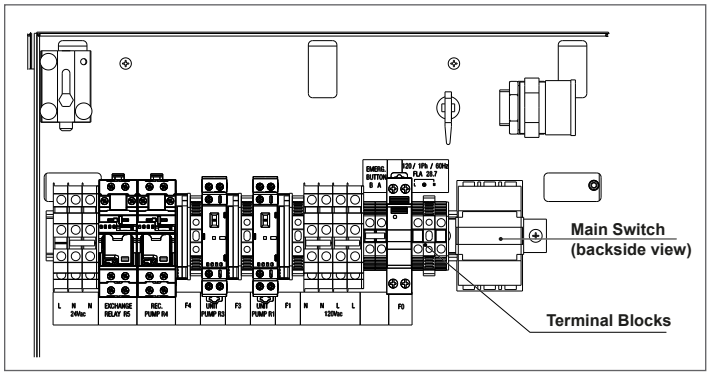

Fig. 19 *Front Door Electrical components*

WARNING: The main switch shown in Fig. 19 and Fig. 20 does not remove power from the left door terminal blocks.

NOTE: All electrical conduit and hardware must be installed so that it does not interfere with the removal of any unit covers, inhibit service/maintenance, or prevent access between the unit and walls or another unit.

3.10.1 Electrical Power Requirements

The voltage configuration of **ARRAY TH20** is: 120VAC. 1Ph. 60Hz.

NO OTHER DEVICES SHOULD BE ON THE SAME ELECTRICAL CIRCUIT AS THE INSTANTANEOUS WATER HEATER.
The Main Circuit two-pole switch is accessible on the front door to quickly and safely disconnect electrical service. This breaker does not remove power on the incoming power supply terminals.
The field power line wires shall be appropriately sized to carry the full load of the appliance without Problems/Damage.

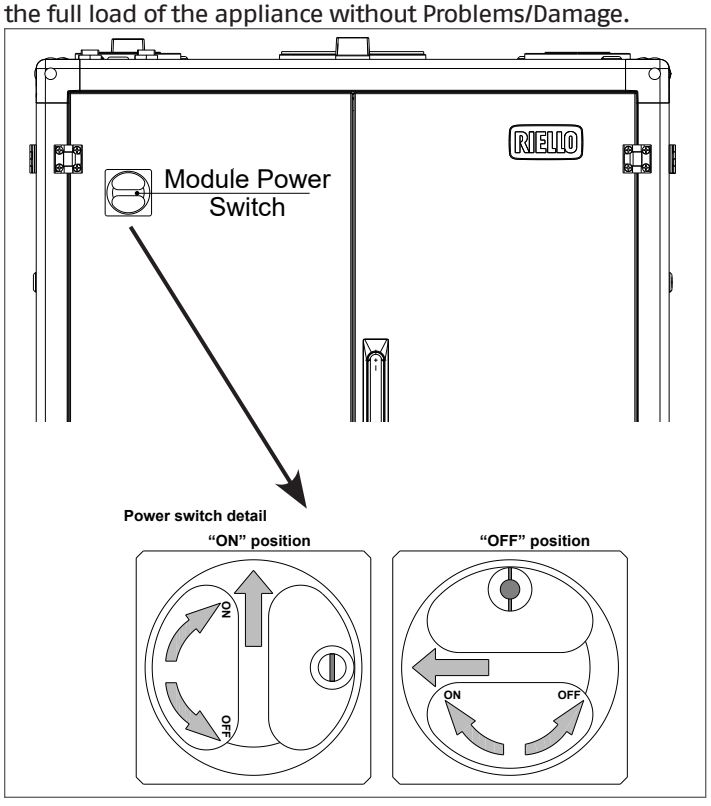

Fig. 20 *Main switch*

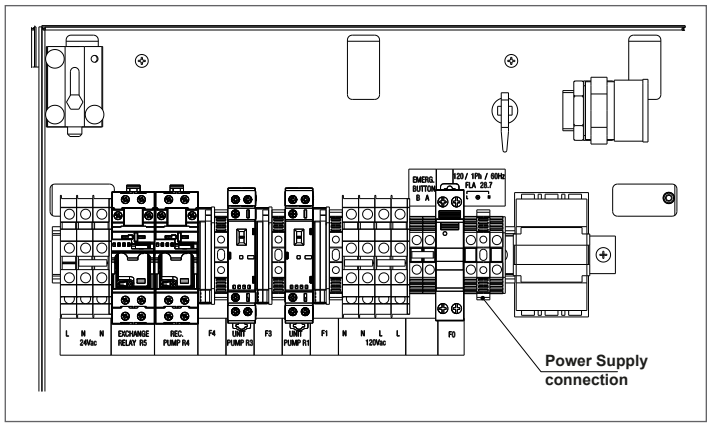

Fig. 21 *ARRAY TH20 Power supply connection*

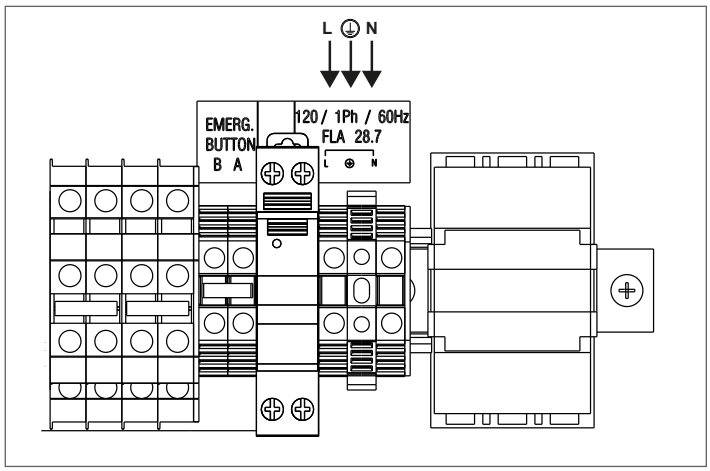

Fig. 22 *ARRAY TH20 120VAC Power supply connection*

The installed appliance must be electrically bonded to ground in accordance with the requirements of the authority having jurisdiction. In the absence of such requirements, the installation shall conform to National Electrical Code (NEC), ANSI/ NFPA 70 and/or the Canadian Electrical Code (CEC) Part I. CSA C22.1 Electrical Code.

3.10.2 Emergency Button

The appliance is designed for connection to an external emergency button.
To use it, the "yellow" jumper must be removed.

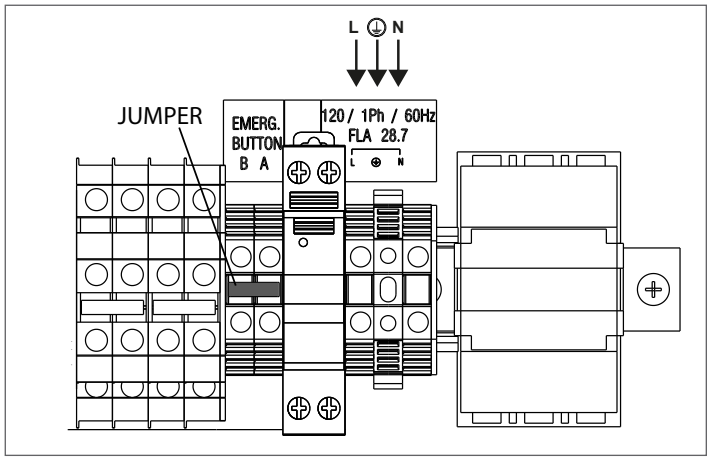

Fig. 23 *Yellow jumper position*

It is recommended to follow the scheme below using an external relay (not supplied).

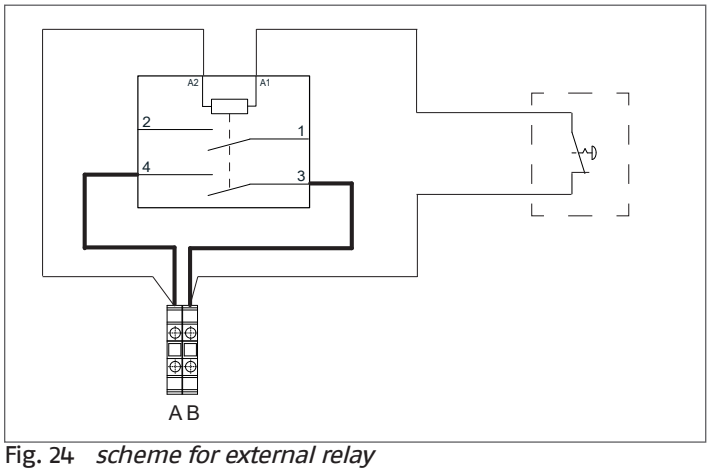

Fig. 24 *scheme for external relay*

3.11 Field Control Wiring

Each unit is fully wired from the factory with an internal operating control system. No field control wiring is required for normal operation.
However, the control system used with all **ARRAY TH20** series does allow for some additional control and monitoring features. Wiring connections for these features are made on the Input/ Output (I/O) terminal strips located behind the removable cover on the inner side of the front door of the unit, as shown in Fig. 25.

NOTE: Any electrical load connected to the terminal strip (Alarm, External Rec. Pump) must be powered through a relay, not included in the appliance, to be provided and wired by the installer.

NOTE: The Output signals are 24VAC can carry a maximum current 0.5A/ each.

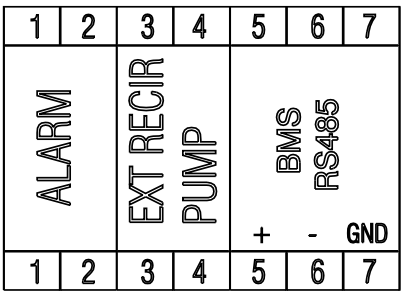

Fig. 25 *I/O Terminal Strips*

All field wiring is installed from the rear of the panel by routing the wires through one of the openings provided on the sides of the cover panel (see Fig. 26).

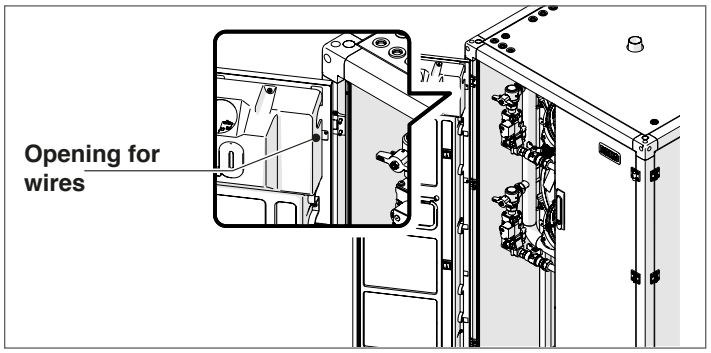

Fig. 26 *Opening on the Cover Panel*

4 CONNECTIVITY

4.1 Bacnet IP connection

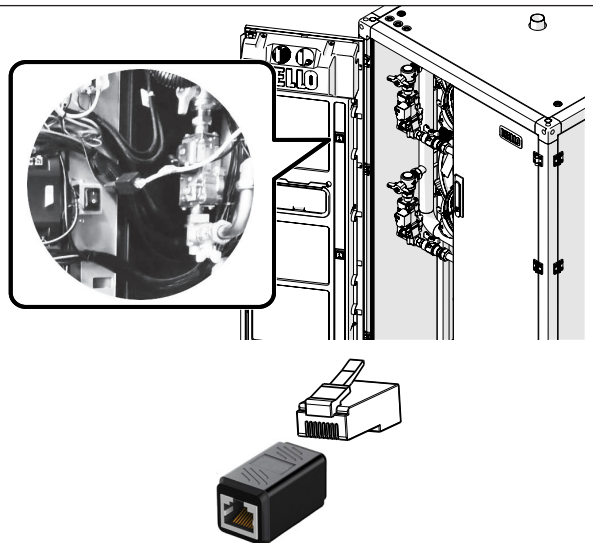

side for the
User connection

⚠ BACnet® is a registered trademark of ASHRAE.

⚠ The use of the BACnet® logo in this document complies with ASHRAE's guidelines and does not imply any endorsement, certification, or warranty by ASHRAE.

⚠ The BACnet/IP pinout follows the standard for RJ45 pinout.

PinRJ45	Color in the wiring diagram	Ethernet function
1	Brown	TX + (Transmission +)
2	Blue	TX – (Transmission –)
3	Yellow	RX + (Reception +)
4	Green	Not used
5	Red	Not used
6	Black	RX – (Reception –)
7	White/Orange	Not used
8	Grey	Not used

Default configuration device
IP Address : 192.168.1.103
Subnet Mask: 255.255.255.248
Gateway: 169.168.1.1
Device ID: discover from the webpage

Name	Reference Name	Type	Object Name	Address	Access	Property
DHW setpoint	setpoint	(AV)	setpoint_1	5034	R/W	relinquish_default
DHW_ON_OFF	dhw_on_off	(AV)	dhw_on_off_1	5019	R/W	present_value*
Actual Status	actual_status	(AV)	actual_status_1	32	R	present_value
Alarm Status	alarm_status	(AV)	alarm_status_1	33	R	present_value
Boiler error (Main)	boiler_error_01	(AV)	boiler_error_01_1	4	R	present_value
Boiler error (Dep1)	boiler_error_02	(AV)	boiler_error_02_1	2	R	present_value
Boiler error (Dep2)	boiler_error_03	(AV)	boiler_error_03_1	3	R	present_value
DHWoutDX Temp	t_dhwoutdx	(AV)	t_dhwoutdx_1	7	R	present_value
DHWoutSX Temp	t_dhwoutsx	(AV)	t_dhwoutsx_1	8	R	present_value
DHWret Temp	t_dhwret	(AV)	t_dhwret_1	9	R	present_value
Boiler Power%	boiler_power	(AV)	boiler_power_1	5	R	present_value
Total Flow	tot_flow	(AV)	tot_flow_1	23	R	present_value
Hx change	bo_hxchange_01	(BO)	bo_hxchange_01_1	3	R	present_value
*Release of the property to allow control via touchscreen						

4.1.1 Change the PLC IP address

Use USB A PLUG – USB A PLUG cable – connect between PLC Service port and laptop.
Open the browser and enter the default IP address 169.254.1.1 to change the IP address refer to the following screens procedure.

```
12/15/2025  11:51:10         CM: 2

Last data backup : 12/15/2025  05:36:45
Last data restore : 06/06/2025  14:18:24

Model Name: SS-683TX
Device Instance: 0241301

Driver built: 09/19/23-09:10  68859

Downloaded by: WebCTRL Cloud Server 12/15/25 10:36 Riello_Lecco - B/SC 0

Application Software Version: PRG:th2o_prod01

Data Partition Version: None

1 PRGs initialized.  1 PRGs running.

Controller status:
==========================================
Driver version 107.06.2065 information:
  drv_fwex v107.06:2065  Sep 19 2023
  fwex_107.06.2065_all
  io-server_107.06.2061_all
  io-modules_107.06.2061_all
  kerndriver_107.06.2061_all
  recoveryfiles_107.06.2061_all
  localaccess_107.06.2061_all
  webcontent_107.06.2061_all
  webframework_107.06.2061_all
  webserver_107.06.2061_all
```

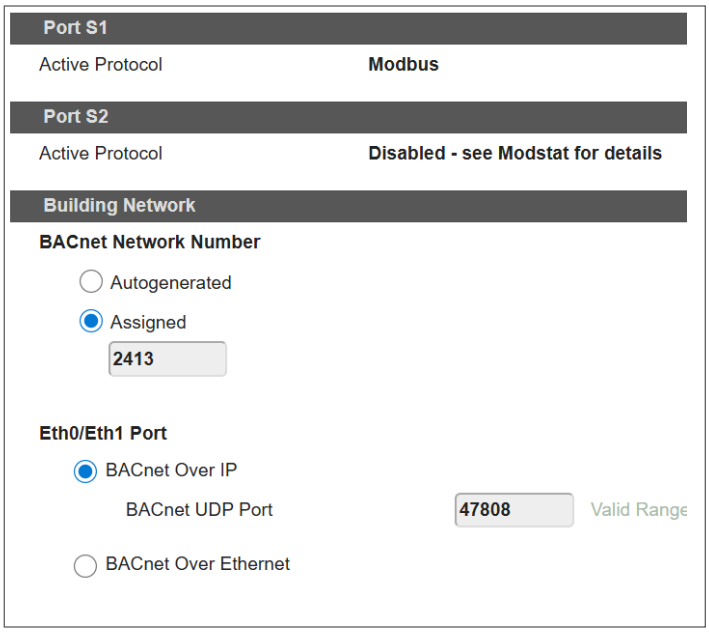

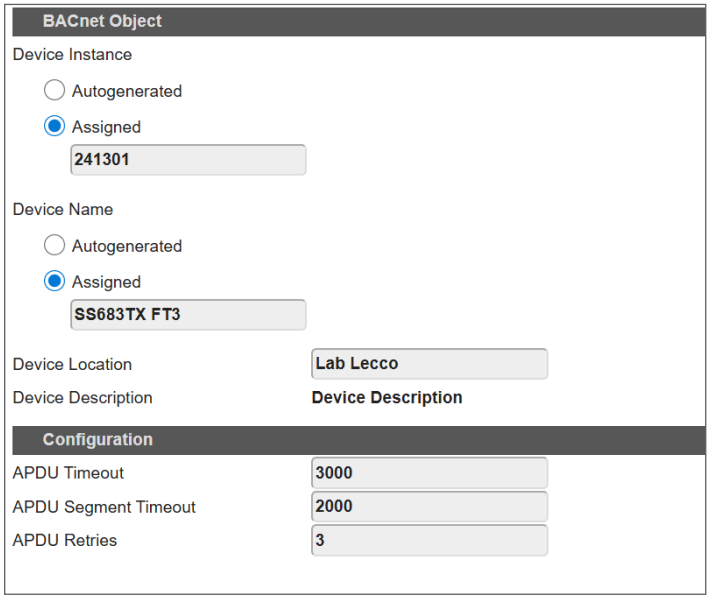

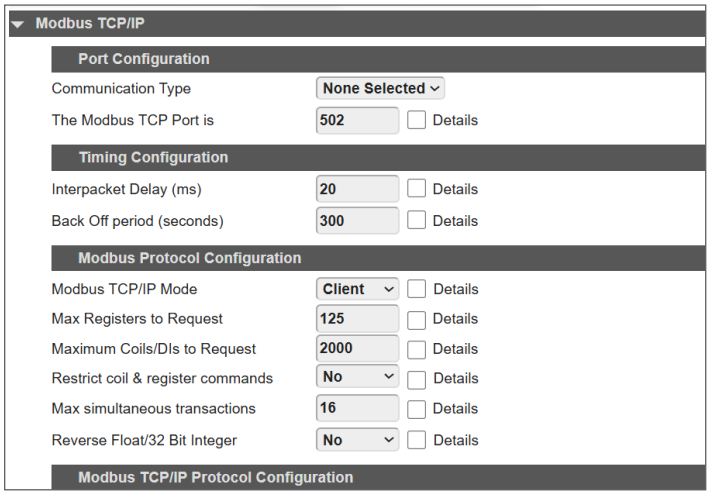

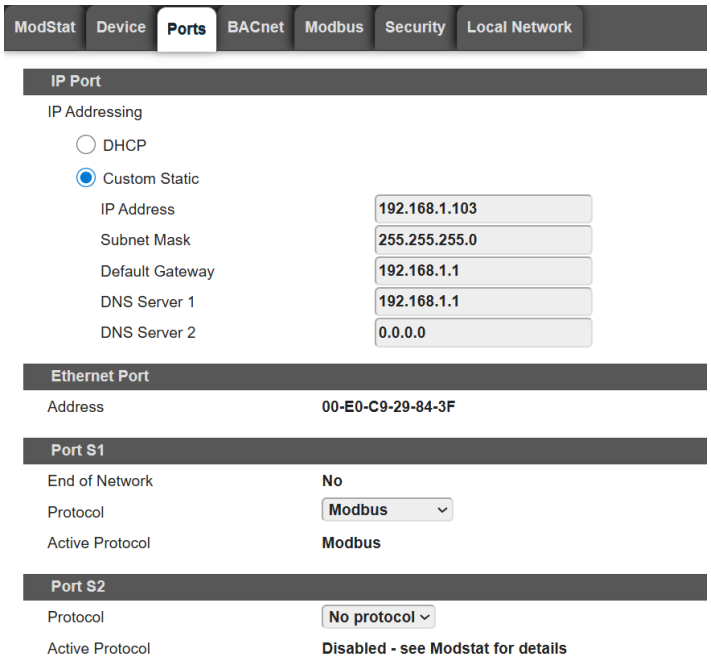

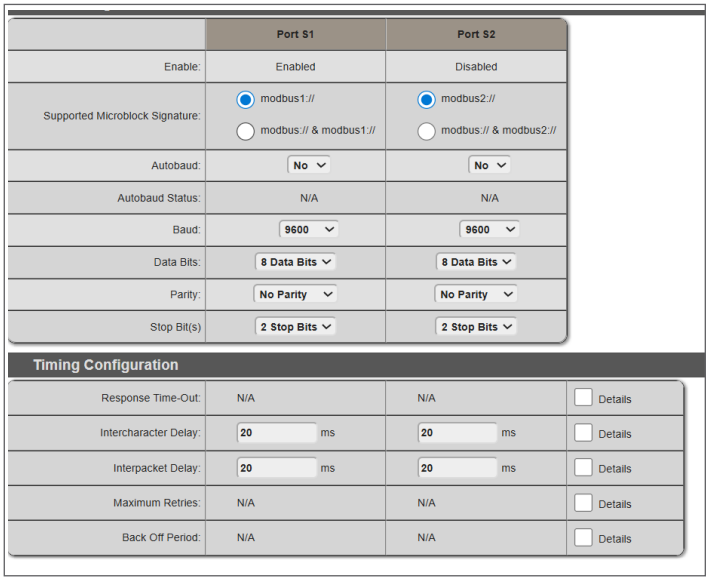

	Port S1	Port S2
Enable:	Enabled	Disabled
Supported Microblock Signature:	modbus1:// / modbus:// & modbus1://	modbus2:// / modbus:// & modbus2://
Autobaud:	No	No
Autobaud Status:	N/A	N/A
Baud:	9600	9600
Data Bits:	8 Data Bits	8 Data Bits
Parity:	No Parity	No Parity
Stop Bit(s)	2 Stop Bits	2 Stop Bits

Timing Configuration

Response Time-Out:	N/A	N/A	Details
Intercharacter Delay:	20 ms	20 ms	Details
Interpacket Delay:	20 ms	20 ms	Details
Maximum Retries:	N/A	N/A	Details
Back Off Period:	N/A	N/A	Details

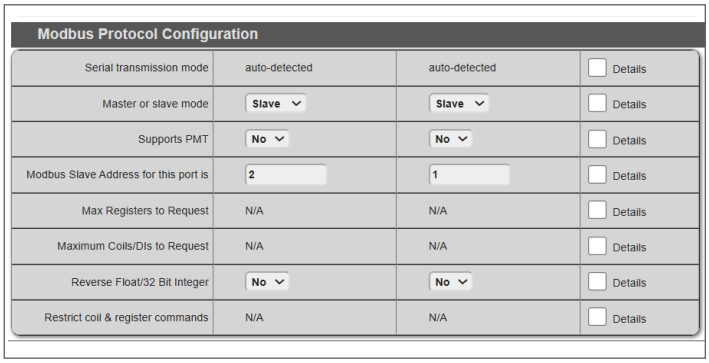

Modbus Protocol Configuration

Serial transmission mode	auto-detected	auto-detected	Details
Master or slave mode	Slave	Slave	Details
Supports PMT	No	No	Details
Modbus Slave Address for this port is	2	1	Details
Max Registers to Request	N/A	N/A	Details
Maximum Coils/DIs to Request	N/A	N/A	Details
Reverse Float/32 Bit Integer	No	No	Details
Restrict coil & register commands	N/A	N/A	Details

4.2 Modbus BMS settings

- Push the SETTINGS button ( ).

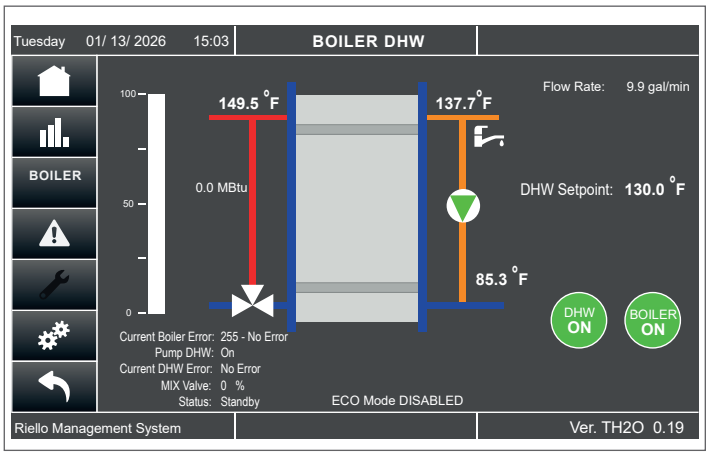

- the SETTINGS screen will appear, select INFO

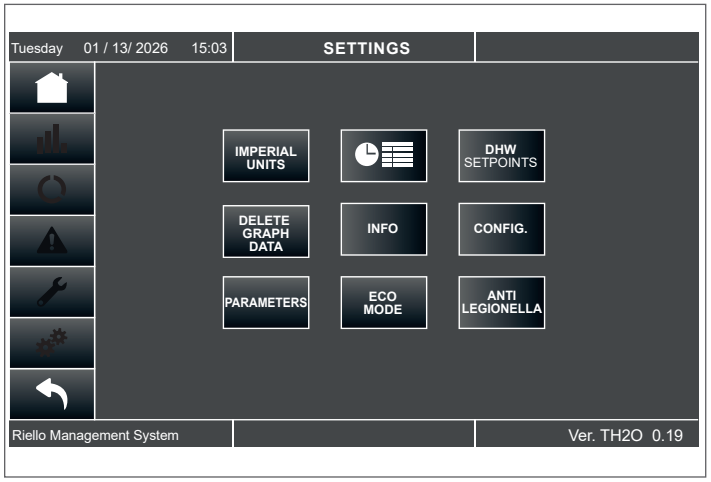

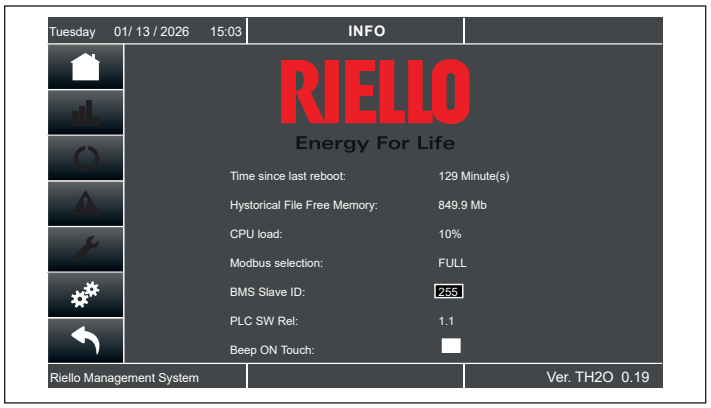

- Press the BMS Slave ID field to change the value.
- Change the value and press ok

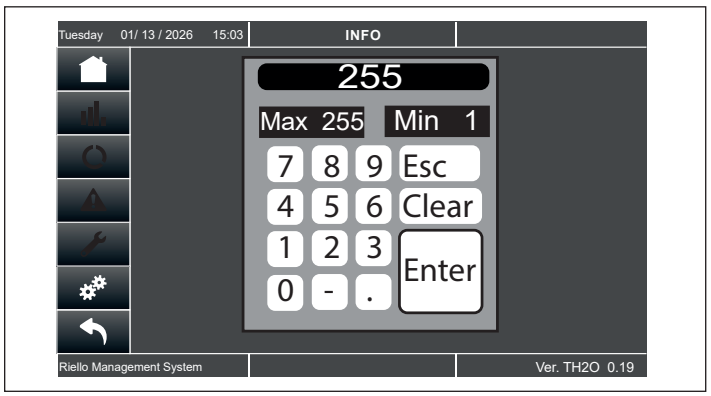

Modbus TS registers			Read	Write	Description	Factory	V/NV	Range		Data type
Cascade Manager Status	Boilers Available	2100	X		Boiler 1 available / present.	1	V	0=No. 1=Yes		
Cascade Manager Status	Boilers Active	2132	X		Boiler 1 is active / heating.	1	V	0=No. 1=Yes		
Cascade Manager Status		2139	X		System test	1	V	0=No. 1=Yes		
Cascade Manager Status	Boiler Errors	2164	X		System test	1	V	0=No. 1=Yes		
Cascade Manager Status	Boiler Service	2196	X		Boiler 1 requires service.	1	V	0=No. 1=Yes		
Boiler Registers	System Status Info	3000	X		Power level for the boiler.	10	V	0.0-100.0%		
Boiler Registers		3001	X		Boiler supply set-point (calculated)	10	V	39.2 - 194.0 °F 4.0-90.0 °C		
Boiler Registers		3020	X		Boiler Supply temperature	10	V	-40.0-302.0 °F -40.0-150.0 °C		
Boiler Registers		3080	X		Burn hours (total of all unit/burner burn hours)	1	0	0-65534 hr		
Boiler Registers	Module/Burner Available	3100	X		Module/Burner 1 available / present.	1	V	0=No. 1=Yes		
Boiler Registers		3101	X		Module/Burner 2 available / present.	1	V	0=No. 1=Yes		
Boiler Registers		3102	X		Module/Burner 3 available / present.	1	V	0=No. 1=Yes		
Boiler Service Reminder	Service Reminder Counters	3300	X		Hours since last service	1	NV	0..65534 hours	(Burn hours or operation hours, depends on the Service_Hour_Counter setting)	
Boiler Service Reminder		3301	X		Hours till service is required	1	NV	0..Service_Interval	(Burn hours or operation hours, depends on the Service_Hour_Counter setting)	
Boiler Error Log	Error Log Index 0	3400	X		Error Number	1	NV	See error list		
Module Registers	Module 1 System Status Info	4000	X		Current state of the unit/burner	1	V	State(*)	2 = Standby // 9 = Burn // 12 = Error // 13 = Alarm // 14= Warning	
Module Registers		4001	X		Error of the unit/burner	1	V	See error list		
Module Registers		4002	X		Module supply set-point (calculated)	10	V	68.0-194.0 °F 20.0-90.0°C		
Module Registers		4006	X		General pump status	1	V	0=Off. 1=On		
Module Registers		4009	X		Flow rate	10	V	0.0-x.x l/min		
Module Registers		4011	X		Actual fan speed	1	V	0..x RPM		
Module Registers		4030	X		Supply sensor temperature	10	V	-40.0-302.0 °F -40.0-150.0 °C		
Module Registers		4032	X		Return sensor temperature	10	V	-40.0-302.0 °F -40.0-150.0 °C		
Module Registers		4035	X		Flue sensor temperature	10	V	-40.0-302.0 °F -40.0-150.0 °C		
Module Registers		4052	X		Burn hours total	1	V	0..65534Hours		
Module Registers	Module 2 System Status Info	4100	X		Current state of the unit/burner	1	V	State(*)	2 = Standby // 9 = Burn // 12 = Error // 13 = Alarm // 14= Warning	
Module Registers		4101	X		Error of the unit/burner	1	V	See error list		
Module Registers		4102	X		Module supply set-point (calculated)	10	V	68.0-194.0 °F 20.0-90.0°C		
Module Registers		4106	X		General pump status	1	V	0=Off. 1=On		
Module Registers		4109	X		Flow rate	10	V	0.0-x.x l/min		
Module Registers		4111	X		Actual fan speed	1	V	0..x RPM		
Module Registers		4130	X		Supply sensor temperature	10	V	-40.0-150.0°C		
Module Registers		4132	X		Return sensor temperature	10	V	-40.0-150.0°C		
Module Registers		4135	X		Flue sensor temperature	10	V	-40.0-150.0°C		
Module Registers		4152	X		Burn hours total	1	V	0..65534Hours		

Modbus TS registers			Read	Write	Description	Factory	V/NV	Range		Data type
Module Registers	Module 3 System Status Info	4200	X		Current state of the unit/burner	1	V	State(*)	2 = Standby // 9 = Burn // 12 = Error // 13 = Alarm // 14= Warning	
Module Registers		4201	X		Error of the unit/burner	1	V	See error list		
Module Registers		4202	X		Module supply set-point (calculated)	10	V	68.0-194.0 °F 20.0-90.0°C		
Module Registers		4206	X		General pump status	1	V	0=Off. 1=On		
Module Registers		4209	X		Flow rate	10	V	0.0-x.x l/min		
Module Registers		4211	X		Actual fan speed	1	V	0..x RPM		
Module Registers		4230	X		Supply sensor temperature	10	V	-40.0-302.0 °F -40.0-150.0 °C		
Module Registers		4232	X		Return sensor temperature	10	V	-40.0-302.0 °F -40.0-150.0 °C		
Module Registers		4235	X		Flue sensor temperature	10	V	-40.0-302.0 °F -40.0-150.0 °C		
Module Registers		4252	X		Burn hours total	1	V	0..65534Hours		
Power Level		14	X		Boiler Power Level (0.1 %)	10		0 - 100%		
Power Level		110	X		Module 1 Power Level (0.1 %)	10		0 - 100%		
Power Level		111	X		Module 2 Power Level (0.1 %)	10		0 - 100%		
Power Level		112	X		Module 3 Power Level (0.1 %)	10		0 - 100%		
Writing Parameters	Write Request Activation	483 bit 0	X	X						
	Address Register to Write	484	X	X						
	Value to Write	485	X	X						
Direct writing (3X)	PLC Info	5000	X	X	DHW Setpoint	1	Input no range	32bit Float	bacnet://241301/ AV:5034	
Direct writing (0x)		2100	X	X	ON/OFF DHW	**		bit(coil)	bacnet://241301/ AV:5019	
		5010	X		Sanitary Supply Temp. DX	1		32bit Float	bacnet://241301/AV:7	
		5012	X		Sanitary Supply Temp. SX	1		32bit Float	bacnet://241301/AV:8	
		5014	X		Sanitary Return Temp. SX	1		32bit Float	bacnet://241301/AV:9	
		5018	X		Flow	1		32bit Float	bacnet://241301/AV:23	
		5020	X		Current Error	1		32bit Float	bacnet://241301/AV:33	
		5022	X		Boiler Mode	1		32bit Float	bacnet://241301/AV:32	
		5048	X		Heat Exchanger Presence	1		32bit Float	bacnet://241301/BO:3	
		5100	X		Current Boiler Power	1		32bit Float	bacnet://241301/AV:5	
		5102	X		Current Error From EBM (Man)	1		32bit Float	bacnet://241301/AV:4	

Modbus TS registers			Read	Write	Description	Factory	V/NV	Range		Data type
		5104	X		Current Error From EBM (Dep1)	1		32bit Float	bacnet://241301/AV:2	
		5106	X		Current Error From EBM (Dep2)	1		32bit Float	bacnet://241301/AV:3	
All the register are based on a "32 bit float register" To write the parameter 5000: you can write directly without set any "request" bit Pay attention on the 2100 : because it is a coil not a register										

4.3 Venting

ARRAY TH20 instantaneous water heaters must be vented and supplied with combustion and ventilation air as described in this section.
Installation must comply with local requirements and with the National Fuel Gas Code ANSI Z223.1. **ARRAY TH20** instantaneous water heaters vent and intake air piping can be installed through the roof or through a sidewall.
Any of the vent/air piping methods covered in this manual can be used. Do not attempt to install the instantaneous water heaters using any other means.
Suitable, UL approved, positive pressure, watertight vent materials **MUST** be used for safety and UL certification.
ARRAY TH20 can use the following material for venting:

Material	Standard	Maximum Flue Temperature (°F/°C)	Approved manufacturers
CPVC Schedule 40. 80	ANSI/ASTM F441	194 °F (90 °C)	
Polypropylene	ULC S636	230 °F (110 °C)	Centrotherm Eco Systems (InnoFlue SW)
AL29-4C stainless steel	UL 1738	300+ °F (149 °C+), limited only by rating of seals	

For specific venting components (terminals, fittings), contact the respective vent manufacturer.

DANGER: It is extremely important to follow these venting instructions carefully. Failure to do so can cause severe personal injury, death or substantial property damage.

DANGER: Use of cellular core PVC (ASTM F891), cellular core CPVC or Radel® (polyphenosulfone) in venting systems is prohibited.

WARNING: Do not connect this gas appliance with any other appliance unless approved by manufacturer. Failure to comply with this WARNING could result in the accumulation of carbon monoxide gas which can cause severe personal injury or death

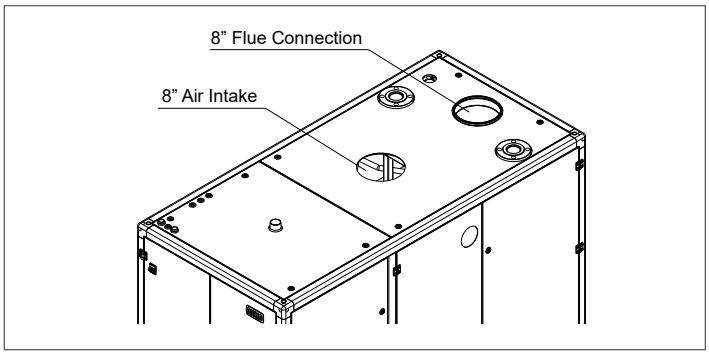

Fig. 27 *Combustion Air and Flue Gas connections*

DANGER: The condensate traps must be filled with water or combustion gases will enter the room with a risk of an excessive level of carbon monoxide.

- Vent connectors serving appliances vented by natural draft shall not be connected to any portion of mechanical draft systems operating under positive pressure.
- Ensure the flue pipes and seals are not damaged.
- Use only primer and glue compounds approved for use with the vent material used.
- Never install a barometric or a thermally controlled vent damper with this appliance.
- Do not route the flue system piping through or inside another duct that is used for exhausting air or other flue gases.
- The condensate traps must be primed at all times. Failure to do so may allow combustion gases to escape into the appliance room.
- The unit is to be used for either direct vent installation or for installation using room air for combustion, when room air is used, it is necessary to provide an adequate opening for the fresh make-up air intake.
- You must use any of the vent/air piping methods shown in this manual.
- Be sure to locate the unit such that the vent and combustion air piping can be routed through the building and properly terminated.
- The appliance/vent installation must be in accordance with Venting of Appliances, of the latest edition of the National Fuel Gas Code, ANSI Z223.1/NFPA or applicable provisions of the local, state and federal building codes.
- All vent pipes must be installed according to the vent manufacturer's instructions.
- The exhaust vent and the combustion air inlet lines must be supported to prevent sagging per the vent manufacturer's instructions.
- The appliance must not support the weight of any ductwork.
- Do not mix components from different systems. The vent system could fail, causing leakage of flue products into the living space. Use only approved materials.
- Use of cellular core PVC and CPVC for venting system is not allowed.
- The vent system shall be installed so as to prevent the accumulation of condensate.
- Consult local and state codes pertaining to special building code and fire department requirements. Adhere to national code requirements.
- Observe the listed maximum lengths of vent system, which are appliance model dependent.
- To avoid moisture and frost build-up and to maintain clearances to openings on adjacent structures. 45° and 90° elbows or tees may be attached to the end of the vent termination pipe to direct exhaust plumes away from the adjacent structure. The total allowable vent length, maximum

number of elbows and distance of air intake restrictions must be adhered to.

- Due to the high efficiency of the unit it may discharge what looks like white smoke especially when the outside air temperature is cold. This is due to the presence of water vapor, normally present in the exhaust gases.

VENTING CONFIGURATIONS: The following figures show the acceptable piping installation for venting and combustion air.

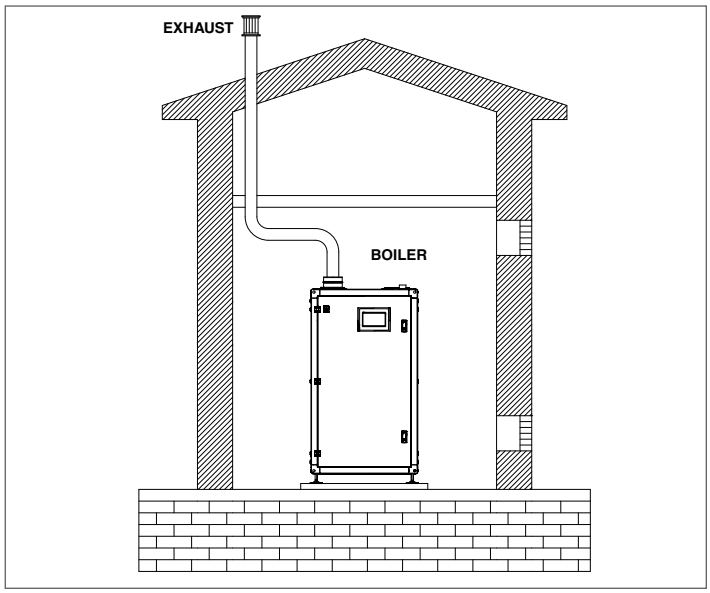

Fig. 28 *All Combustion Air from Adjacent Indoor Spaces through Indoor Combustion Air Openings*

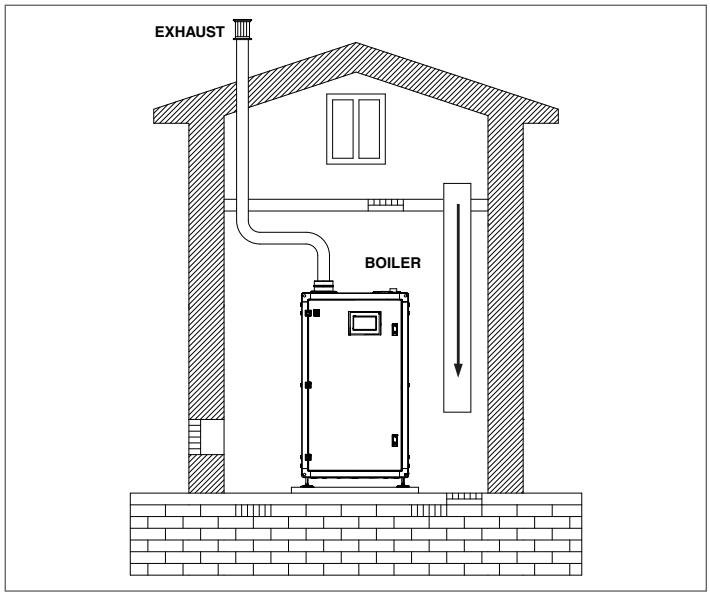

Fig. 29 *All Combustion Air from Outdoors through a Ventilated attic*

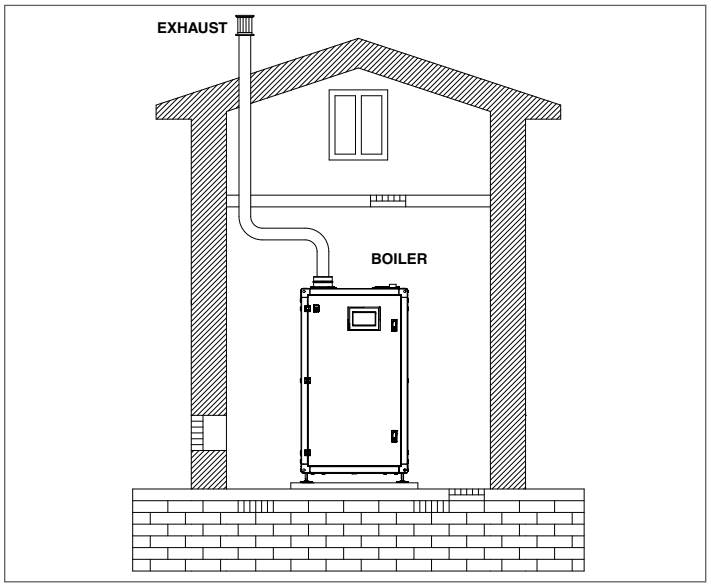

Fig. 30 *All Combustion Air From Outdoors – Inlet Air From Ventilated Crawl Space and Outlet Air to Ventilated Attic*

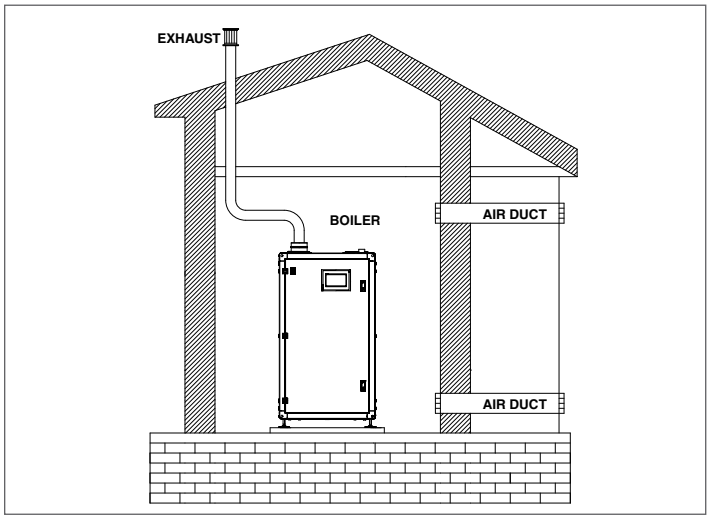

Fig. 31 *All Combustion Air from Outdoors through Horizontal Ducts*

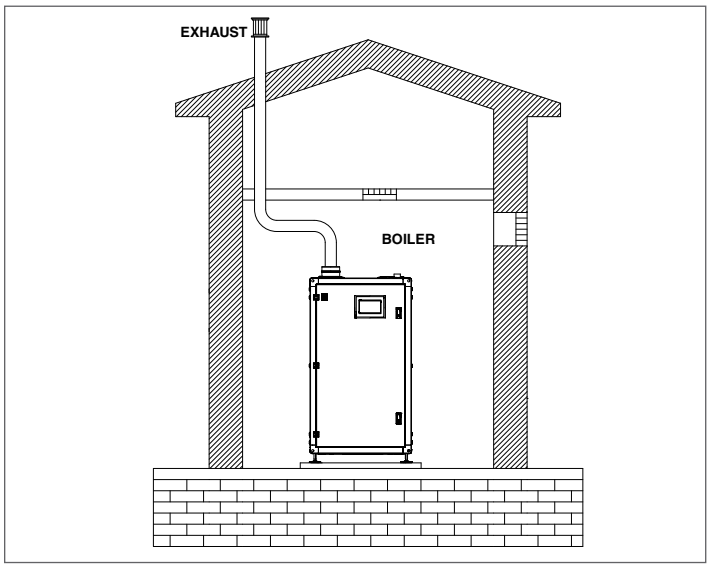

Fig. 32 *All Combustion Air from Outdoors through Single Combustion Air Opening*

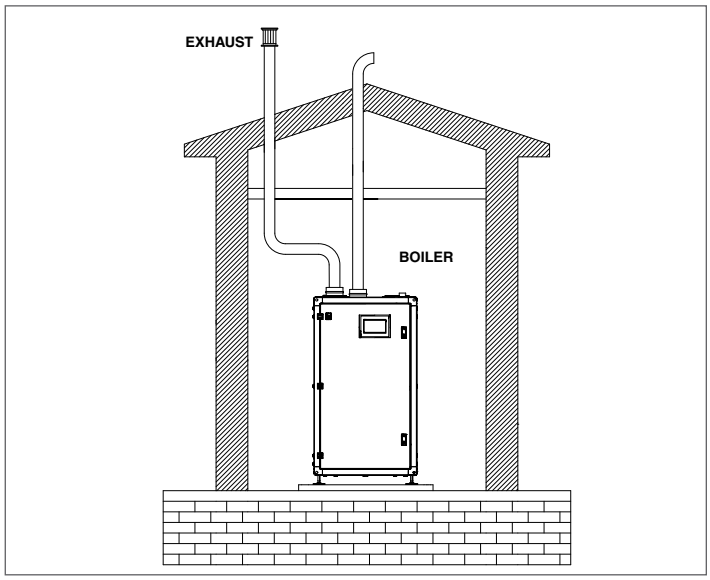

Fig. 33 *Sealed Combustion located on the same side as the Exhaust (vertical)*

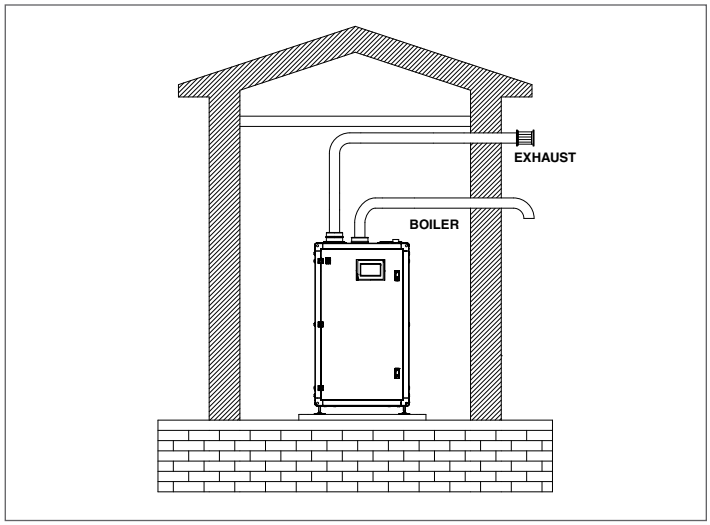

Fig. 34 *Sealed Combustion Located on Same Side with Exhaust (horizontal)*

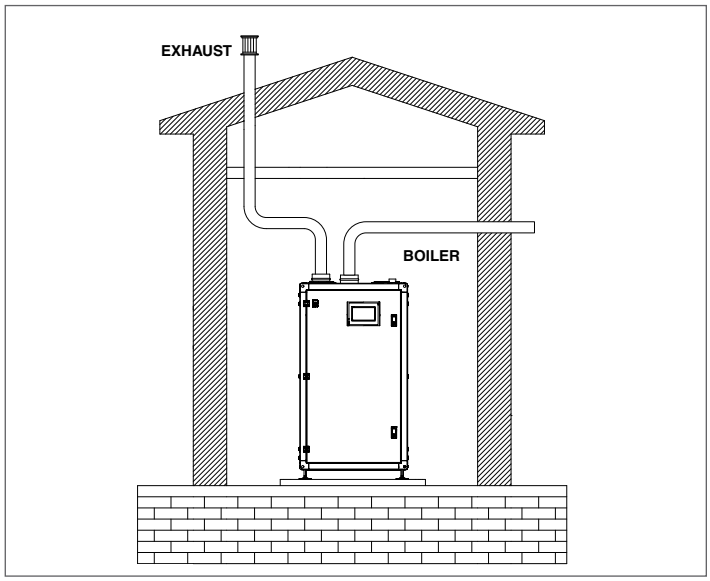

Fig. 35 *Sealed Combustion Located on Side Wall*

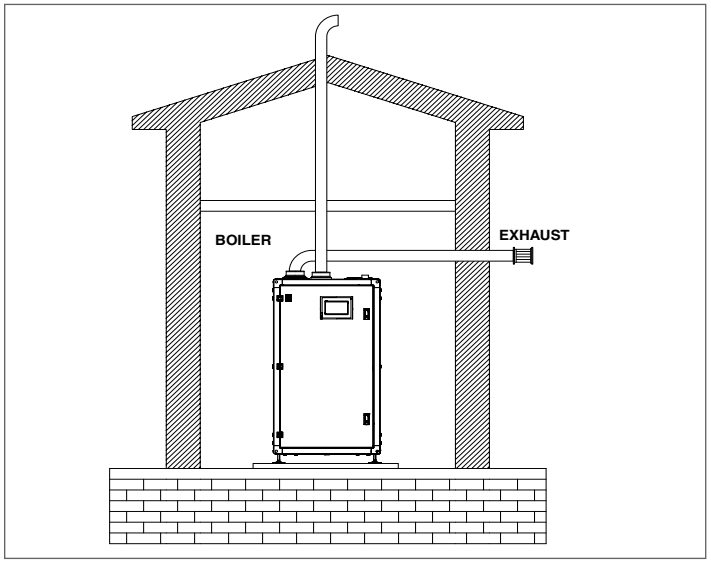

Fig. 36 *Exhaust Located on Side Wall*

- Terminating the vent above a door or window is not recommended because can freeze causing ice formations.
- Do not use chimney as a raceway if another appliance or fireplace is vented into or through chimney.
- Because the unit is capable of discharging low temperature exhaust gases, the flue must be pitched back towards the unit a minimum of 1/4" per foot to avoid any condensate pooling and to allow for proper

drainage.
- While there is a positive flue pressure during operation, the combined pressure drop of vent and combustion air systems must not exceed the limits listed in "Appendix F – Venting Size Data".

Fittings as well as pipe lengths must be calculated as part of the equivalent length.
- For a natural draft installation the draft must not exceed – 0.25" w.c.
- These factors must be planned into the vent installation. If the maximum allowable equivalent lengths of piping are exceeded, the unit will not operate properly or reliably.
- For Massachusetts installations, contact companies able to provide vent systems which conform to all applicable requirements for installations within the Commonwealth of Massachusetts.
- For installation of multiple instantaneous water heaters, common venting shall be sized based on the data in "Appendix F – Venting Size Data".

4.4 Combustion Air

Air supply is a direct requirement of ANSI 223.1, NFPA-54, CSA B149.1 and local codes. These codes should be consulted before a permanent design is determined.
ARRAY TH20 series utilize combustion air from the space in which they are installed, or utilize combustion air ducted directly to the unit. Ventilation air must be provided in either case.

Material	Standard
ABS	ANSI/ASTM D1527
PVC Schedule 40	ANSI/ASTM D1785 or D2665
CPVC Schedule 40	ANSI/ASTM F441
Polypropylene	ULC S636
Single wall galvanized steel	26 gauge

In cold climates it is essential to provide a motorized air inlet damper to control the supply of combustion air and prevent nuisance condensation.

The combustion air must be free of:
- Permanent wave solutions;
- Chlorinated waxes/cleaners;
- Chlorine-based swimming pool chemicals;
- Calcium chloride
- Sodium chloride used for water softening;
- Refrigerant leaks;
- Paint or varnish removers;
- Hydrochloric acid/muriatic acid;
- Cements and glues;
- Antistatic fabric softeners used in clothes dryers;
- Chlorine-type bleaches, detergents and cleaning solvents found in household laundry rooms;
- Adhesives used to fasten building products and other similar products.

To prevent contamination do not connect the combustion air inlet and exhaust near:
- Dry cleaning/laundry areas and establishments;
- Swimming pools;
- Metal fabrication plants;
- Beauty shops;
- Refrigeration repair shops;
- Photo processing plants;
- Auto body shops;
- Plastic manufacturing plants;
- Furniture refinishing areas and establishments;
- Remodeling areas;
- Garages with workshops

Whenever the environment contains these types of chemicals, combustion air MUST be supplied from a clean area outdoors for the protection and longevity of the equipment and warranty validation.
The more common methods of combustion air supply are outlined in the following sections.

4.4.1 Combustion Air From Outside the Building

Air supplied from outside the building must be provided through two permanent openings. For each unit these two openings must have a free area in accordance with the requirements of CAN/CSA B149.1. Natural Gas and Propane Installation Code. The free area must take into account restrictions such as louvers and bird screens.

4.4.2 Combustion Air From Inside the Building

When combustion air is provided from within the building, it must be supplied through two permanent openings in an interior wall. Each opening must have a free area of not less than one square inch per 1000 BTUH of total input or 3000 square inches of free area. The free area must take into account any restrictions, such as louvers.

4.4.3 Ducted Combustion Air

For ducted combustion air installations, the air ductwork must be attached directly to the air inlet connection on the sheet metal enclosure.
In a ducted combustion air application, the combustion air ducting pressure losses must be taken into account when calculating the total maximum allowable venting length.
For additional details, see "Appendix F – Venting Size Data".

5 COMMISSIONING

5.1 Introduction

Before starting the instantaneous water heater, the installer must properly instruct the user on how to operate the heater, in particular:

- Make sure that the user understands that combustion air and ventilation openings must not be restricted, closed, or modified in any way.
- Make sure that the user is informed of all the special measures to be taken for combustion air inlet and discharging flue gases and that these must not be modified in any way.
- Make sure that the user keeps this manual and all other documentation included with the appliance.
- Make sure that the user understands never to tamper with gas control settings and the risk of fire, explosion, or CO poisoning should an unauthorized individual do so.
- Make sure that the user knows how to adjust temperatures and controls.

⚠ **WARNING:** Do not attempt to dry fire the unit. Starting the unit without a full water level can seriously damage the unit and may result in injury to personnel or property damage. This situation will void any warranty.

⚠ **CAUTION:** before starting the unit, ensure that all procedures described in Section "3 Installation", have been completed.

5.2 Filling the Condensate System

The condensate system must be filled with water according to the Section 3.8.4.

⚠ **WARNING:** At Startup and after prolonged shutdown of the instantaneous water heater, the condensate traps and the siphon must be filled with water prior to restarting it, otherwise combustion gases will enter the room with a risk of an excessive level of carbon monoxide.

5.3 Filling the Primary Circuit

⚠ Use only untreated potable water to fill the primary circuit. Do not use glycol or any additives.

⚠ CAUTION: to protect the fans from any dripping water that may originate from the air vent as the air is purged.

To fill the Primary Circuit, proceed as follows:

- Open any automatic air vents.
- Connect the tube (A) to the tap (B) of the supply manifold (this operation can be performed also to the return manifols – refer to A1 – B1)

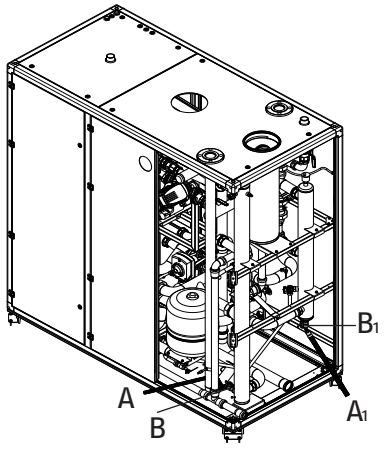

- Open the fill valve and proceed to fill the appliance until the pressure gauge (shown on Fig. 37), reads the pressure for which the heating system is sized. The heating system water pressure must be higher than 7.5 PSI.
- Check for any water leaking from the fittings. If there is, the leaks must be repaired.
- Check the pressure gauge during the purging process. If the pressure has dropped, re-open the fill valve to bring the pressure back to the desired value.
- Purge air from the air release valve.

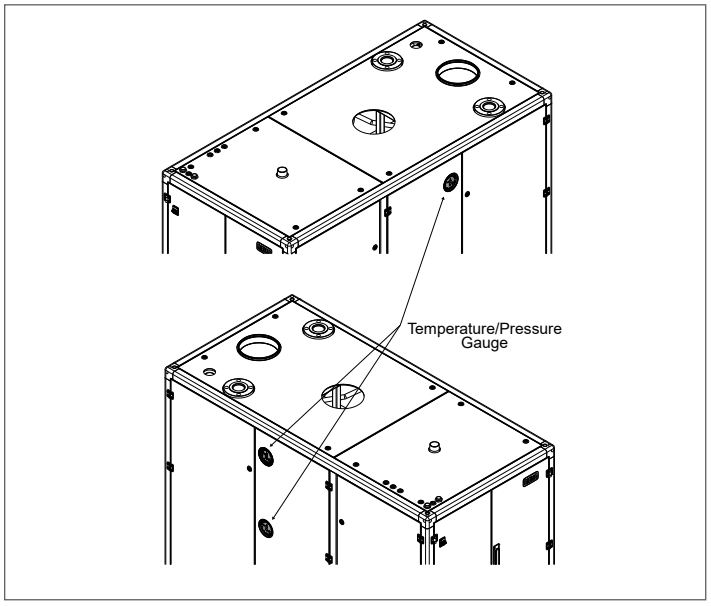

Fig. 37 *Temperature/Pressure Gauge location*

5.4 Warnings Concerning the Gas Supply

When starting up the unit for the first time the following must be checked:

- That the unit is supplied with the type of fuel that it is configured to use.
- That the gas supply system is provided with all the safety devices and controls required under current national and local codes.
- That the vent and combustion air terminals are properly connected and free from any blockages.
- That the condensate drain tube is properly connected.

5.4.1 Gas Type guideline

The type of gas and supply pressure for which the unit is configured is listed on the rating label. The **ARRAY TH20** series can operate using the following gas:

NATURAL GAS

- Maximum supply pressure = 13.5" w.c. (33.6 mbar).
- Minimum supply pressure = 4" w.c. (10 mbar).
- Recommended supply pressure = 8" w.c. (20 mbar).

5.5 Appliance Startup Procedure

To start the instantaneous water heater, do the following:

- Push all Modules power switches to ON.
- Turn ON the main power switch to ON.
- Open the manual gas shut off valve.
- To help remove the air from the hydraulic circuit, the De-airing function can be started for each module.
- The Touchscreen Control Panel will switch on. The Splash/ Standby screen consists of the RIELLO logo:

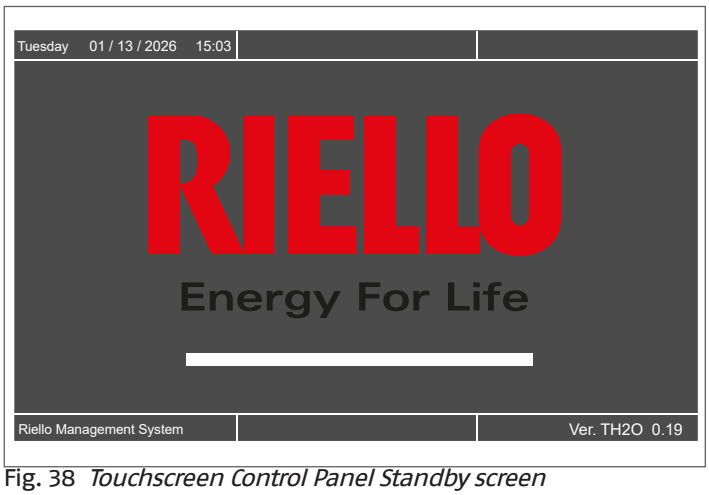

Fig. 38 *Touchscreen Control Panel Standby screen*

The RIELLO logo is the entry point of the Control System. By touching it, the system moves to the first operating screen, the Cascade screen.

The status bar switch can have the following colors depending on the status:
a. White: system has no error and requires no service.
b. Red: system has an error.
c: Yellow: at least one unit requires service.
After 30 minutes of inactivity the touchscreen will go to its screensaver. The screensaver sets the screen of the touchscreen to black. The screensaver is triggered regardless of which screen the touchscreen is currently on and will also occur if the system has an error or requires service.

DHW ON / DHW OFF button
Pressing DHW ON switches the function to DHW OFF.
With DHW ON, the domestic hot water (DHW) function operates normally.

With DHW OFF, any DHW demand is ignored; however, all primary-side functions and protections remain active.

BOILER ON / BOILER OFF button
Pressing BOILER ON switches the function to BOILER OFF.
With BOILER ON, the boiler operates normally.
With BOILER OFF, all heating and DHW demands are ignored and boiler operation is disabled.

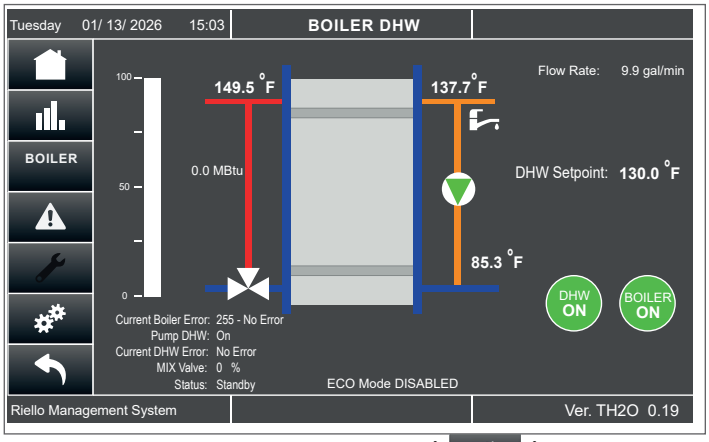

- Pushing the SETTINGS button ( ), the SETTINGS screen will appear:

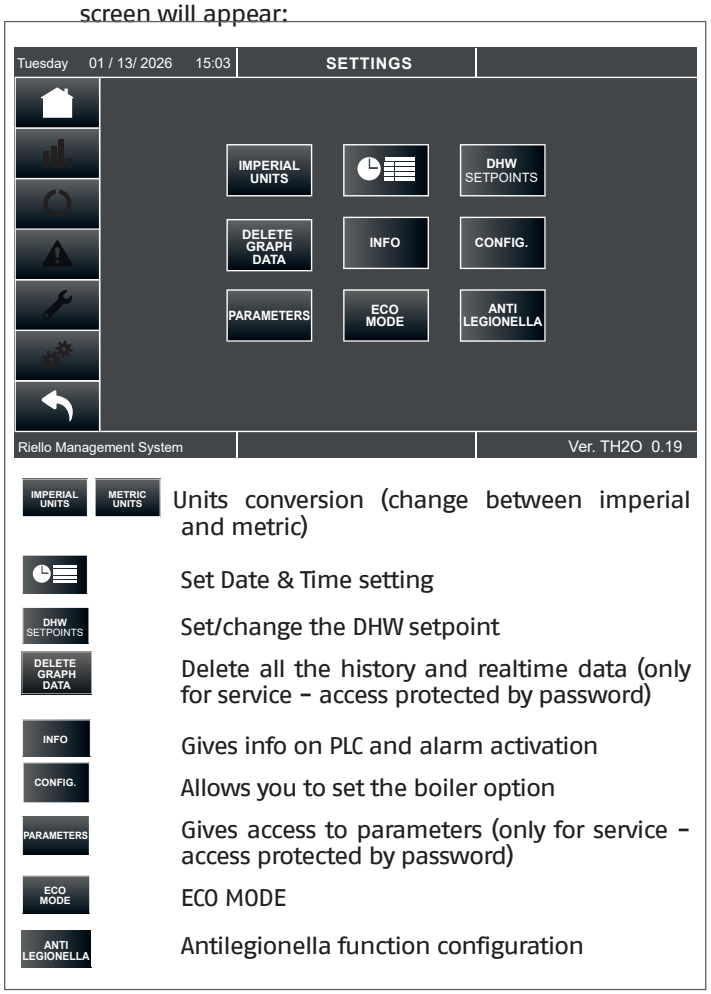

IMPERIAL UNITS / METRIC UNITS — Units conversion (change between imperial and metric)

Set Date & Time setting

DHW SETPOINTS — Set/change the DHW setpoint

DELETE GRAPH DATA — Delete all the history and realtime data (only for service - access protected by password)

INFO — Gives info on PLC and alarm activation

CONFIG. — Allows you to set the boiler option

PARAMETERS — Gives access to parameters (only for service - access protected by password)

ECO MODE — ECO MODE

ANTI LEGIONELLA — Antilegionella function configuration

FIG. 39 *Settings screen*

5.6 SET the Date & Time:

From SETTINGS screen, tap the button to enter data and time selection Use + and - to set date and time.
Confirm the setting with .

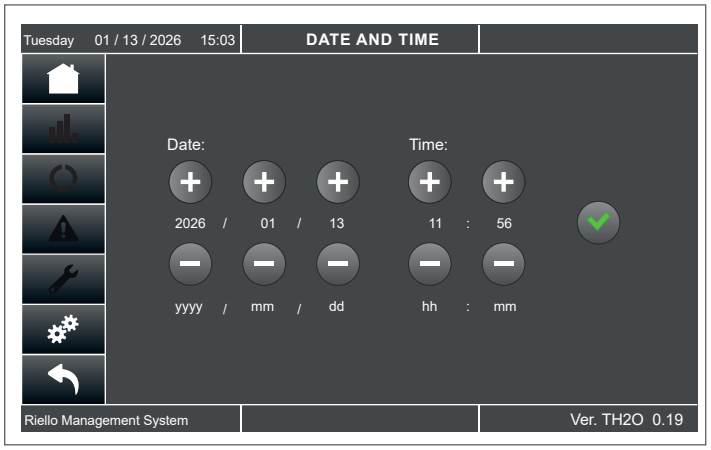

Fig. 40 *Date and Time screen*

5.7 Configure the appliance

- Verify that the selected instantaneous water heater corresponds to the version shown on the Technical Data Label.

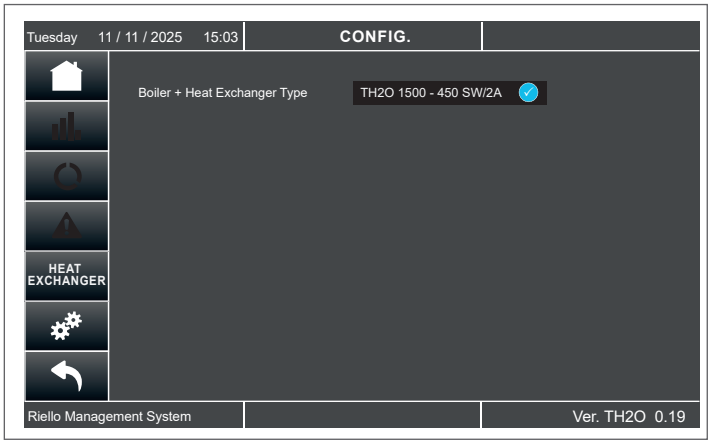

Fig. 41 *Config. screen*

From SETTINGS screen, tap CONFIG. screen, it is possible to select the **ARRAY TH20** type.

By pressing the HEAT EXCHANGER button on the left of the screen it is possible to:

- select how many DHW plate heat exchangers are available and which one is active
- enable the Heat Exchanger Auto-Change function
- check the total number of operating hours since the last switch
- force the manual change of the DHW plate heat exchanger via MANUAL CHANGE if necessary
- read time from last DHW plate heat exchanger change and time from last dirty check.

In this screen the RESET HE button allows to reset the dirty DHW plate heat exchanger error from last inspection/service (refer to PLC error table n. 303 - 304).

- Exch. 1= SX
- Exch. 2= DX

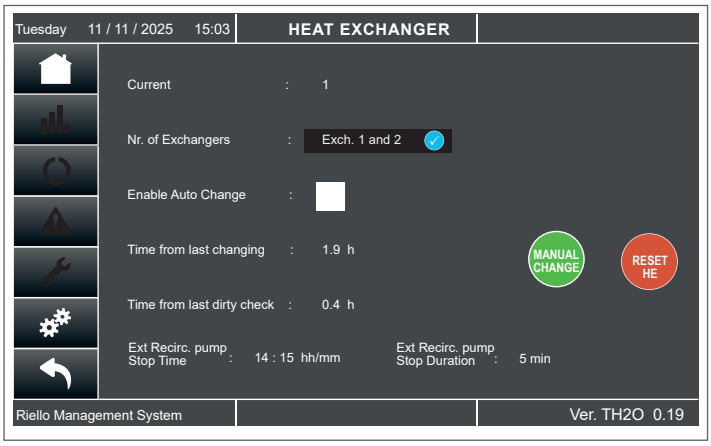

Fig. 42 *Heat exchanger screen*

5.8 Configure the Antilegionella

For the safety notes refer to paragraph 1.2.3.

THE SETTING OF THE TEMPERATURE AND TIME IS UNDER RESPONSIBILITY OF THE INSTALLER/USER TO ALLOW EACH STRICTLY NATIONAL STANDARD.

If both DHW plate exchangers are present and AUTO CHANGE Heat exchanger is enabled: the antilegionella cycle must be performed on both heat exchangers.

At the end of the cycle, the initially selected exchanger must be put back into operation (even in case of power OFF/power ON during the cycle).

Press the button and then tap the ANTI LEGIONELLA button to access the related screen.
From here it is possible to:
- Select the weekly date and time
- Select setpoint and duration
- View the number of hours since the last cycle
- Select the Antilegionella type: Boiler Only or Complete System.

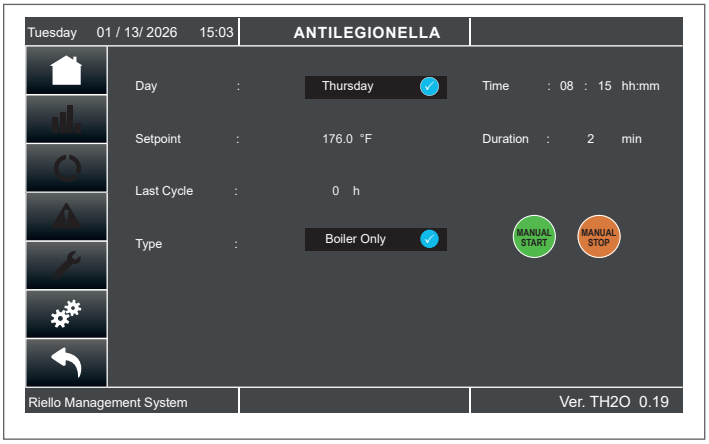

Fig. 43 *Antilegionella screen*

A. Boiler Only
Applies only to internal plate heat exchangers.
The supply temperature of the heat exchanger is monitored and the timing starts once the setpoint temperature is reached.
If the setpoint temperature is not reached the appliance increases the temperature by 1.8 °F (1°C) every 60 seconds (default value - it can be modified in parameters screen) and repeats the process until the Antilegionella cycle starts.
Therefore, the Antilegionella cycle may occur at temperatures higher than the nominal setpoint.
At the scheduled time, if the appliance detects a flow rate at the inlet, the function is postponed by 24 hours, up to a maximum of 6 attempts.
The touchscreen displays error 311.

Antilegionella is postponed by 24 hours due to DHW request.

After 6 attempts, the WARNING 312 (ANTILEGIONELLA MAX ATTEMPTS) is displayed.

Otherwise if the Antilegionella function is in progress and the appliance detects a flow rate on the inlet at the Antilegionella schedule time, the boiler continues to operate at Antilegionella setpoint till the end of the program.

B. Complete System
Applies to the entire system; in this case, an external recirculation pump is required.

The return temperature probe is monitored.

The Antilegionella cycle starts in any case, regardless of the flow rate detected by the flow meter.
If the setpoint temperature is not reached the appliance increases the temperature by 1.8 °F (1°C) every 300 seconds (default value - it can be modified in parameters screen) and repeats the process until the Antilegionella cycle starts.
Therefore, the Antilegionella cycle may occur at temperatures higher than the nominal setpoint.

In any case, regardless of the configurations described above, the AntiLegionella function can be performed in either Scheduled or Manual mode.
By pressing the button MANUAL START the Antilegionella function starts.
By pressing MANUAL STOP the ANTILEGIONELLA function stops.

This STOP action is password protected and can only be

performed by qualified technicians.
If both plate heat exchangers are present and AutoChange is enabled: the antilegionella cycle is performed on both heat exchangers. Otherwise, the antilegionella cycle must be performed on one heat exchanger at a time using the 'Manual change' button.

At the end of the cycle, the initially selected exchanger is put back into operation (even in case of power OFF/power ON during the cycle).

The Antilegionella cycle has a maximum duration of 20 minutes. If, after 20 minutes, the appliance has not reached the antilegionella setpoint, alarm 310 is triggered.

To Stop ANTILEGIONELLA function, from its page press MANUAL STOP, the password setup view opens.

Click on the designated area to access the user and password entry window.



- Digit Riello for user and press enter



- Enter into the field password and digit the Riello password



- Press Enter.
- Select OK to validate.
- Press the MANUAL STOP button again to have to confirm.

Once STOP has been executed, the Antilegionella function will resume automatically according to the scheduled program.

WARNING: the outlet temperature could be higher than DHW setpoint.
Refer to "1.2.1 General safety" and "1.2.2 Scalding time/ temperature relationships" to prevent risk of scalds.

5.9 Configure the DHW setpoint

From SETTINGS screen, tap DHW SETPOINTS. You can increase and decrease the value with + or −.
When the value reaches the recommended temperature the value is displayed in green colour.
Confirm with OK.

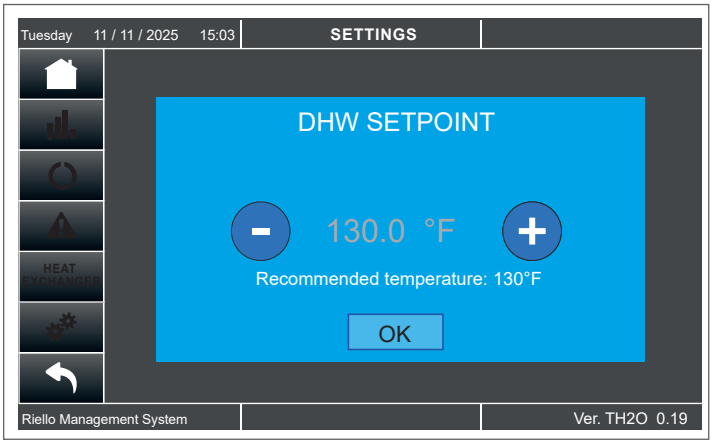

FIG. 44 *DHW setpoint screen*

5.10 Explanation of the boiler screen

Through this screen, the following actions can be performed:

- Check the status of the boiler (ON, OFF, in error)
- See the current supply temperature at the Primary side of the boiler
- Primary side temperatur
- DHW Setpoint set
- DHW supply temperature
- Boiler current error (only if the instantaneous water heater has a locking or blocking error)
- Pump status
- Current DHW error
- Mix valve status
- Power bar

The warning icon indicates a non-lockout fault in the water heater, which may result from one of the units being switched off or not operating correctly. The water heater continues to function, but with reduced output capacity.

- Power on/off the appliance, with the BOILER ON button, when the button is Boiler OFF the boiler demand is disabled.
- Change from DHW ON DHW ON to OFF.
- When DHW is OFF the setpoint to the primary side is set to 32 °F (0 °C).

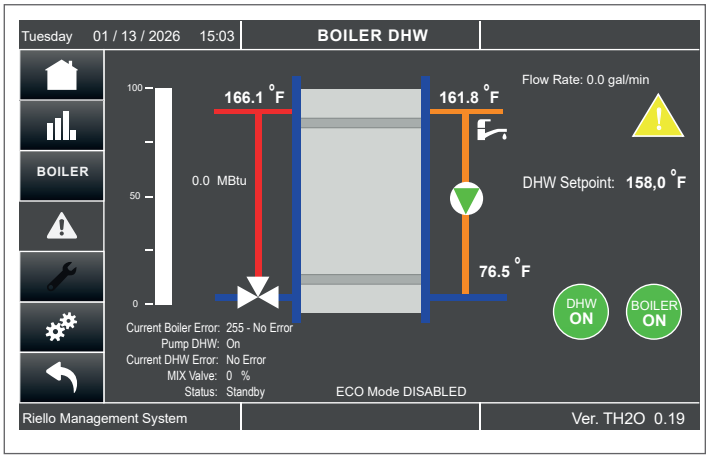

Fig. 45 *Boiler DHW screen*

Use the side buttons to perform the actions listed below:



- **Home button:** move back to the RIELLO screen;
- **Performance button**: move to the Performance screen of the flame controller management;
- **BOILER button:** move to the Boiler screen (overview boiler status)
- **Errors button:** move to the Errors screen;
- **Service button:** move to Service screen;
- **SETTINGS:** opens the setting screens
- **Back button:** move to the previous screen.

Note: when the buttons are in white color they are active, when they are black they are inactive

5.10.1 Performance Screen

By pressing the  button you access the performance screen.

There is the possibility to check two kinds of graph by pressing the relative button you can switch from realtime to history graph.

Realtime graph

The Control system is able to show the last 10 minutes "realtime" performance of the boiler. The screen shows different information according to the context.

The Boiler DHW Graph includes the trend of:

1 Boiler temperature (Temperature supply from the primary side)
2 Current Power Level
3 Current Exchanger
4 DHW setpoint
5 DHW Output temperature
6 Mixvalve opening %

Press 🗑 to delete the realtime data graph. It is asked to confirm the operation.

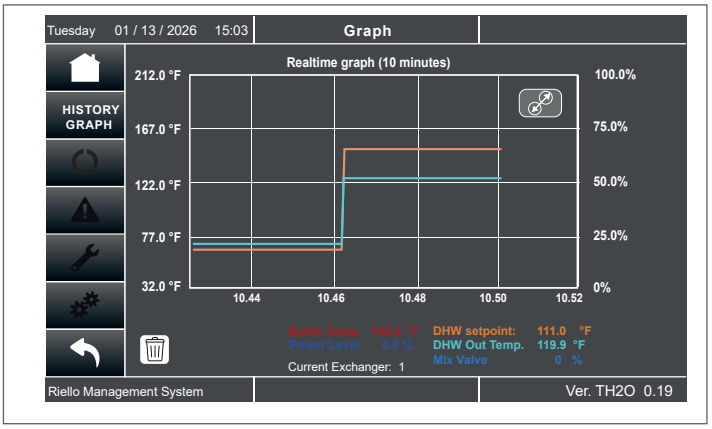

Fig. 46 *Realtime graph*

History graph

The History graph is able to show info of the last 30 days.

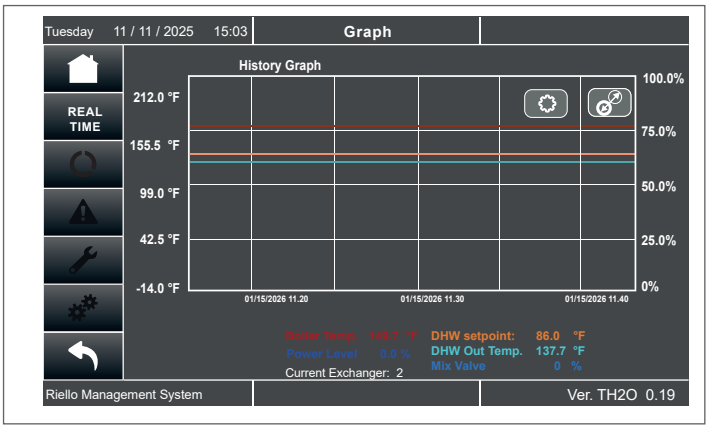

Fig. 47 *History graph*

5.11 Delete graph data

From SETTINGS screen tap the 

button, the password setup view opens.

Click on the designated area: to access the user and password entry window.



- Digit Riello for user and press enter

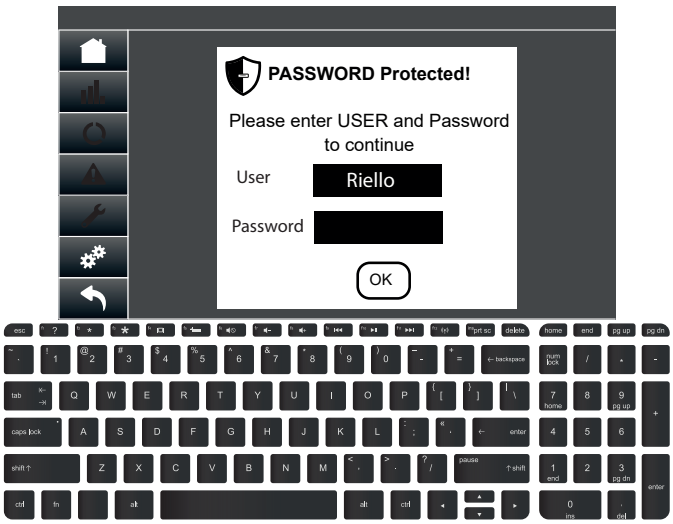

- Enter into the field password and digit the Riello password



- Press Enter.
- Select OK to validate.
- Press the DELETE GRAPH DATA button again.
- Confirm again if you want to delete the history and realtime graph data.

5.12 Boiler Screen

By pressing the BOILER button you access to the performance screen.

Through this screen, the following actions can be performed:

- Check the status of the boiler and modules (ON, OFF, error, service)
- Primary side Boiler setpoint
- DHW Setpoint set
- DHW supply temperature

Go back to the previous screen.

Boiler current error (only if the water heater has a locking or blocking error).

- Access the Module screen of the desired module, by touching its icon on the screen.

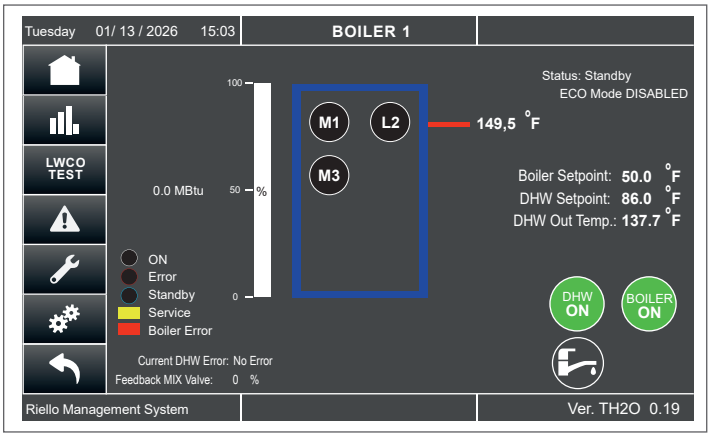

Fig. 48 *Boiler 1 screen*

Lx = Leading, it is the first module that starts working
Mx= Modules

The parameter 149 defines First Module to Start and establishes the number of the next module to be rotated (this value is automatically updated at each rotation).
The Lead module works till the time set in parameter 174 "Module rotation Interval". At the end the "lead" turns to the next Module.

Example:

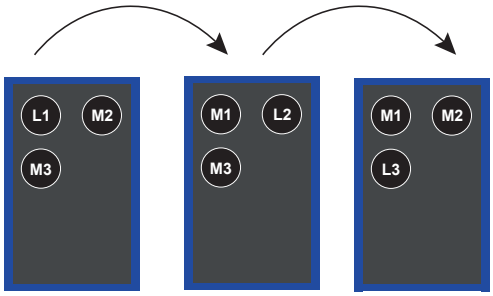

Module Screen

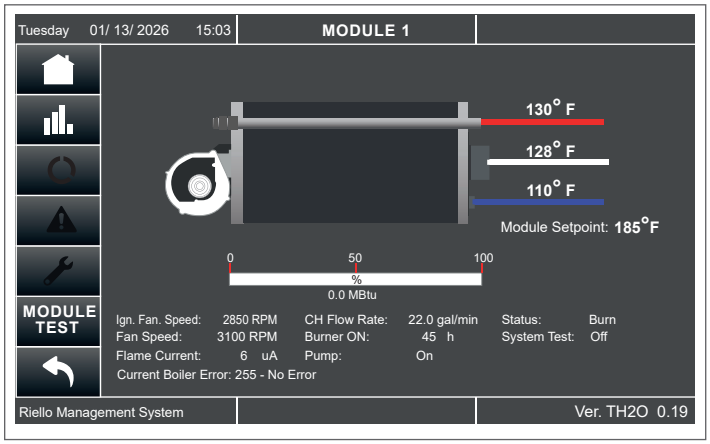

Fig. 49 *Module 1 screen*

Use the side buttons to perform the actions listed below:

- **Home button:** move back to the RIELLO screen;
- **Performance button:** move to the Performance screen of the module;
- **MODULE TEST button:** move to the Module test screen;
- **Back button:** move to the previous screen.

Module Test Screen

This screen is designed to support the installer and service activities, when pushing the MODULE TEST button on Module

screen, a new set of buttons appears on the left side of the screen.

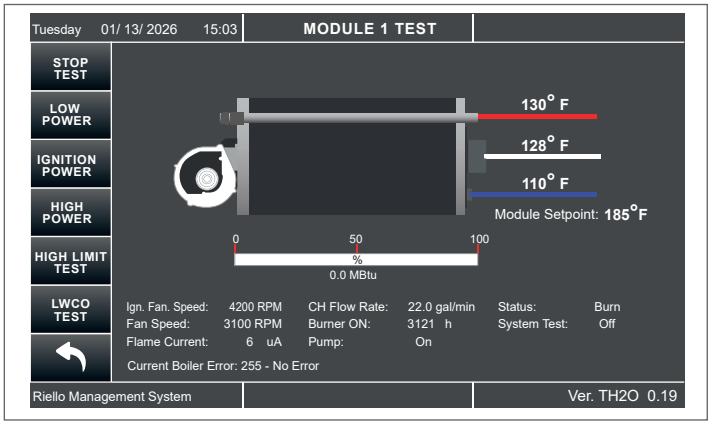

Fig. 50 *Module 1 Test screen*

Setup, adjustments and checks of combustion regulation can be done using the LOW POWER. IGNITION POWER and HIGH POWER BUTTONS.

In addition, the HIGH LIMIT button allows the inspector to carry out the high limit temperature switch functionality test.

LWCO button allows to simulate a low pressure in the system.

The test can be stopped with STOP TEST.

5.12.1 Boiler Error Screen

From Boiler screen, press ⚠ to see the list of the last 40 errors occurred on its own modules.
The errors are listed in chronological order, under two categories: Blocking errors (auto-reset) and Locking errors (manual reset).
Error history can be deleted only from PB display.

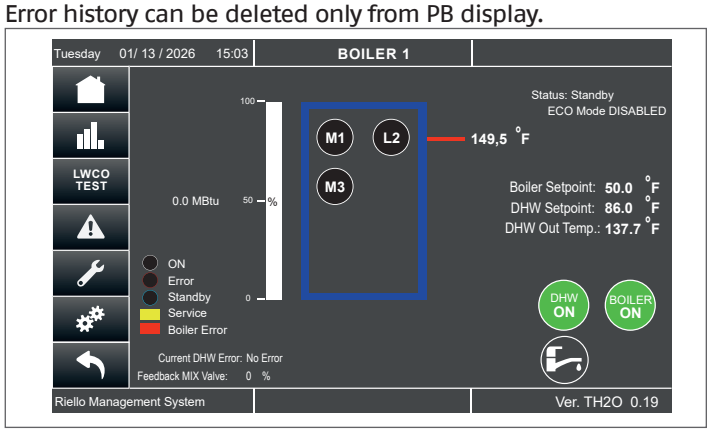

Fig. 51 *Boiler 1 screen*

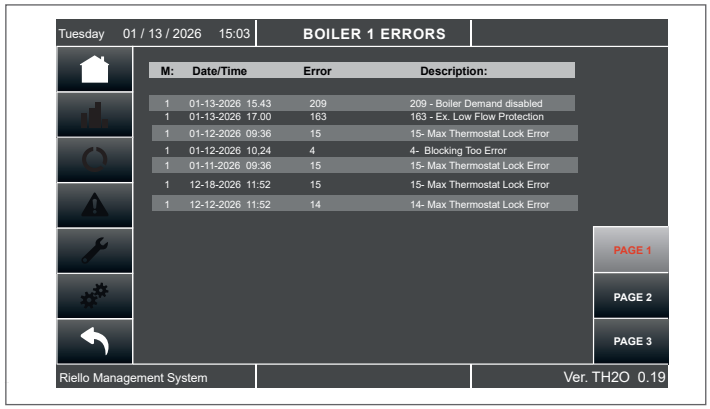

Fig. 52 *Boiler 1 errors screen*

5.12.2 Service Screen

From Boiler screen, tap 🔧.
The Service screen shows the main parameters of the Service Reminder function.

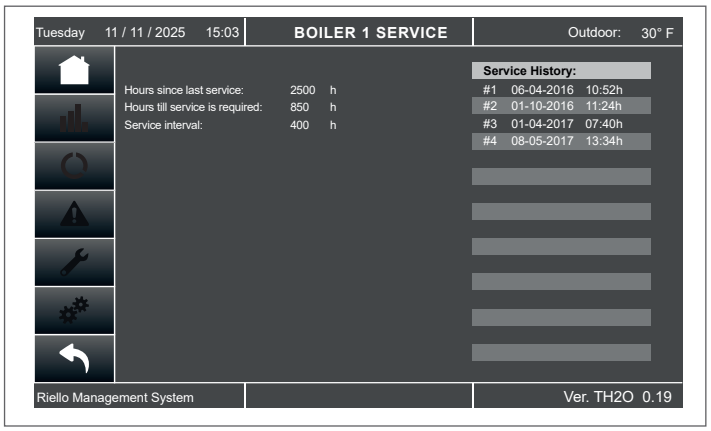

Fig. 53 *Boiler 1 service screen*

The **Service Reminder** will remind the owner/user of the appliance to service the appliance at a specified Service Interval (factory setting).

When service is not done within the specified time, a service reminder will be shown on the screen, alternating with the normal status display.

The **Service Interval** can be set as the number of burn hours or the number of operational (appliance is powered) hours. This can be done by setting the Service_Hour_Counter (factory) parameter.

When the Service Reminder is active, the time before service is actually done is logged by the 900PB (in hours). This time is called the Service Overdue time. With this log the factory can read back how long service was overdue on the system/appliance which can be useful when handling warranty claims.

For maintenance operation refer to the specific chapter APPENDIX A - Maintenance.

A maximum of 15 Service moments can be logged, when the log is full it will overwrite the oldest log entry.

Each time the Service Reminder is being reset, a new service moment is counted and the Service Overdue counter will be stored in the log/history.

5.12.3 PLC Error Screen

From the main screen press ⚠ to see the ist list of the last 20 errors occurred on the BOILER DHW.

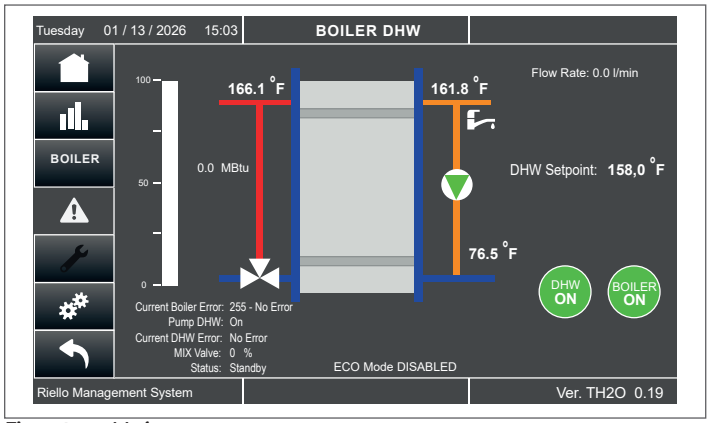

Fig. 54 *Main screen*

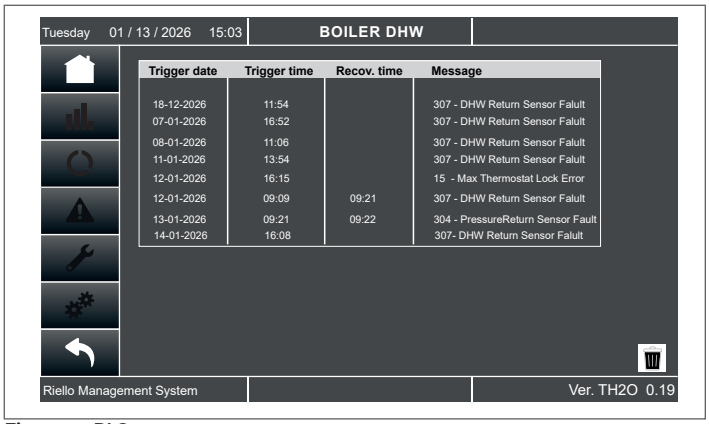

Fig. 55 *PLC errors*

5.12.4 Dirty Plate Detection

The **ARRAY TH20** is provided standard with two heat exchangers, which operate alternately to ensure efficient heat exchange to the domestic hot water side.

When there is no request for domestic hot water, the system checks the pressure difference on the exchanger. If this is higher than the set value, a warning on the Touchscreen appears and the domestic hot water circuit switches automatically to the other exchanger; the antilegionella automatically starts.

It is possible to switch manually from one exchanger to another pressing the button MANUAL CHANGE in the HEAT EXCHANGER (see chapter configure the appliance) .

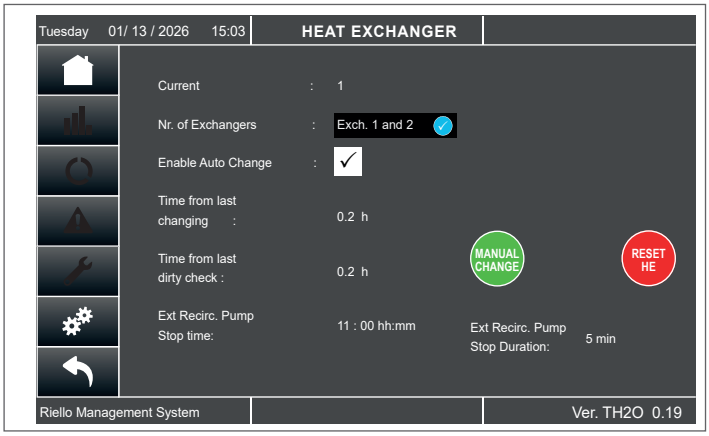

Fig. 56 *Heat exchanger DHW screen*

During heat exchanger maintenance, it is mandatory to disable the Auto Change.

NOTE: In the DHW plate EXCHANGER configuration page is it possible to choose the number of exchangers from the dropdown menu.

For example, if one exchanger is obstructed or has been disassembled for maintenance, it is possible to exclude it by selecting the other exchanger.

The window provides the following options:

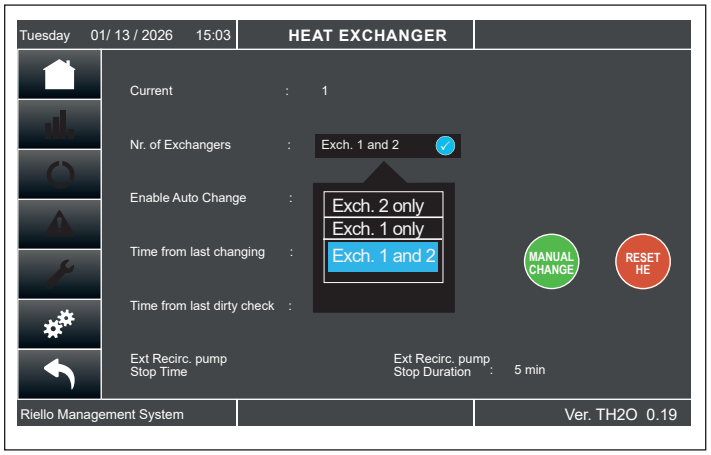

Fig. 57 *Selection of heat exchangers*

5.13 ECO MODE

During ECO mode, the boiler temperature is not maintained at a high level. Therefore, after several hours, the water temperature inside the boiler may become very low, depending on the ambient temperature. **Consequently, the time required for the boiler to reach the desired temperature again can vary significantly, depending on both the required heating power and the current water temperature**

From SETTINGS screen, tap the ECO MODE button.

Select Enable to activate the ECO Mode function.

When the function is active every day, during the assigned time slot set, the boiler works under these conditions:

A. in the absence of withdrawal (inlet water flow <2.64 gpm (10l/min):
   a. The external recirculation pump is OFF
   b. mixing valve closed
   c. internal recirculation pump OFF.
   d. 2 Vdc primary setpoint 50°F (10°C).

B. in presence of withdrawal (inlet water flow >2.64 gpm) (10l/min)
   a. it works normally.

This function reduces gas and electricity consumption, but it results in slightly slower response to DHW demand in respect to standard operation.

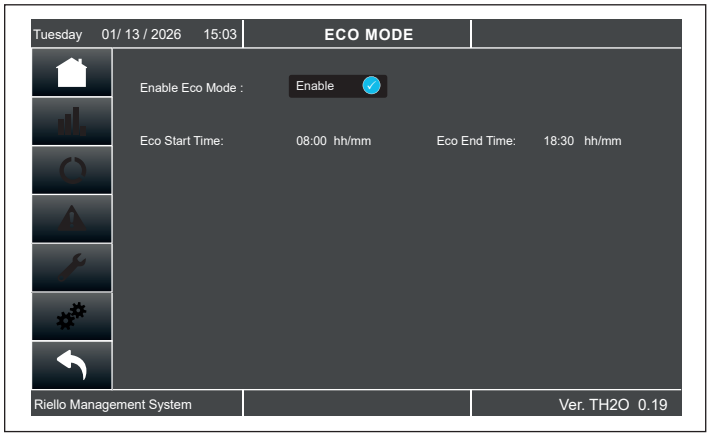

Fig. 58 *ECO MODE*

If ECO MODE function is enabled and during the programmed time slot, the BOILER DHW screen displays the message "ECO MODE ENABLED".

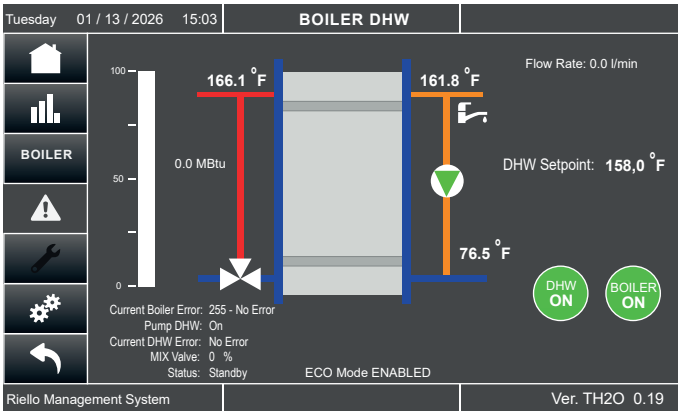

Fig. 59 *ECO MODE ENABLED*

5.14 External recirculation pump config

To ensure optimal control (energy savings), the boiler allows management of the timed shutdown of an external recirculation pump, if present.
The time can be set on the HEAT EXCHANGER page using the following parameters:
Customer Pump Stop Time
Customer Pump Stop Duration

NOTE: the output forces the shutdown of the external pump, thus enabling the use of the Dirty Plate Detection function.

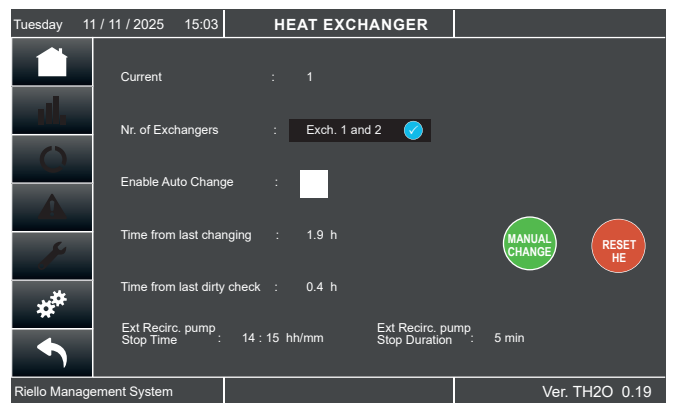

Fig. 60 *Customer pump Stop time - Duration*

5.15 INFO

From SETTINGS screen, tap the INFO button to have access to the info displayed on the screen below.

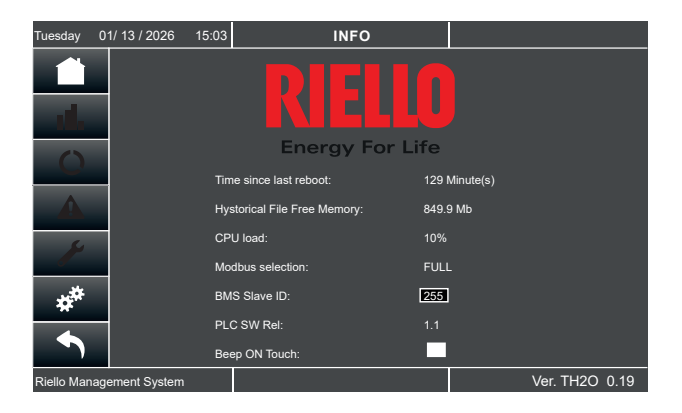

Fig. 61 *INFO*

6 SHUTDOWN

CAUTION: Risk of system damage through frost.

When there is a frost, the heating system can freeze up if it is not operational, e.g. because of a fault shutdown.
- When there is a risk of frost, protect your heating system against freezing up.
- If your heating system has been shut down for several days due to a fault shutdown and there is a risk of frost, drain the heating water at the drain & fill valve. Also leave the air vent valve at the highest point in the system open.

NOTICE: Risk of system damage through frost.

The heating system can freeze up as a result of a power failure or if the power has been switched off.
- Check the "Control unit settings" to ensure the system remains operational (especially when there is a risk of frost).

NOTICE:
- Always keep the gas supply valve shut off if the burner is shut down for an extended period of time.

6.1 Shutting Down the Heating System

Shut down your heating system via the control unit. Switching off the control unit also switches off the burner automatically.
- Set the On/Off switch of the control unit to Off.
- Isolate the fuel supply to the burner.

6.2 Shutting Down the Heating System in an Emergency

Only in emergencies, switch OFF the heating system via the boiler room breaker or the heating system emergency stop switch.
- In dangerous situations, immediately close the main fuel shut-off valve and the power supply of the heating system via the boiler room main breaker or the heating system emergency stop switch.
- Isolate the fuel supply to the burner.
- Never put your life at risk. Your own safety is paramount.

7 ENVIRONMENTAL PROTECTION/DISPOSAL

Environmental protection is one of the fundamental company policies of the RIELLO. We regard quality of performance, economy and environmental protection as equal objectives.
Environmental protection laws and regulations are strictly adhered to.
To protect the environment we use the best possible technology and materials taking into account economic points of view.
Packaging
For the packaging we participate in the country-specific recycling programs, which guarantee optimal recycling. All packaging materials used are environmentally-friendly and recyclable.

Old appliances
Old appliances contain resources that should be recycled.
The components are easy to separate and the plastics are marked. This allows the various components to be sorted for appropriate recycling or disposal.



8 WIRING DIAGRAMS

WIRING DIAGRAM SUPPLY LEFT – 1000

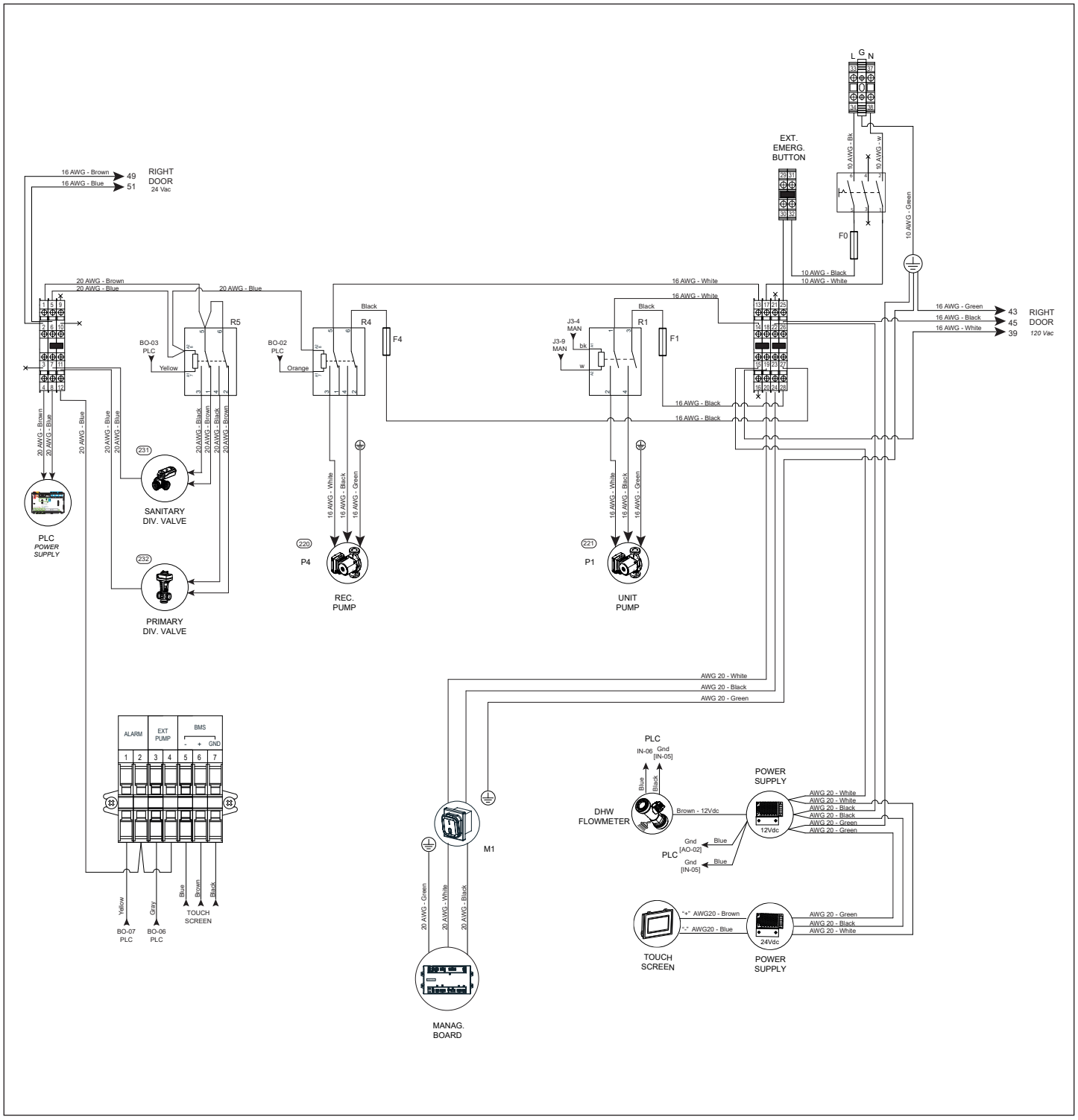

WIRING DIAGRAM SUPPLY LEFT – 1500

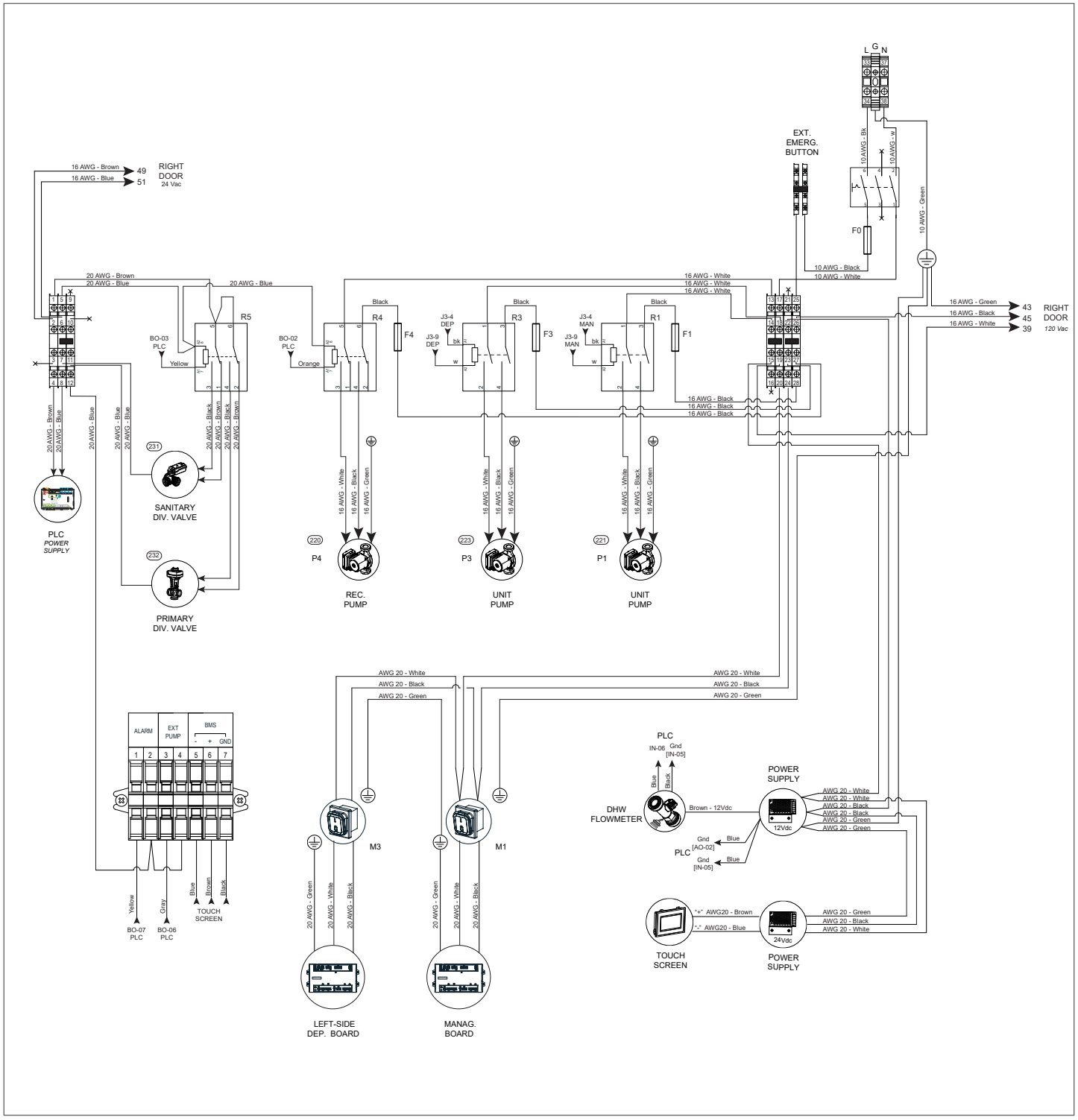

WIRING DIAGRAM SUPPLY RIGHT 1000 – 1500

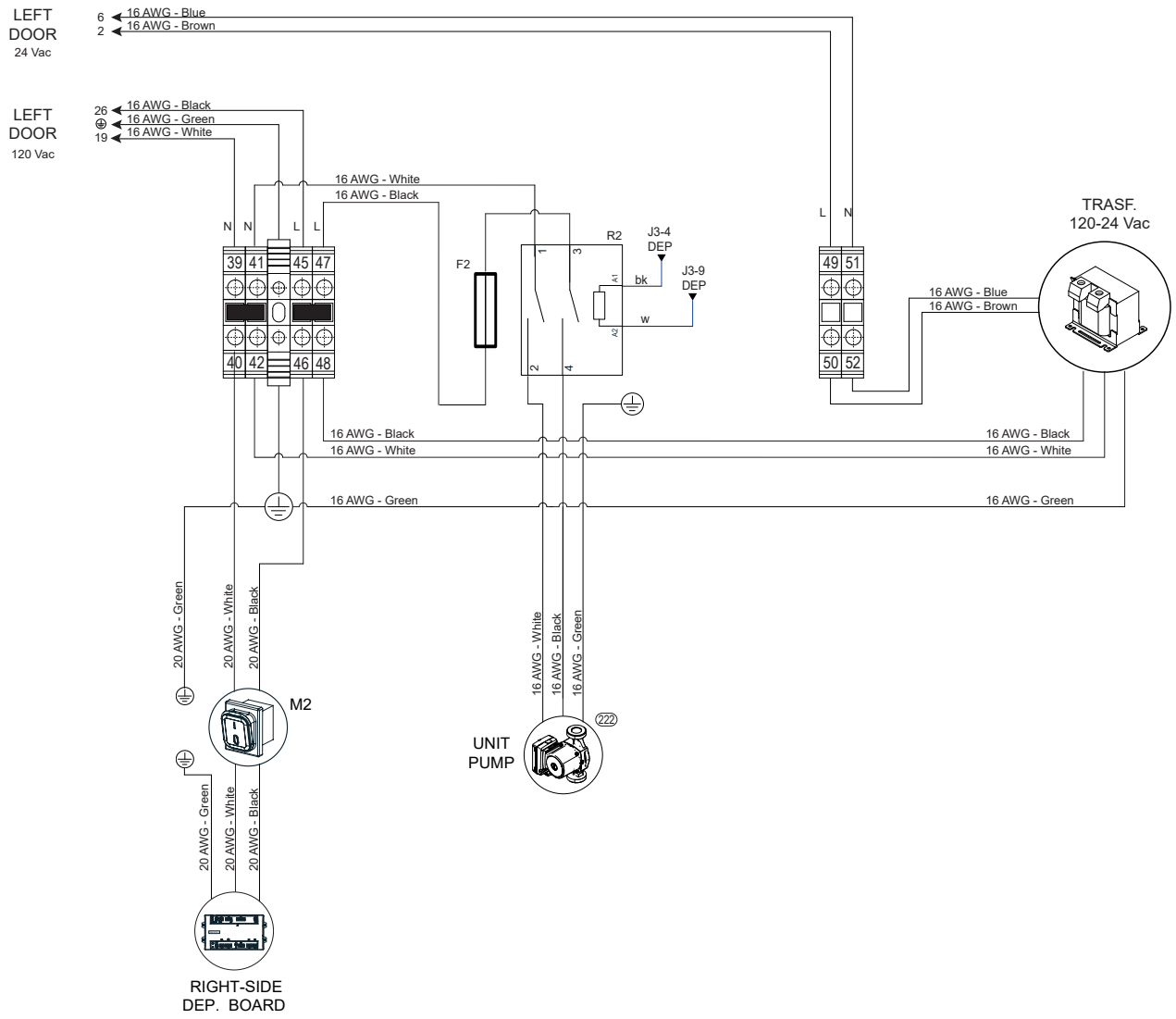

WIRING DIAGRAM – MANAGING 1000

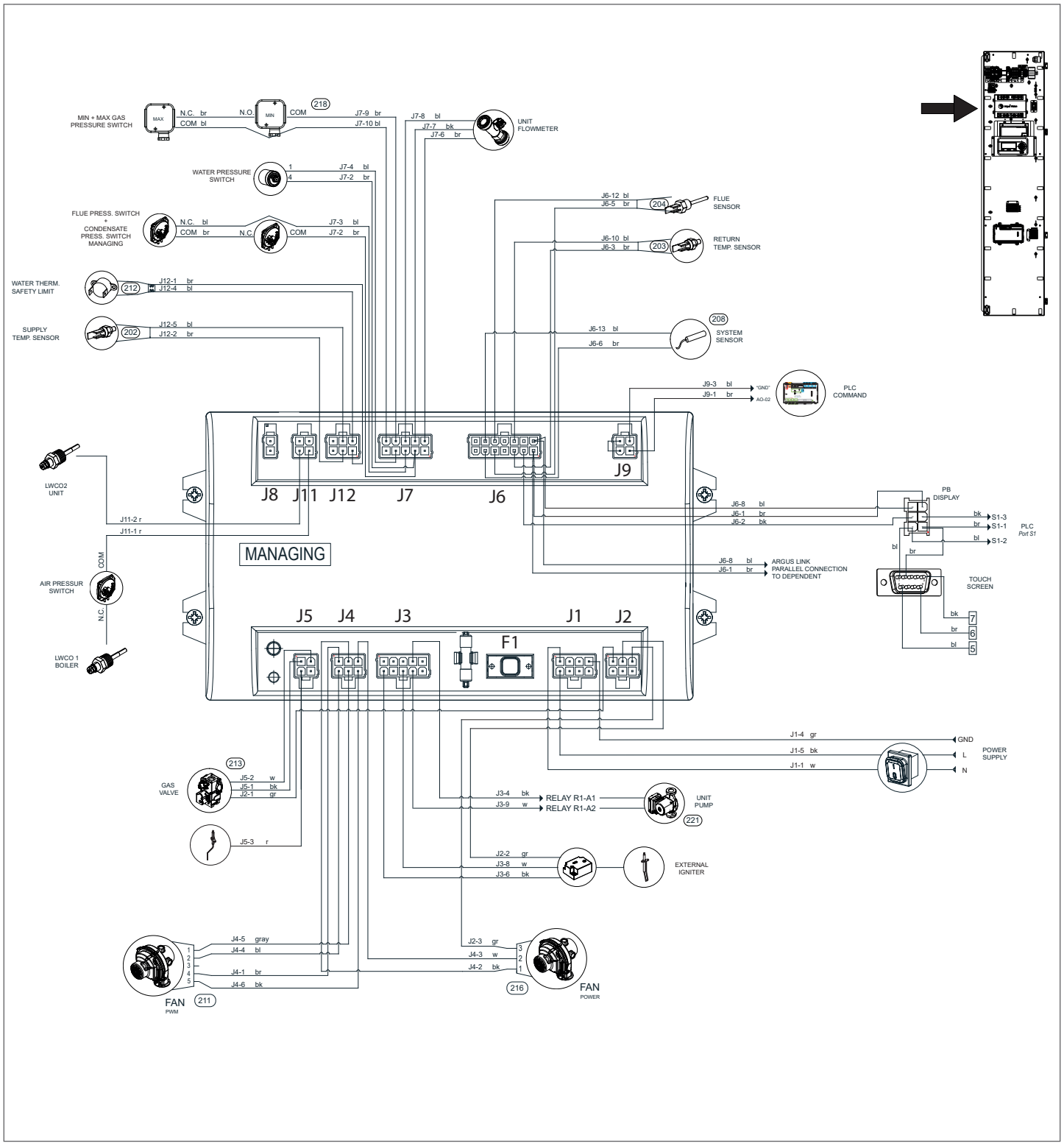

WIRING DIAGRAM – MANAGING 1500

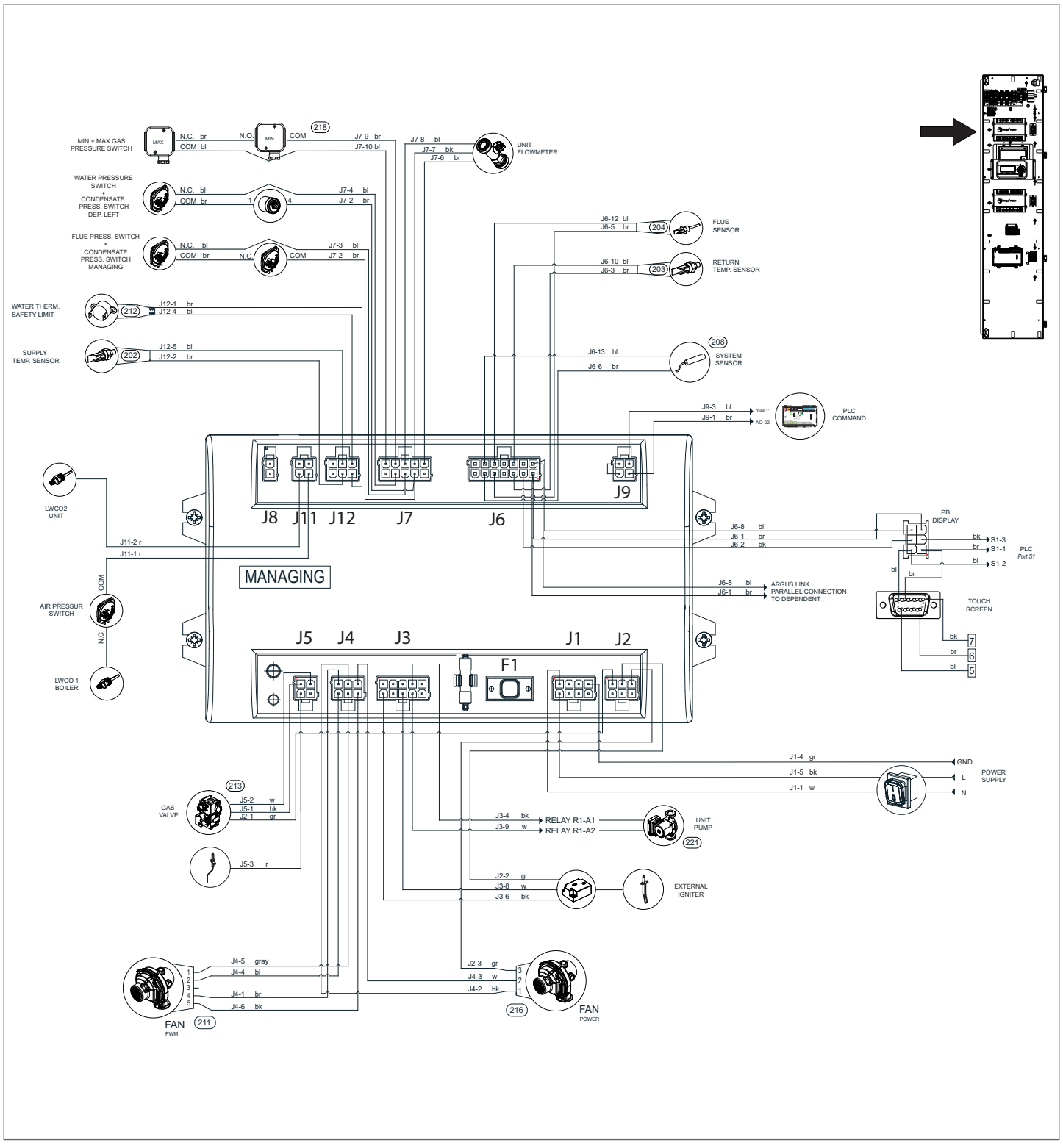

WIRING DIAGRAM DEPENDENT LEFT 1500

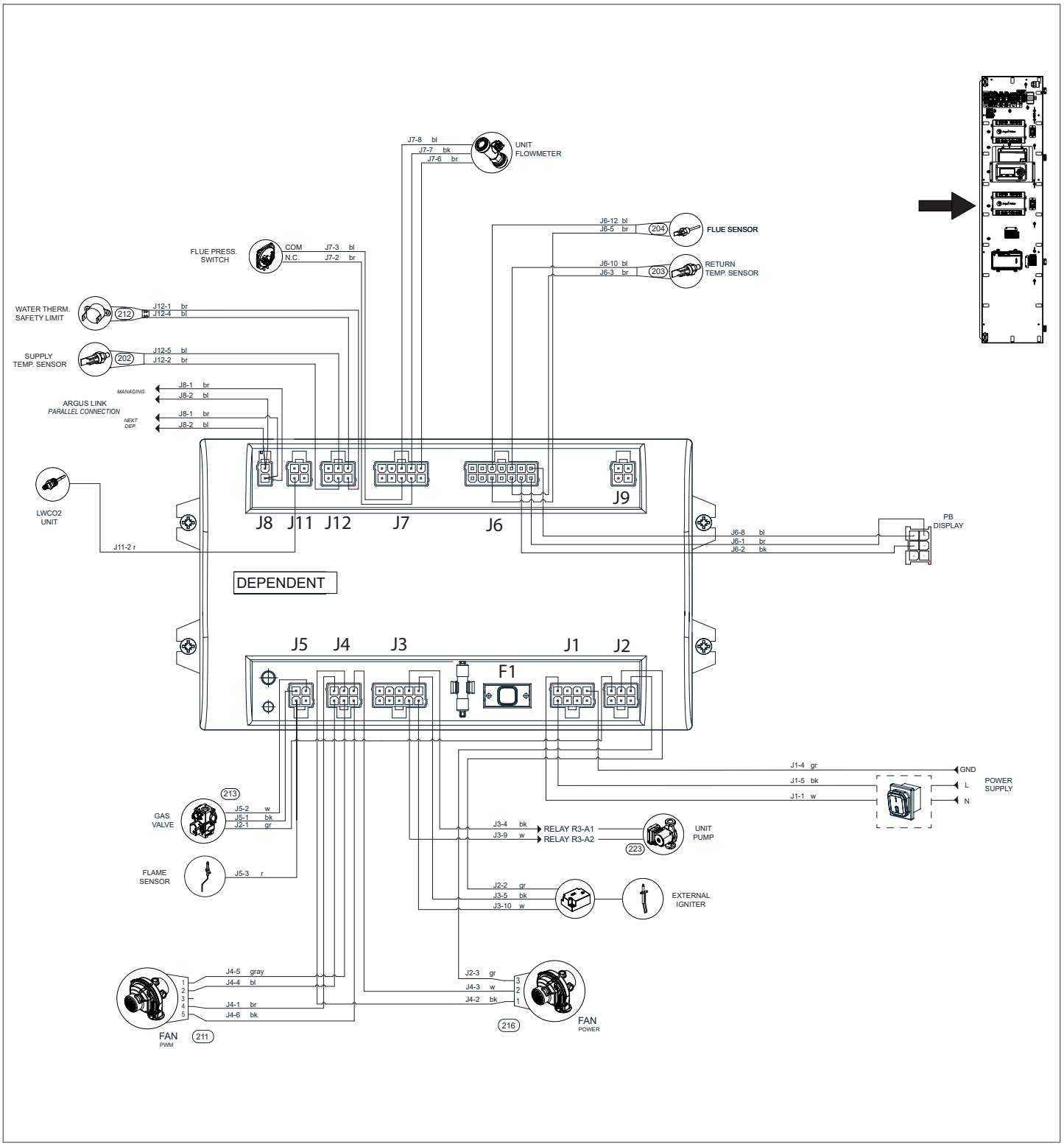

WIRING DIAGRAM DEPENDENT RIGHT 1000 – 1500

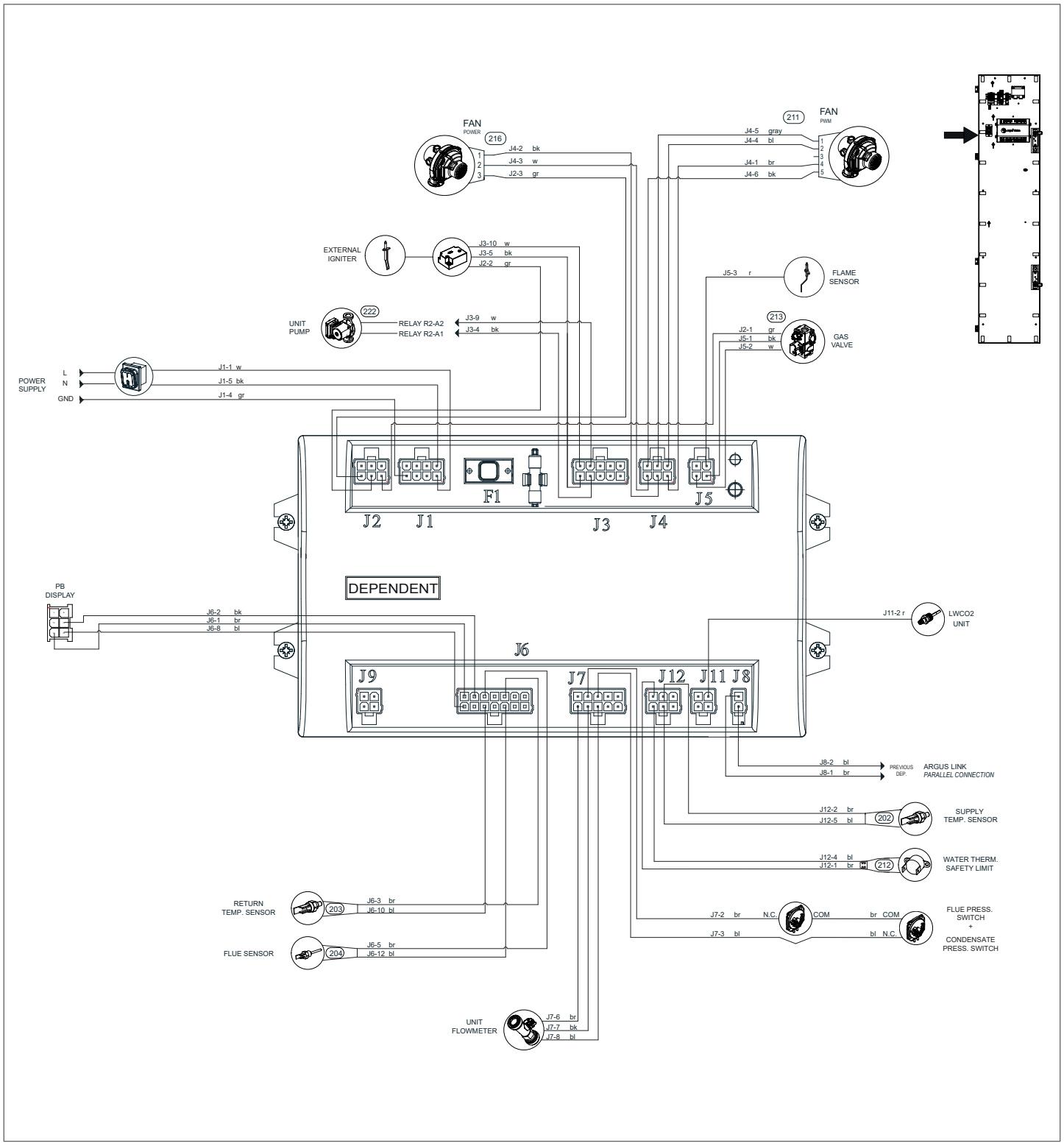

WIRING DIAGRAM TH20 1000 – 1500 PLC

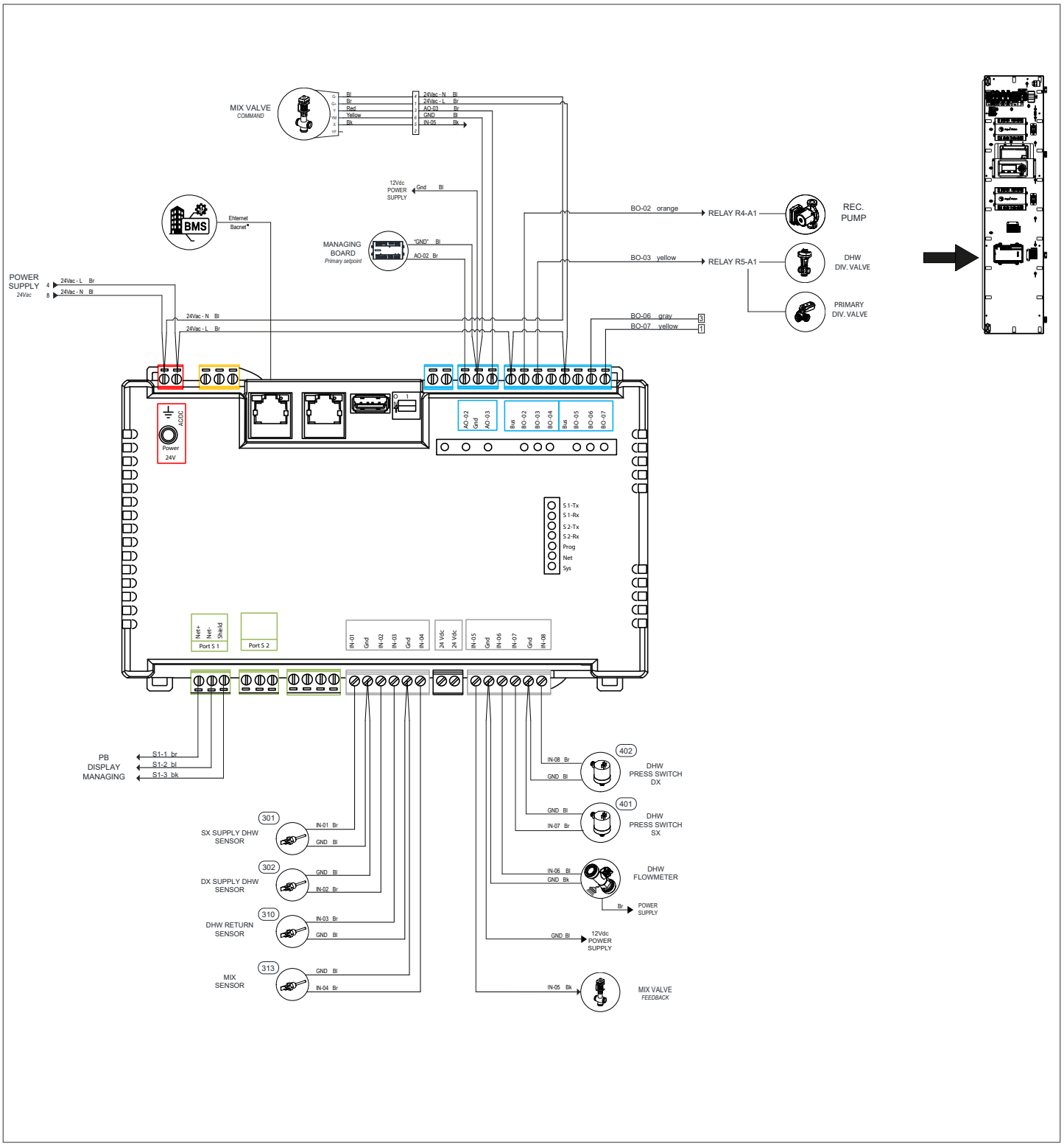

APPENDIX A – MAINTENANCE

A qualified and adequately trained technician must perform the inspection as specified in these instructions at the beginning of the season and at regular intervals.
Servicing, inspection and adjustment must be done by a trained technician in accordance with all applicable local and national codes.
WARNING: Improper servicing or adjustment could damage the instantaneous water heater and result in equipment damage or a dangerous condition

MAINTENANCE/INSPECTION SCHEDULE

Time interval	Maintenance
Monthly (follow local, state, federal or local authority having jurisdiction guidelines)	Verify the condensate discharge system
Every two months	Test low water cut off
Every two months	Inspect and test the reset button of low water cut off
Every six months	Check piping (gas) for leaks
Every six months	Check water piping
End of heating season	Shut off the instantaneous water heater
Annually	Verify the cleanliness of the area around the instantaneous water heater
Annually *	Check ignition electrode
Annually *	Clean the combustion chamber (including the burner tube)
Annually *	Inspect the burner gasket
Annually	Check vent piping and verify if leaks or obstructions are present
Annually	Check air piping and verify if leaks or obstructions are present
Annually *	Clean condensate discharge
Annually	Check the pressure of the hydraulic system
Annually *	Check for gas piping leak
Annually *	Check wiring and connections
Annually *	Check temperature sensor and flowmeter
Annually *	Check relief valve
Annually *	Safety block check, modulation range check, gas valve closing after burner stop
Annually *	Check control parameters
Annually *	Verify startup
Annually *	Combustion test and analysis
Annually *	Verify the flame stability and signal strength
Annually*	Cleaning of the DHW plate exchangers or more often if required (see error number 304-303)

(*) Annually or every 2000 hours, whichever occurs first.

WET CLEANING THE HEAT EXCHANGER

⚠ **CAUTION:** property damage and/or personal injury from unsuitable cleaning agent!
Unsuitable cleaning agent with flammable components may explode and/or cause burns.
Do not use cleaning agent with flammable propellants.

The following components must be replaced after the specified service life has expired.

Components	Replace according to the specification depending on what occurs first	
	Replace after service life of "x" years	Replace after y water heater starts
Air/ratio control valve including gaskets	10	500,000

The replacement intervals specified are instructions of the component manufacturer and serves to ensure the long technically flawless state and high utilisation rate of the system.

INSPECTION OF IGNITION ELECTRODE
Verify that the electrode is clean of deposits and use a dollar bill or other material to remove deposits as required.

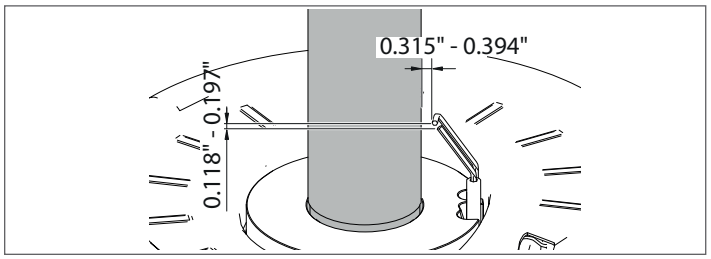

Fig. 62 *Inspection of ignition electrode*

WATER QUALITY
Check water quality according to 4.6 Water Quality Guidelines Primary side.

WATER FLOW
Verify the check valves functionality. It is possible to do it, without removing them, using the following procedure:
- Assuming both modules of the instantaneous water heaters are in standby, start one of them;
- Check the water flow of the Off module on its module screen;
- If the value is lower than 3 l/min (0.8 GPM), check valve is OK;
- If it is higher, remove the valve and check/clean it;
- Repeat the same procedure for the other module.

⚠ **CAUTION**: Label all wires prior to disconnection when servicing controls. Wiring errors can cause improper and dangerous operation. Verify proper operation after servicing.

⚠

Gas Leak Inspection
Inspect all gas piping and gas valve especially pressure inlet to confirm there are no leaks.

⚠ **DANGER**: To verify the gas leaks use a soap solution or a gas leak detector. Do not use matches, candles, or other methods that can cause a fire or explosion!

CHECK EXHAUST AND COMBUSTION AIR PIPE SYSTEM
Clear vent systems of any obstructions, corrosion, physical damage, water stains and rust. Verify the connection between the individual components.
Verify the outside terminations are clear. Clean the screens and the louvers if there is any debris.

INSPECTION OF IGNITION ELECTRODE AND IONIZATION ELECTRODE
Verify that the electrode is clean of deposits and use an emery cloth or other material to remove deposits as required.

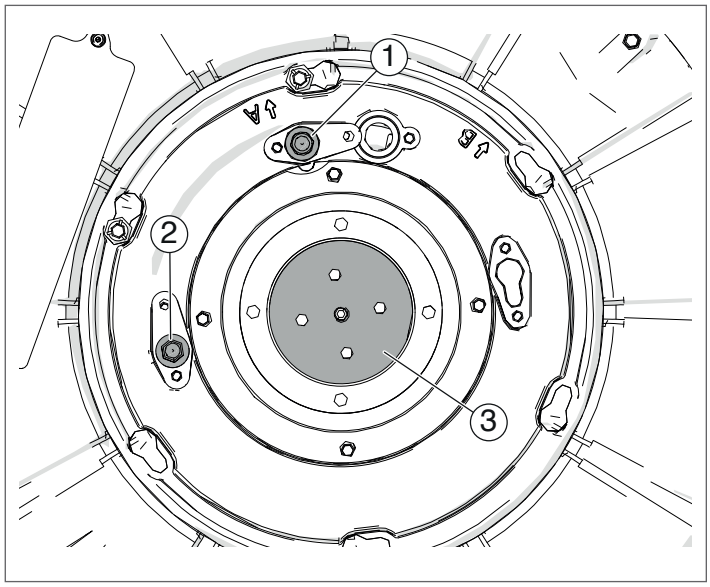

Fig. 63 *Inspection of ignition electrode and ionization electrode*

No.	Description
1	Ignition electrode
2	Ionization electrode
3	Burner tube

CHECK WIRING AND CONNECTIONS
Check that all wiring is securely fastened and in good condition without cracks, insulation damage or corrosion on the metallic contacts.

BURNER GASKET INSPECTION
To ensure the reliability of the instantaneous water heater / system, the instantaneous water heater must be maintained as outlined in this manual and a qualified service technician must startup and service it at least annually.
This includes a combustion test and the cleaning of the combustion chamber.
When disassembling the heat exchanger it is crucial to inspect the Burner Gasket (part number 0CR105917) for damage.
It is a must to replace the burner gasket when servicing and if there are any signs of wear, deformation or discoloration of the gasket and in any case not later than every two years.

CLEANING THE EXCHANGER

Methode 1) Cleaning the heat exchanger by removing it
On the HEAT EXCHANGER screen select the exchanger you don't need to clean, by selecting it in the "N of Exchangers". field. This causes the diverting valve to switch to the selected heat exchanger.

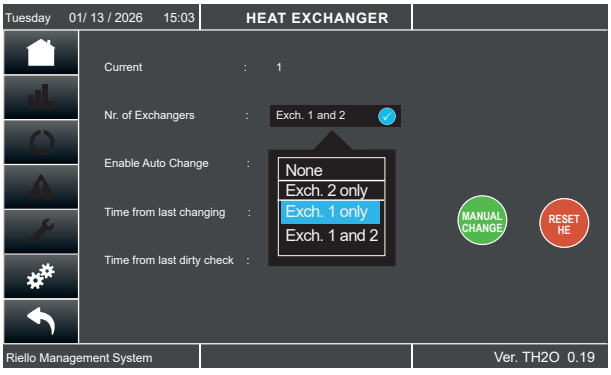

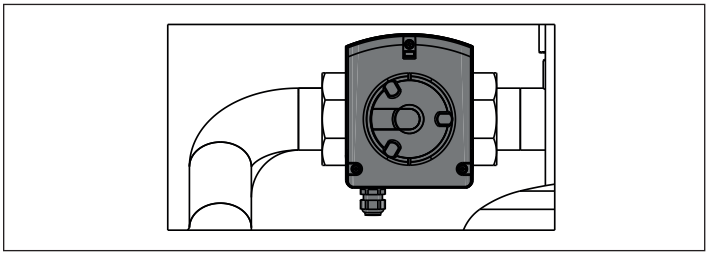

IMPORTANT: The "Enable Auto Change" option must be disabled.



a. Close the manual valve by turning the handle to the vertical position.

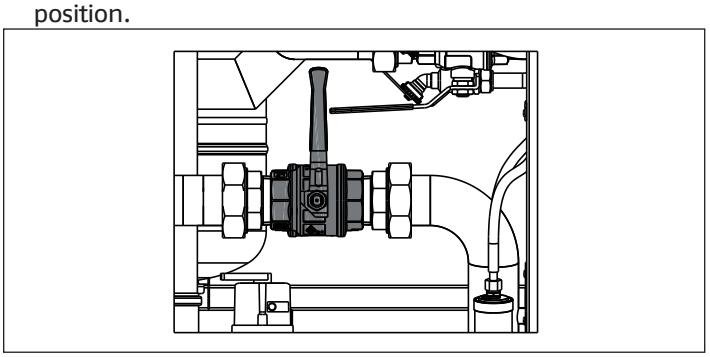

b. Open the lower tap (DHW side) to empty the heat exchanger

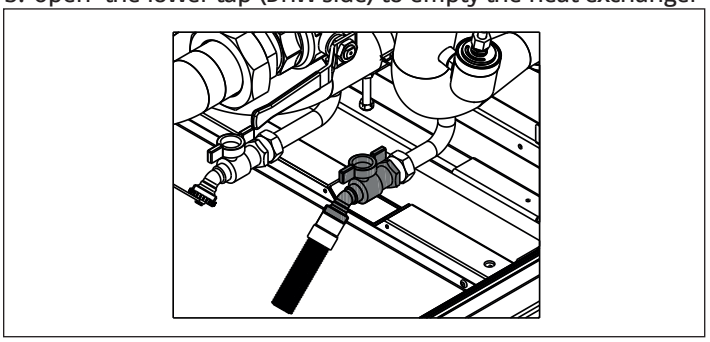

c. Close the manual valve on the primary side

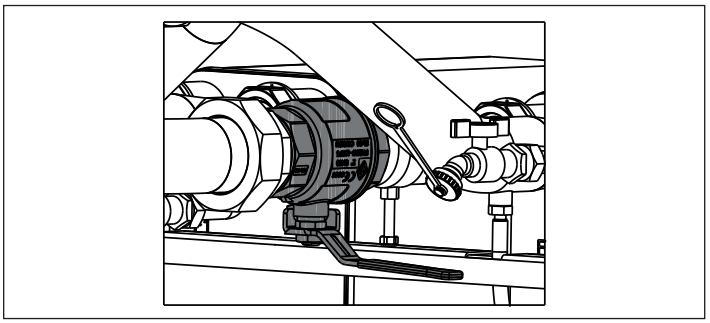

d. Open the corresponding drain valve to empty the circuit.

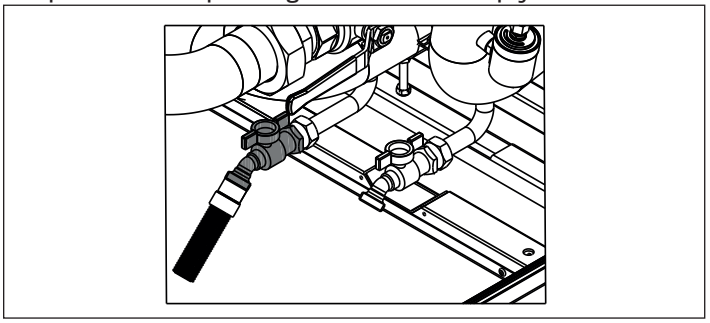

e. Remove the fixing nuts and withdraw the heat exchanger.

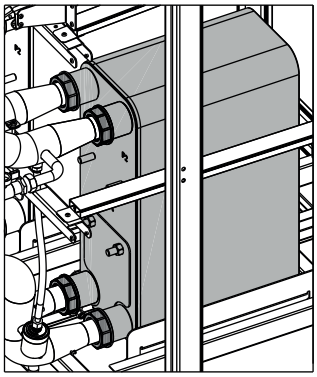

f. Perform the cleaning operation.

⚠ Use only appropriate cleaning and descaling materials for heat exchanger cleaning operations to avoid damage to the components.

⚠ Do not use metal tools, abrasive brushes, or high-pressure water jets that could damage the heat exchanger surfaces.

⚠ Prevent dust, cleaning residues, or foreign matter from entering the heat exchanger during cleaning and maintenance operations.

Perform the assembly procedure:

- insert the heat exchanger ensuring that it is correctly repositioned,
- fix the heat exchanger with the previously removed nuts
- closed the drain valves
- open the manual valve on the primary side
- Close the lower tap (DHW side)
- Open the manual valve by turning the handle to the horizontal position.
- Refill the primary circuit
- On the heat exchanger screen select the N. of heat exchangers (Exch 1 and Exch 2) and enable the auto exchange.

METHODE 2) On-site heat exchanger cleaning

Repeat steps a – b – c

Perform the cleaning procedure through the two taps (DHW side) of the exchanger.

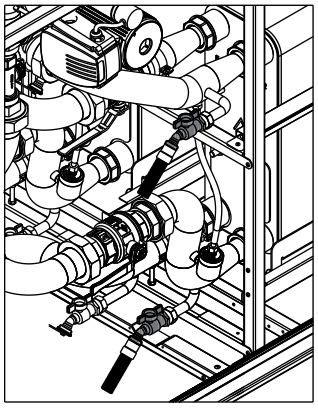

⚠ Use only appropriate cleaning and descaling materials for heat exchanger cleaning operations to avoid damage to the components.

⚠ Do not use metal tools, abrasive brushes, or high-pressure water jets that could damage the heat exchanger surfaces.

⚠ Prevent dust, cleaning residues, or foreign matter from entering the heat exchanger during cleaning and maintenance operations.

Perform the assembly procedure

- Close the lower tap (DHW side)
- Open the manual valve by turning the handle to the horizontal position.
- On the heat exchanger screen select the N. of heat exchangers (Exch 1 and Exch 2) and enable the auto exchange.

APPENDIX B – TROUBLESHOOTING TABLE

LOCKOUT CODES

Error no.	Error	Description	Checks	Solutions
0	E2PROM_READ_ERROR	Internal software error		Control board replacement
1	IGNIT_ERROR	Three unsuccessful ignition attempts in a row	a- Check gas supply pressure; b- Check spark and ignitor rod. c- Correct amount of air; d-Check for 120VAC at the gas valve. e- Ensure that the gas valve is functioning properly by checking for changes in gas pressure.	a- If the gas supply pressure is incorrect, it must be adjusted to the correct pressure; b- If spark is not present check for correct ignition electrode position; c- If the combustion air pressure is incorrect, inspect the vent system and eliminate any obstructions; d- If the voltage to the gas valve is not 120Vac the power control board must be replaced.
2	GV_RELAY_ERROR	Failure detected in the GV (Gas Valve) relay	a- Check the integrity of the wire connections between gas valve and control board.	a- If wires are damaged, replace them b- If wires are ok, replace the gas valve or the power control board.
3	SAFETY_RELAY_ERROR	Internal control board error		a- If the error occurs during boiler normal operation, replace the Control board b- If the error occurs at the electrical switching on (by main switch) of the boiler, check high sensor limit (and its wiring) integrity
4	BLOCKING_TOO_LONG	Control had a blocking error for more than 20 hours. This error is caused when any Blocking errors occur and are not corrected automatically. Therefore it causes a Locking error.	a- Press RESET button to display the Blocking error description b- Check error log on touchscreen. c- The blocking error that occurred previous to current locking error will be the cause (i.e.- 163 LowExFlow).	Remove the cause of the Blocking error
5	FAN_ERROR_NOT_RUNNING	Fan is not running after 60 seconds.	a- Check for 120 VAC power connection of the fan. b- Check PWM connection of the fan.	a- If no 120 VAC voltage is present, replace the power control board; b- If no PWM signal is present, replace power control board; c- Replace the fan.
6	FAN_ERROR_TOO_SLOW	Fan runs too slow for more than 60 seconds		
7	FAN_ERROR_TOO_FAST	Fan runs too fast for more than 60 seconds		
8	RAM_ERROR	Internal software error		Control board replacement
9	WRONG_E2PROM_SIGNATURE	Contents of E2PROM are not up to date		Control board replacement
10	E2PROM_ERROR	Wrong safety parameters in E2PROM		Control board replacement
11	STATE_ERROR	Internal software error		Control board replacement
12	ROM_ERROR	Internal software error		Control board replacement
13	APS_NOT_OPEN	Air pressure switch not working		
14	APS_NOT_CLOSED	Air pressure switch not working		

Error no.	Error	Description	Checks	Solutions
15	MAX_TEMP_ERROR	The external overheat protection is enabled or the High limit sensor measures a temperature of over 95°C (203°F)	a- Check module water temp. b- Check the pump to verify the flow circulation; c- Check if the valves on hydraulic circuit are open; d- Check the high limit switch.	a- Change the pump or restart it; b- Open the valves on hydraulic circuit; c- Change the high limit switch.
16	FLUE_GAS_ERROR	Flue temperature exceeded the maximum allowable flue temperature		
17	STACK_ERROR	Internal software error		Control board replacement
18	INSTRUCTION_ERROR	Internal software error		Control board replacement
19	ION_CHECK_FAILED	Internal software error		Control board replacement
20	FLAME_OUT_TOO_LATE	Flame still present 10 seconds after closing the gas valve		Replace the gas valve
21	FLAME_BEFORE_IGNIT	Flame is detected before ignition		Replace the gas valve
22	TOO_MANY_FLAME_LOSS	Three flame failures during one demand cycle	a- Check the integrity of the wire connections of the spark and the earth on heat exchanger b- check ionization signal while running	a- If wires are damaged, replace them b- check for proper combustion settings - if correct replace spark/flame rod.
23	CORRUPTED_ERROR_NR	Error code RAM byte was corrupted to an unknown error code		
24	FLUE_SWITCH_NOT_CLOSING	The blocked flue sensor is not closed within 10 minutes		
29	PSM_ERROR	Internal software error		
30	REGISTER_ERROR	Internal software error		Control board replacement
33	LWCO_1_ERROR	Low Water Cut-Off 1 error	a- Check to ensure all valves are open, pump is running. b- Check the wiring between the controller and the LWCO probe.	a- Verify water is in the boiler. b- Verify good connection between control module and low water probe.
34	LWCO_2_ERROR	Low Water Cut-Off 2 error	a- Check to ensure all valves are open, pump is running. b- Check the wiring between the controller and the LWCO probe.	a- Verify water is in the boiler. b- Verify good connection between control module and low water probe.
35	GAS_PRESSURE_ERROR	Gas pressure switch is closed. This can either be the High or Low Gas Pressure Switch.	a- Check gas pressure to ensure it is steady and within the recommended range for the unit. b- Check with as many modules on as possible to ensure supply connections are sized properly.	
36	AIR_DAMPER_LOCKING	Air Damper feedback is not received when the relative output is open for the fourth time.		
37	FLUE_PRESSURE_LOCKING	Flue pressure switch is closed for the fourth time.	a- Check for obstruction in the flue piping. b- Blocking errors should be recorded prior to the occurrence of this Locking error. c- Check for condensate in the hose connecting the flue pressure switch to ensure it isn't blocked.	

BLOCKING ERRORS

Error no.	Error	Description	Checks	Solutions
100	WD_ERROR_RAM	Internal software error		Control board replacement
101	WD_ERROR_ROM	Internal software error		Control board replacement
102	WD_ERROR_STACK	Internal software error		Control board replacement
103	WD_ERROR_REGISTER	Internal software error		Control board replacement
104	HIGH_LIMIT_FAIL	Physical high limit test failed		Control board replacement
106	REFHI_TOO_HIGH	Internal software error		Control board replacement
107	REFHI_TOO_LOW	Internal software error		Control board replacement
108	REFLO_TOO_HIGH	Internal software error		Control board replacement
109	REFLO_TOO_LOW	Internal software error		Control board replacement
110	REFHI2_TOO_HIGH	Internal software error		Control board replacement
111	REFHI2_TOO_LOW	Internal software error		Control board replacement
112	REFLO2_TOO_HIGH	Internal software error		Control board replacement
113	REFLO2_TOO_LOW	Internal software error		Control board replacement
114	FALSE_FLAME	Flame is detected in a state in which no flame is allowed to be seen		Control board replacement
115	LOW_WATER_PRESSURE_ERROR	Low water pressure error	a- Check system water pressure. b- Ensure that it is above min. recommended pressure (7.5PSI). c- Check the value of the reading of this sensor in the info screen. If the value is not in line with the system pressure check the sensor.	
116	LOW_WATER_PRESSURE_SENSOR	Low water pressure		
117	BLOCKED_DRAIN	Blocked drain switch is active		
118	WD_COMM_ERROR	Watchdog communication error		Control board replacement
119	RETURN_OPEN	Return sensor open	a- Check the integrity of the wire connections; b- Check the return temperature sensor.	a- If the wiring is damaged, replace it; b- Verify that the temperature sensor has the correct resistance values. If values are incorrect sensor must be replaced.
120	SUPPLY_OPEN	Supply sensor open	a- Check the integrity of the wire connections; b- Check the supply temperature sensor.	a- If the wiring is damaged, replace it; b- Verify that the temperature sensor has the correct resistance values. If values are incorrect sensor must be replaced.
122	DHW_OPEN	DHW sensor open	a- Check the integrity of the wire connections; b- Check the DHW temperature sensor.	a- If the wiring is damaged, replace it; b- Verify that the temperature sensor has the correct resistance values. If values are incorrect sensor must be replaced.
123	FLUE_OPEN	Flue sensor open		
125	OUTDOOR_OPEN	Outdoor sensor open	a- Check the integrity of the wire connections; b- Check the Outdoor temperature sensor.	a- If the wiring is damaged, replace it; b- Verify that the temperature sensor has the correct resistance values. If values are incorrect sensor must be replaced.

Error no.	Error	Description	Checks	Solutions
126	RETURN_SHORTED	Return sensor shorted	a- Check the integrity of the wire connections; b- Check the return temperature sensor.	a- If the wiring is damaged, replace it; b- Verify that the temperature sensor has the correct resistance values. If values are incorrect sensor must be replaced.
127	SUPPLY_SHORTED	Supply sensor shorted	a- Check the integrity of the wire connections; b- Check the supply temperature sensor.	a- If the wiring is damaged, replace it; b- Verify that the temperature sensor has the correct resistance values. If values are incorrect sensor must be replaced.
129	DHW_SHORTED	DHW sensor shorted	a- Check the integrity of the wire connections; b- Check the DHW temperature sensor.	a- If the wiring is damaged, replace it; b- Verify that the temperature sensor has the correct resistance values. If values are incorrect sensor must be replaced.
130	FLUE_SHORTED	Flue sensor shorted	a- Check the integrity of the wire connections; b- Check the Outdoor temperature sensor.	a- If the wiring is damaged, replace it; b- Verify that the temperature sensor has the correct resistance values. If values are incorrect sensor must be replaced.
132	OUTDOOR_SHORTED	Outdoor sensor shorted	a- Check the integrity of the wire connections; b- Check the Outdoor temperature sensor.	a- If the wiring is damaged, replace it; b- Verify that the temperature sensor has the correct resistance values. If values are incorrect sensor must be replaced.
133	RESET_BUTTON_ERROR	Too many resets in a short time period		
135	T_EXCHANGE_BLOCK_ERROR	Exchange temperature exceeded 194°F (90°C)		
141	T_SELECTION3_OPEN	Selection 3 sensor open		
142	T_OPTIONAL1_OPEN	Optional 1 sensor open		
143	T_OPTIONAL2_OPEN	Optional 2 sensor open		
144	T_AMBIENT_OPEN	Ambient sensor open		
145	T_CHIMNEY_CLOSED	Chimney sensor shorted		
155	FLUE_PRESSURE_ERROR	Flue pressure switch is open	a- Check flue for obstructions. Clear if found. b- Check flue pressure to ensure flue has been installed and sized properly. c- Flue pressure switch default to 2.2 in. wc.	a- Remove any obstructions from the exhaust system; b- Remove any obstruction from condensate discharge and confirm the condensate can flow freely.
156	AIR_DAMPER_ERROR	Air Damper feedback is not received when the relative output is closed		
162	FLUE_BLOCKED	Flue is blocked, demand needs to be stopped with fan at ignition speed, but no error needed to be stored at this time		
163	LOWEXFLOW_PROTECTION	Flow is too low, demand needs to be stopped with fan at ignition speed, but no error needed to be stored at this time	a- Flow through the module is below recommended rate. b- Check to ensure module pump is running. c- Verify valves are open. d- Possible air entrapment.	

WARNINGS

Error no.	Error	Description	Checks	Solutions
200	CC_LOSS_COMMUNICATION	Cascade System: Leading burner lost communication with one of the dependent burners	a- Check wiring and connections on individual Modules. b- Make sure both controllers in the boiler are powered on. c- Make sure Parameter 147 set to 2. d- Check the position of the S1 switches on the dependent module to make sure it is off.	
201	CC_LOSS_BOILER_COMM	Cascade System: Leading boiler lost communication with one of the dependent instantaneous water heaters	a- Check interconnecting wiring between instantaneous water heaters . b- Make sure all instantaneous water heaters are powered on. c- Make sure that Parameter 167 is set to proper number of instantaneous water heaters . d- Whichever boiler(s) loses communication with the Master Boiler will enter boiler level emergency mode. e- Check the position of the S1 switches on the managing boiler (on) and on the dependent boiler (off) to make sure they are set properly.	
202	OUTDOOR_WRONG	Outdoor sensor is open or shorted		
203	T_SYSTEM_WRONG	T_System sensor is open or shorted	a- Check connections of the boiler mounted sensor. b- This will cause Module Emergency Mode to activate on that particular boiler. c- Remaining cascade will continue to operate as normal. d- Check the value of the reading of this sensor on the info screen.	
204	T_CASCADE_WRONG	T_Cascade sensor is open or shorted	a- Check connections of the System sensor mounted in the header. b- This will cause Boiler level emergency mode to activate on all instantaneous water heaters in the cascade. c- Check the value of the reading of this sensor on the info screen.	
205	HIGH_LIMIT_TEST_WAIT_ACTIVE	Too many physical high limit test attempts within 24 hours.		
207	DHW_SENSOR_WRONG	DHW sensor is open or shorted		

Error no.	Error	Description	Checks	Solutions
208	ZONE_SENSOR_WRONG	Zone sensor is open or shorted		
209	BOILER_DEMAND-DISABLED	All incoming demand is disabled		

PLC ERRORS

Error no.	Error	Description	Checks	Solutions
301	RECIRC. PUMP FAULT	The internal logic of the software is checked. An alarm is triggered if there is inconsistency between the command and the output parameter.		
302	MIX VALVE FAULT	Alarm triggered if the feedback signal deviates from the calculated value by > ±8% for at least 30 seconds		
303	PRESSURE SWITCH 1 FAULT	Alarm triggered if the pressure switch is open. See dedicated section		
304	PRESSURE SWITCH 2 FAULT	Alarm triggered if the pressure switch is open. See dedicated section		Automatic recovery
305	DHW SUPPLY 1 SENSOR FAULT	The measured value is outside the range of 33.8 °F (1°C) to 212 °F (100°C)		Automatic recovery
306	DHW SUPPLY 2 SENSOR FAULT	The measured value is outside the range of 33.8 °F (1°C) to 212 °F (100°C)		Automatic recovery
307	DHW RETURN SENSOR FAULT	The measured value is outside the range of 33.8 °F (1°C) to 212 °F (100°C)		Automatic recovery
308	DHW FLOWMETER FAULT	The measured value is outside the range of -1.32 gpm to 660.43 gpm (-5 l/min to 2500 l/min)		Automatic recovery
310	ANTILEGIONELLA FAULT	If the Antilegionella setpoint is not reached for 20 consecutive minutes		Automatic recovery
311	ANTILEGIONELLA POSTPONED	Warning – Antilegionella is postponed 24h because there is a DHW request		Automatic recovery
312	ANTILEGIONELLA MAX ATTEMPTS	The Antilegionella is postponed for more than 6 times		Automatic recovery

APPENDIX C – LIST OF PARAMETERS

Parameters are listed based on the reference menu.

Reference Menu
M1 Parameters Menu
M2 Cascaded module configuration menu
M3 Cascaded boiler configuration menu
M4 Appliance configuration menu

Access type
U End user
I Installer
0 Manufacturer

Menu	Par. No.	Display visualization	Description	Range	Default setting	UM	Access type	Category
M1		CH Control	Enable or disable the heating circuit	Enabled/Disabled	Enabled		I	Heating
M1	1	CH mode	Defines the thermal module's various heating operation modes	0...5	4		I	Heating
M1	3	CH setpoint	Defines the desired delivery temperature in heating mode (Par. 1) = 0	30...80 (86..176)	60 (140)	°C (°F)	U	Heating
M1	185	Calc. setpoint off-set	It is possible to shift the climatic curve up and down. The calculated setpoint can be increased or decreased with a maximum of 18°F (10°C)	-10...10	0	°C (°F)	I	Heating
M1	109	Comp. T. @ Bas. Outd	Establishes the set-point offset value calculated in climatic mode (Par. 1= 1). Offsets the climatic curve in presence of mild outdoor temperatures	Off. -10...10	0		I	Heating
M1	110	CH Min. setpoint	Defines the minimum delivery temperature at which the system operates in both heating and DHW mode	20...50 (68...122)	20 (68)	°C (°F)	I	Heating
M1	111	CH Max. setpoint	Defines the maximum delivery temperature at which the system operates in both heating and DHW mode	50...90 (122...194)	90 (194)	°C (°F)	I	Heating
M1	190	Outd. Comp. Fact		0...100	0	%	I	Heating
M1	5	Boiler Pump Overrun	Sets the overrun time in seconds of the boiler's pump during stand-alone operation; cascaded operation determines the module's overrun after switch-off due to temperature control	0...900	300	Sec	I	Heating
M1	6	Flue Temp. Limit	Sets the activation temperature when the maximum flue gas temperature is exceeded, when the flue gas temperature is higher than a set value, the module switches off and an error message is generated, when the flue gas temperature is in the interval between (Par. 6) -9°F (-5°C) and Par. 6, the module reduces its power in a linear way until it reaches minimum power when the temperature measured is equal to Par. 6	10...120 (50...248)	100 (212)	°C (°F)	0	General
M1	7	CH Hysteresis Up	Sets the value in degrees beyond the set-point at which the burner switches off for thermoregulation.	0...20 (32...68)	6 (43)	°C (°F)	I	Heating
M1	112	CH Hysteresis Down	Sets the value in degrees below the set-point at which the burner switches on again for thermoregulation	0...20 (32...68)	6 (43)	°C (°F)	I	Heating
M1	9	Anti-cycle Period	Sets the standby time before the appliance is switched on again after it switches off due to thermoregulation, independently from the delivery temperature dropping below the value indicated in Par. 10. Parameter valid only in stand-alone mode	10...900	180	Sec	I	Heating
M1	10	Anti-cycle Temp. Diff.	Sets the value in degrees below which the burner switches on again notwithstanding from the time spent at Par. 9	0...20 (32...68)	16 (61)	°C (°F)	I	Heating

Menu	Par. No.	Display visualization	Description	Range	Default setting	UM	Access type	Category
M1	12	Hx diff. Minimum	Sets the value of the temperature difference (Delta T) between the module's delivery and return temperature. For a Delta T value ranging between Par. 12 and (Par. 12) 14.4°F (+8°C), the module reduces its power in a linear fashion until it reaches the minimum power. The minimum power is maintained until reaching (Par. 12) 14.4°F(+8°C) 9.0°F (+5°C), after which the module switches off for a period of time equal to the value attributed to Par. 13; at the end of this time interval, the module switches on again	10...60 (50...140)	40 (104)	°C (°F)	0	General
M1	13	Hx Diff. Max. Wait Time	Defines the restart time after reaching the Delta T limit between delivery and return	10...250	10	Sec.	0	Heating
M1	14	Max. Power CH	Sets the heating's % max. power	50...100	100	%		Heating
M1	15	Min. Power CH	Sets the heating's % min. power	1...30	1	%		Heating
M1	16	CH PID P	Defines the proportional parameter for modulation during heating operation	0...1275	50		0	Heating
M1	17	CH PID I	Defines the modulation integral term during heating operation	0...1275	500		0	Heating
M1	18	CH PID D	Defines the modulation derivative term during heating operation	0...1275	0		0	Heating
M1	19	Design supply Temp	Defines the max. setpoint at the minimum outdoor temperature for climatic regulation	20...90 (68...194)	90 (194)	°C (°F)	U	Heating
M1	20	Design Outdoor Temp	Defines the minimum outdoor temperature to which the maximum set-point can be associated for climatic regulation	-25...25 (-13...77)	-5 (23)	°C (°F)	U	Heating
M1	21	Baseline Supply Temp	Defines the minimum set-point at the maximum outdoor temperature for climatic regulation	20...90 (68...194)	40 (104)	°C (°F)	I	Heating
M1	22	Baseline Outdoor Temp	Defines the maximum minimum outdoor temperature to which the minimum set-point can be associated for climatic regulation	0...30 (32...86)	20 (68)	°C (°F)	I	Heating
M1	23	Design Supply Min. Limit	Limits the minimum value that can be assigned to the set-point in heating mode (does not apply to heating mode 4)	4...82 (39...180)	30 (86)	°C (°F)	I	Heating
M1	24	Design Supply Max. Limit	Limits the maximum value that can be assigned to the set-point in heating mode (does not apply to heating mode 4)	27...90 (81...194)	90 (194)	°C (°F)	I	Heating
M1	25	Warm Weather Shutdown	Defines the temperature at which climatic regulation is switched off	0...50 (32...95)	22 (72)	°C (°F)	I	Heating
M1	26	Boost Temp Increment	Establishes the set-point temperature increase delta T, if the heat demand in heating mode is not satisfied after the time interval specified in Par. 27 (applies only to stand-alone mode)	0...30 (32...90)	0 (32)	°C (°F)	I	Heating
M1	27	Boost Time Delay	Defines the time interval after which the setpoint is increased as defined in Par. 26 (applies only to stand-alone mode)	1...120	20	Min.	I	Heating
M1	28	Night Setback Temp	Used in heating mode Par. 1= 2 or 3. Establishes by how many degrees the delivery set-point is reduced when the RT (room thermostat/heat demand) contact is closed	0...30 (32...90)	10 (50)	°C (°F)	I	Heating
M1	195	WWSD Enable	It is possible to enable/disable the shutdown of the entire system due to high external temperatures, both CH and ZH	Enabled/Disabled	Enabled		I	Heating
		DHW Control	Enable or disable the DHW circuit	Enabled/Disabled	Disabled		I	Heating

Menu	Par. No.	Display visualization	Description	Range	Default setting	UM	Access type	Category
M1	35	DHW mode	Establishes the domestic hot water circuit's operation mode. 0 = Disabled 1 = Tank + sensor 2 = Tank + thermostat	0.1.2	0		I	DHW
M1	113	Max. Power DHW	Defines the domestic hot water circuit's % max. power	50...100	50	%	I	DHW
	114	Min. Power DHW	Defines the domestic hot water circuit's % minimum power	1...30	1	%	I	DHW
M1	36	DHW Tank Hyst. Down	Defines the hysteresis to initiate the domestic hot water demand	0...20 (32...68)	5 (41)	°C (°F)	I	DHW
M1	37	DHW Tank Hyst. Up	Defines the hysteresis to stop the domestic hot water demand	0...20 (32...68)	5 (41)	°C (°F)	I	DHW
M1	38	DHW Tank Supply Extra	Defines the primary circuit's set-point increase in degrees compared to the temperature set for the domestic hot water tank	0...30 (32...86)	15 (59)	°C (°F)	I	DHW
M1	39	DHW Tank Supp Hyst Dn	Defines the primary circuit's restart hysteresis in modes 1 and 2 of domestic hot water (valid both for cascade and stand-alone applications)	0...20 (32...68)	5 (41)	°C (°F)	0	DHW
M1	40	DHW Tank Supp Hyst Up	Defines the primary circuit's shut-off hysteresis in modes 1 and 2 of domestic hot water (valid both for cascade and stand-alone applications)	0...20 (32...68)	5 (41)	°C (°F)	0	DHW
M1	41	DHW Tank Hold Warm	Defines the value of a storage tank's delta T required for temperature maintenance. For instance, if set at 3 degrees, when the storage tank is at a set-point value minus 3 degrees, the thermal module is switched on at minimum power to maintain the temperature to the set-point plus hysteresis. If this parameter is kept the same as Par. 36, this function is inactive and the thermal module is switched on to the maximum power envisaged for the DHW circuit	0...10 (32...50)	5 (9)	°C (°F)	0	DHW
M1	42	DHW Priority	Defines the priority type: 0 = Time: time priority between the two circuits defined by Par. 43; 1 = Off: priority for CH; 2 = On: priority for DHW; 3 = Parallel: parallel priority managed on the basis of the primary circuit's temperature compared to the heating circuit's set-point	0. Time 1. Parallel 2. On (DHW) 3. Off (CH)	0 = Time		I	DHW
M1	43	DHW Max. Priority Time	Establishes the time in minutes during which priority is alternatively allocated to the DHW and CH circuits when Par. 42 is set to "time" mode	1...255	60	Min.	I	DHW
M1	44	DHW Pump Overrun	Establishes the overrun time in seconds for the domestic hot water mode with the boiler in stand-alone operation; cascaded operation defines the module's overrun after switch-off due to thermoregulation	0...900	0	Sec.	I	DHW
M1	45	DHW Tank PID P	Defines the proportional term for modulation during operation of the DHW storage tank	0...1255	100		0	DHW
M1	46	DHW Tank PID I	Defines the integral term for modulation during operation of the DHW storage tank	0...1255	500		0	DHW
M1	47	DHW Tank PID D	Defines the derivative term for modulation during operation of the DHW storage tank	0...1255	0		0	DHW
M1	48	DHW tank set-point	Establishes the DHW storage tank set-point	40...71 (104...160)	50 (122)	°C (°F)	U	DHW
M1	49	DHW Hysteresis Down	"reserved"	0...20 (32...68)	4 (39)	°C (°F)	0	DHW
M1	50	DHW Hysteresis Up	"reserved"	0...20 (32...68)	4 (39)	°C (°F)	0	DHW
M1	51	DHW Instant PID P	"reserved"	0...1255	100		0	DHW

Menu	Par. No.	Display visualization	Description	Range	Default setting	UM	Access type	Category
M1	52	DHW Instant PID I	"reserved"	0...1255	160		0	DHW
M1	53	DHW Instant PID D	"reserved"	0...1255	0		0	DHW
M1	60	Flow Rate Start	"reserved"	0.1...20	1.4	l/min	0	DHW
M1	61	Flow Rate Lo Temp Pwr	"reserved"	0.1...20	1.4	l/min	0	DHW
M1	62	Flow Rate Hi Temp Pwr	"reserved"	0.1...20	1.4	l/min	0	DHW
M1	63	DHW On Off Period	"reserved"	10...60	30	Sec.	0	DHW
M1	64	PreHeat Mode	"reserved"	Off, Comfort, Eco, Anti-Fr	Off		U	DHW
M1	65	PreHeat Mode Eco Setpoint	"reserved"	20...60 (68...140)	30 (86)	°C (°F)	0	DHW
M1	67	PreHeat After Tap Hld Time	"reserved"	0...255	30	Sec.	0	DHW
M1	68	After Tap Hold Time	"reserved"	0...255	120	Sec.	0	DHW
M1	69	PreHeat Hyst Down	"reserved"	0...30 (32...86)	5 (41)	°C (°F)	0	DHW
M1	70	PreHeat Hyst Up	"reserved"	0...30 (32...86)	0 (32)	°C (°F)	0	DHW
M1	71	PreHeat Delay Time	"reserved"	0...15	10	Sec	0	DHW
M1	92	Fan Speed Maximum	Defines the number of fan rpm at max. power (it depends on the model)	0...12750	6900	RPM	I	General
M1	93	Fan Speed Minimum	Defines the number of fan rpm at minimum power (it depends on the model).	0...12750	1650	RPM	I	General
M1	94	Fan Speed Ignition	Defines the number of fan rpm when the boiler is switched on (it depends on the model).	0...12750	2850	RPM	I	General
M1	116	Prog. Input 1.	0 = Disabled 1 = Water pressure sensor 2 = CH flow switch 3 = Flue pressure switch	0.1.2.3	Defined by Par. 97		I	General
M1	117	Prog. Input 2	0 = Disabled 1 = DHW flow sensor 2 = DHW flow switch 3 = CH flow sensor.	0.1.2.3.	Defined by Par. 97		I	General
M1	118	Prog. Input 3.	0 = Disabled 1 = Drain switch 2 = Gas pressure switch	0.1.2	Defined by Par. 97		I	General
M1	120	Prog. Input 5	0 = Disabled 1 = T_Return sensor 2 = Extern switch	0.1.2	Defined by Par. 97		I	General
M1	121	Prog. Input 6	0 = Disabled 1 = T_Flue sensor 2 = Flue switch 3 = APS switch	0.1.2.3	Defined by Par. 97		I	General
M1	122	Prog. Input 7	0 = Disabled 1 = T_Flue_2 sensor 2 = T_Flue_2 + Bl. Flue 3 T_System sensor 4 = Blocked Flue switch 5 Cascade Sensor	0.1.2.3.4.5	Defined by Par. 97		I	General
M1	123	Prog. Input 8	0 = Disabled 1 = T_DCW sensor 2 = Water pressure switch	0.1.2	Defined by Par. 97		I	General
M1	188	Prog. Input 9	0 = Disabled 1 = T_DHW sensor 2 = Zone sensor	NA	Defined by Par. 97		I	General
M1	124	Prog. Input RT.	0 = Disabled 1 = Enabled	1			I	General

Menu	Par. No.	Display visualization	Description	Range	Default setting	UM	Access type	Category
M1	125	Prog. Output 1	0) Disabled 1) General Pump 2) CH Pump 3) DHW Pump 4) System Pump 5) Cascade Pump 6) Alarm Relay 7) Filling Valve 8) LP Tank 9) External Igniter 10) Air Damper 14) Alarm Burner CC 15) Status Burner CC 16) Zone pump 17)Mixing valve open 18)Mixing valve closed 19) Antilegionella 20) LP Tank cascade	0.1.2.3.4.5.6.7.8.9.10.14.15 .16.17.18.19.20	Defined by Par. 97		I	General
M1	126	Prog. Output 2	0) Disabled 1) General Pump 2) CH Pump 3) DHW Pump 4) System Pump 5) Cascade Pump 6) Alarm Relay 7) Filling Valve 8) LP Tank 9) External Igniter 10) Air Damper 14) Alarm Burner CC 15) Status Burner CC 16) Zone pump 17) Mixing valve open 18) Mixing valve closed 19) Antilegionella pump 20) LP Tank cascade	0.1.2.3.4.5.6.7.8.9.10.14.15 .16.17.18.19.20	Defined by Par. 97		I	General
M1	127	Prog. Output 3	0) Disabled 1) General Pump 6) Alarm Relay 9) External Igniter 10) Air Damper 11) External Igniter 12) Modulating pump	0.1.2.3.4.5.6.7.8.9.10.11.12	Defined by Par. 97		I	General
M1	128	Prog. Output 4	0) Disabled 1) General Pump 2) CH Pump 3) DHW Pump 4) System Pump 5) Cascade Pump 6) Alarm Relay 7) Filling Valve 8) LP Tank 9) External Igniter 10) Air Damper 14) Alarm Burner CC 15) Status Burner CC 16)Zone pump 17)Mixing valve open 18)Mixing valve closed 19)Antilegionella 20) LP Tank cascade	0.1.2.3.4.5.6.7.8.9.10.14.15 .16.17.18.19.20	Defined by Par. 97		I	General

Menu	Par. No.	Display visualization	Description	Range	Default setting	UM	Access type	Category
M1	187	Prog. Output 5	0) Disabled 1) General Pump 2) CH Pump 3) DHW Pump 4) System Pump 5) Cascade Pump 6) Alarm Relay 7) Filling Valve 8) LP Tank 9) External Igniter 10) Air Damper 14) Alarm Burner CC 15) Status Burner CC 16) Zone pump 17) Mixing valve open 18) Mixing valve closed 19) Antilegionella 20) LP Tank cascade	0.1.2.3.4.5.6.7.8.9.10.14.15 .16.17.18.19.20	Defined by Par. 97		I	General
M1	129	Flow Sensor	Defines the type of flow sensor used.	Huba: DN8, DN10, DN15, DN15, DN20, DN25, DN32	Huba DN25		I	General
M1	130	Flow Scaling Factor	"reserved"	0...25.5	3.2	rpm/l	I	DHW
M1	131	Min Press.	"reserved"	Off. 0.3...5.0	0.1 (1.5)	bar (PSI)	I	DHW
M1	132	Pressure Fill Hyst.	"reserved"	Off. 0.2...5.0	0.5 (7.3)	bar (PSI)	I	DHW
M1	133	Mod. Pump dT	Defines the delta T set for the operation of the modulating pump.	5...40 (41..104)	15 (59)	°C (°F)	I	General
M1	134	Mod. Pump Start Time	Defines the time in seconds from the moment the burner is switched on to start the modulation of the pump and obtain the delta T specified in Par. 133.	0...255	120	Sec.	I	General
M1	135	Mod. Pump Type	Defines the PWM pump model installed. 0 = Wilo 1 = Salmson 2 = Grundfos	0. Wilo Yonos 1. Salmson 2. Grundfos	0. Wilo Yonos		I	General
M1	136	Mod. Pump Mode	Defines whether the boiler's pump operates in modulating mode or at a set speed (as a percentage of maximum speed).	0. On/Off 1. Modulating 2-10 Fixed 20... 100%	ON/OFF		I	General
M1	137	Mod. Pump Min Pwr	Defines the percentage of speed that sets the minimum speed that the pump can reach during modulation.	0...100	40	%	I	General
M1	139	Deair active	Activates bleeding the system's air. To activate air bleeding, it is necessary to switch on the boiler and change the parameter from "No" to "Yes". Wait for one minute. Switch off and restart. At this stage, when it is restarted the boiler will initiate the automatic bleeding procedure (lasting around 14 minutes). With the parameter set to "Yes", the procedure is carried out each time the boiler is switched off and restarted using its master switch. The value must be set to "No" if you do not wish to initiate the bleeding procedure when the thermal module is switched on.	Yes. No	No		I	General
M1	140	Minimum Flow	Defines the flow rate below which the boiler is switched off. The value varies depending on the model.	0.0...100	50	l/min	I	General
M1	196	HX flow timeout	If the minimum flow rate is not reached within the timeout, error 163 (LOWEXFLOW_PROTECTION) will be generated which will also cause the end of prepurge.	4...100	18	Sec	I	General
M1	107	Antilegionella Day	Sets the weekday on which the antilegionella procedure is carried out.	Sun...Sat.	Sunday	Day	I	DHW
M1	108	Antilegionella Hour	Sets the time of the day during which the Antilegionella procedure is carried out.	0...23	0	Hour	I	DHW
M1	183	High Limit Test	Enable limit thermostat physical test	Simulated/Physical	Simulated		0	General

Menu	Par. No.	Display visualization	Description	Range	Default setting	UM	Access type	Category
M1	155	Frost Protection	Defines the temperature (detected by the primary sensor) below which the thermal module pump and the system pump (with cascade configuration) activate. If the temperature of the primary sensor falls another 5 degrees below the value set by Par. 155, then a request to activate the cascade is generated, when the temperature of the primary sensor reaches the value defined by Par. 155 increased by 5 degrees, then the request ceases and the cascade returns to standby mode.	10...30 (50...86)	15 (59)	°C (°F)	I	General
M1	186	Frost protection outdoor	It defines the intervention temperature of the antifreeze function related to the external probe.	-30...15 (-22...59)	3 (37)	°C (°F)	I	General
M1	191	Fan Type	Defines the type of fan installed in the boiler.	0...15	Defined by Par. 97		I	General
M1	193	DHW for all	"reserved"	No...Yes	No		I	DHW
M2	189	Burner address	It is used to address the module.	Stand-alone (0) Managing (1) Dependent (2...16)	Managing (1)		I	DHW
M2		Dipswitch Config.	Enable or disable the Dipswitch function.	Enabled/Disabled	Enabled		I	Cascade
M2		Boiler demand disabled	All requests for this boiler are disabled.	Yes/No	Yes	.	I	Cascade
M2	72	Permit Emergency Mode	Activates the emergency mode. This mode comes on when communication between Managing and the primary circuit's probe is lost. In this event, if Par. 72 is set to "Yes", the cascade is initiated, working to the fixed set-point determined by Par. 74.	Yes/No	Yes	.	U	Cascade
M2	74	Emergency Set-point	Set-point active in emergency mode. ⚠ Do not set the temperature above 122°F (50°C) to avoid scalding.	20...90 (68...194)	50 (122)	°C (°F)	I	Cascade
M2	75	Delay Per Start Next Mod	Defines the standby time in seconds to restart the subsequent cascade module in normal start mode.	5...255	20	Sec.	I	Cascade
M2	76	Delay Per Stop Next Mod	Defines the standby time in seconds to switch off the last cascade module on in normal Off mode.	5...255	10	Sec	I	Cascade
M2	142	Delay Quick Start Next	Defines the standby time in seconds to restart the next cascade module in quick start mode.	5...255	10	Sec	I	Cascade
M2	143	Delay Quick Stop Next	Defines the standby time in seconds to switch off the last cascade module on in Quick Stop mode.	5...255	5	Sec	I	Cascade
M2	77	Hyst Down Start Module	Defines by how many degrees the temperature measured by the primary circuit's probe must fall below the set-point in order for the sub-sequent module to be started after the time interval set by Par. 75.	0...40 (32...104)	2 (36)	°C (°F)	I	Cascade
M2	78	Hyst Up Stop Module	Defines by how many degrees the temperature measured by the primary circuit's probe must go above the set-point in order for the subsequent module to be switched off after the time interval set by Par. 76.	0...40 (32...104)	8 (46)	°C (°F)	I	Cascade
M2	147	Number of Units	Defines the number of modules of which the cascade consists.	1...16 (basic cascade) 1...8 (full cascade)	2 (TH20 1000) 3 (TH20 1500)		I	Cascade
M2	144	Hyst Down Quick Start	Defines by how many degrees the temperature measured by the primary circuit's probe must go below the set-point in order for the sub-sequent module to be started after the time interval set by Par. 142 (quick-start mode).	0...40 (32...104)	10 (50)	°C (°F)	I	Cascade

Menu	Par. No.	Display visualization	Description	Range	Default setting	UM	Access type	Category
M2	145	Hyst Up Quick Stop	Defines by how many degrees the temperature measured by the primary circuit's probe must go above the set-point in order for the sub-sequent module to be switched off after the time interval set by Par. 143 (quick stop mode).	0...40 (32...104)	9 (48)	°C (°F)	I	Cascade
M2	146	Hyst Up Stop All	Defines by how many degrees the temperature measured by the primary circuit's probe must go above the set-point in order for all "On" modules to be switched off at the same time.	0...40 (32...104)	10 (50)	°C (°F)	I	Cascade
M2	148	Power mode	Defines the cascade operation mode 0 = Disabled 1 = Min burners 2 = Max burners	0.1.2.3	2		I	Cascade
M2	79	Max. Setp. Offset Down	Defines the maximum decrease in the primary circuit's cascade set-point. Is based on the primary circuit's probe reading.	0...40 (32...104)	0 (32)	°C (°F)	I	Cascade
M2	80	Max Setp. Offset Up	Defines the maximum increase in the primary circuit's cascade set-point. Is based on the primary circuit's probe reading.	0...40 (32...104)	20 (68)	°C (°F)	I	Cascade
M2	81	Start Mod Delay Fact	Defines the time in minutes from the moment the demand is triggered until the activation of the set-point increases or decreases provided for by Par. 79 e 80.	0...60	60	Min.	I	Cascade
M2	82	Next Module Start Rate	It defines the minimum power for at least one of the modules in the cascade in order for the next module to be switched on (if the other conditions linked to Par. 75 and 77 are met).	10...100	80	%	I	Cascade
M2	83	Next Module Stop Rate	It defines the maximum power for all the modules in the cascade in order for the last module on to be switched off (if the other conditions linked to Par. 76 and 78 are met).	10...100	25	%	I	Cascade
M2	84	Module Rotation Interval	It defines the time interval (in days) after which modules are rotated.	0...30	1	Days	I	Cascade
M2	149	First Module to Start	Establishes the number of the next module to be rotated (this value is automatically updated at each rotation).	1...8	1		I	Cascade
M2	86	PID P	Defines the proportional term to change the setpoint of the cascade module.	0...1275	50		0	Cascade
M2	87	PID I	Defines the integral term to change the set-point of the cascade module.	0...1275	250		0	Cascade
M2	150	PID Slew Rate Up	Defines the speed (in °C/100 ms) with which the set-point of individual modules is in-creased in the event the primary circuit's set-point is not achieved (if the value is set to zero, the change is controlled by the PI of Par. 86 and87 without restrictions).	0...25.5	5		0	Cascade
M2	151	PID Slew Rate Dn	Defines the speed (in °C/100 ms) with which the set-point of individual modules is decreased in the event the primary circuit's set-point is exceeded (if the value is set to zero, the change is controlled by the PI of Par. 86 and 87 without restrictions).	0...25.5	5		0	Cascade
M2	152	PwrMode2 Min Power	Defines the power value (in percentage terms) against which the average power of all on modules in cascade operation mode must be compared (Par. 148 = 2).	0...100	2	%	I	Cascade
M2	153	PwrMode2 Hysteresis	Defines the extra power value (in percentage terms) compared to the average power of all on modules in cascade operation mode (Par. 148 = 2).	0...100	10	%	I	Cascade

Menu	Par. No.	Display visualization	Description	Range	Default setting	UM	Access type	Category
M2	154	Post-Pump period	Defines overrun time in seconds at the end of the cascade heat demand.	0...255	30	Sec	I	Cascade
M2	184	N. active burner in DHW	With this setting it is possible to set the number of burners that are used for cascade DHW.	0...16	16		I	Cascade
M3	73	Boiler Address	Defines the way in which the boiler is managed.	Managing, Stand-alone, Dependent (2...8)	Stand-alone	.	I	Cascade
M3	156	Permit Emergency Mode	Enable/disable emergency mode.	Yes/No	Yes	.	U	Cascade
M3	157	Emergency Set-point	Defines the emergency mode setpoint.	20...90 (68...194)	70 (158)	°C (°F)	I	Cascade
M3	158	Delay Per Start Next Blr.	"reserved"	0...1275	1275	Sec.	I	Cascade
M3	159	Delay Per Stop Next Blr.	"reserved"	0...1275	1275	Sec	I	Cascade
M3	160	Delay Quick Start Next	"reserved"	0...1275	400	Sec	I	Cascade
M3	161	Delay Quick Stop Next	"reserved"	0...1275	240	Sec	I	Cascade
M3	162	Hyst Down Start Boiler	"reserved"	0...40 (32...104)	5 (41)	°C (°F)	I	Cascade
M3	163	Hyst Up Start Boiler	"reserved"	0...40 (32...104)	2 (36)	°C (°F)	I	Cascade
M3	164	Hyst Down Quick Start	"reserved"	0...40 (32...104)	10 (50)	°C (°F)	I	Cascade
M3	165	Hyst Up Quick Stop	"reserved"	0...40 (32...104)	4 (39)	°C (°F)	I	Cascade
M3	166	Hyst Up Stop All	"reserved"	0...60 (32...140)	8 (46)	°C (°F)	I	Cascade
M3	167	Number of instantaneous water heaters	"reserved"	1...16 (basic cascade) 1...8 (full cascade)	1		I	Cascade
M3	168	Power Mode	"reserved"	0) Disabled 2) Max burners 3) Balanced burners	2		I	Cascade
M3	169	Max. Setp. Offset Down	Defines the maximum decrease in the primary circuit's cascade set-point. Is based on the secondary circuit's probe reading.	0...40 (32...104)	0 (32)	°C (°F)	I	Cascade
M3	170	Max Setp. Offset Up	Defines the maximum increase in the primary circuit's cascade set-point. Is based on the secondary circuit's probe reading.	0...40 (32...104)	20 (68)	°C (°F)	I	Cascade
M3	171	Start Mod Delay Fact	Defines the time in minutes from the moment the request is triggered until the activation of the set-point increases or decreases provided for by Par.169 e 170.	0...255	20	Min.	I	Cascade
M3	172	Next Boiler Start Rate	"reserved"	10...100	80	%	I	Cascade
M3	173	Next Boiler Stop Rate	"reserved"	10...100	25	%	I	Cascade
M3	174	Module Rotation Interval	"reserved"	0...30	5	Days	I	Cascade
M3	175	First Boiler to Start	"reserved"	1...8	1		I	Cascade
M3	176	PID P	Defines the proportional term to change the set-point of the cascade module based on the secondary circuit's temperature.	0...1275	25		0	Cascade
M3	177	PID I	Defines the integral term to change the set-point of the cascade module based on the secondary circuit's temperature.	0...1275	500		0	Cascade
M3	178	PID Slew Rate Up	Defines the speed (in °C/100 ms) with which the set-point of individual modules is in-creased in the event the secondary circuit's set-point not reached (if the value is set to zero, the change is controlled by the PI of Par. 176 and 177 without restrictions).	0...25.5	5		0	Cascade

Menu	Par. No.	Display visualization	Description	Range	Default setting	UM	Access type	Category
M3	179	PID Slew Rate Dn	Defines the speed (in °C/100 ms) with which the set-point of individual modules is decreased in the event the primary circuit's set-point is exceeded (if the value is set to zero, the change is controlled by the PI of Par. 176 and 177 without restrictions).	0...25.5	5		0	Cascade
M3	180	PwrMode2 Min Power	"reserved"	0...100	20	%	I	Cascade
M3	181	PwrMode2 Min Hysteresis	"reserved"	0...100	40	%	I	Cascade
M3	182	Post-Pump period	"reserved"	0...255	30	Sec	I	Cascade
M4		Appliance model	Defines the boiler model	1...4	3		0	General
M4	98	Appliance settings	Supports uploading the values of Par. 92. 93 and 94 from a set of pre-defined rpm values that identifies the boiler type.	1...92	see below		I	General
M4	97	I0 Configuration	Supports uploading the values of Par. from 116 to 128, 187 and 188 from a set of predefined I/O configurations that defines the configuration of the boiler's inputs and outputs.	1...53	see below		I	General

BOARD	Parameter 97 I/O Configuration	Parameter 98 Appliance
MANAGING	12	NG: (Max 6900rpm Min 1650rpm Ignit 2850rpm)
DEPENDENT	13	NG: (Max 6900rpm Min 1650rpm Ignit 2850rpm)

APPENDIX D – List of PLC Parameters

Press button.
From SETTINGS screen, tap the PARAMETER button, to open the password setup view.

Click on the designated area to access the user and password entry window.



- Digit Factory for user and press enter



- Select the password field and enter the Factory password



- Press enter
- Select OK to validate.
- Press the PARAMETER button again to have access to the parameter list.

Note: After changing a display parameter, wait approximately 1 minute to ensure that the new value is properly saved.

Please note that on the TS it is not possible to automatically restore the factory default settings.

PLC parameters		Range				Set Value	
		Min		Max			
Setpoint DHW Max		86.0°F	30°C	158.0°F	70°C	158.0°F	70°C
Setpoint DHW Min		86.0°F	30°C	158.0°F	70°C	86.0°F	30°C
Hyst DHW Off		0.0°F	0°C	59°F	15°C	10.8°F	6°C
Hyst DHW On		0.0°F	0°C	59°F	15°C	0.0°F	0°C
Setpoint Primary Min [2 Vdc]		68.0°F	20°C	212°F	100°C	68.0°F	20°C
Setpoint Primary Max [9 Vdc]		68.0°F	20°C	212°F	100°C	194.0°F	90°C
DHW supply Extra Low Power		0.0°F	0°C	140°F	60°C	18.0°F	10°C
DHW supply Extra Max Power		0.0°F	0°C	140°F	60°C	36.0°F	20°C
Low Power Level		0 MBtu/h/h	0 kW	1535 MBtu/h/h	450.0 kW	51 MBtu/h	15 kW
High Power Level	**TH20 1000**	0 MBtu/h	0 kW	1535 MBtu/h	450.0 kW	1024 MBtu/h	300.0 kW
	TH20 1500	0 MBtu/h	0 kW	1535 MBtu/h	450.0 kW	1535 MBtu/h	450.0 kW
TRh1		0 MBtu/h/h	0 kW	1535 MBtu/h/h	450 kW	171 MBtu/h	50 kW
TRh2		0 MBtu/h/h	0 kW	1535 MBtu/h/h	450 kW	512 MBtu/h	150 kW
Hyst TRh		0 MBtu/h	0 kW	870 MBtu/h	255 kW	34 MBtu/h	10 kW
Max Flow Rec. Pump		0 gpm	0 L/min	158.5 gpm	600 L/min	79.3 gpm	300 L/min
Hyst Flow Rec. Pump		0 gpm	0 L/min	26.4 gpm	100 L/min	1.3 gpm	5 L/min
Check time antileg. HE		0 s		600 s		60 s	
Check time antileg. SYS		0 s		600 s		300 s	

PLC parameters	Min		Max		Set value	
	TH20 1000	TH20 1500	TH20 1000	TH20 1500	TH20 1000	TH20 1500
Flow Meter Scale	0		999		150	240
P1	0		999		1.6	1.6
I1	0		999		0.5	0.5
D1	0		999		0	0
P2	0		999		1.6	1.6
I2	0		999		0.6	0.6
D2	0		999		0	0
P3	0		999		1.55	1.55
I3	0		999		0.5	0.5
D3	0		999		0	0

APPENDIX E – CONNECTION DIAGRAM

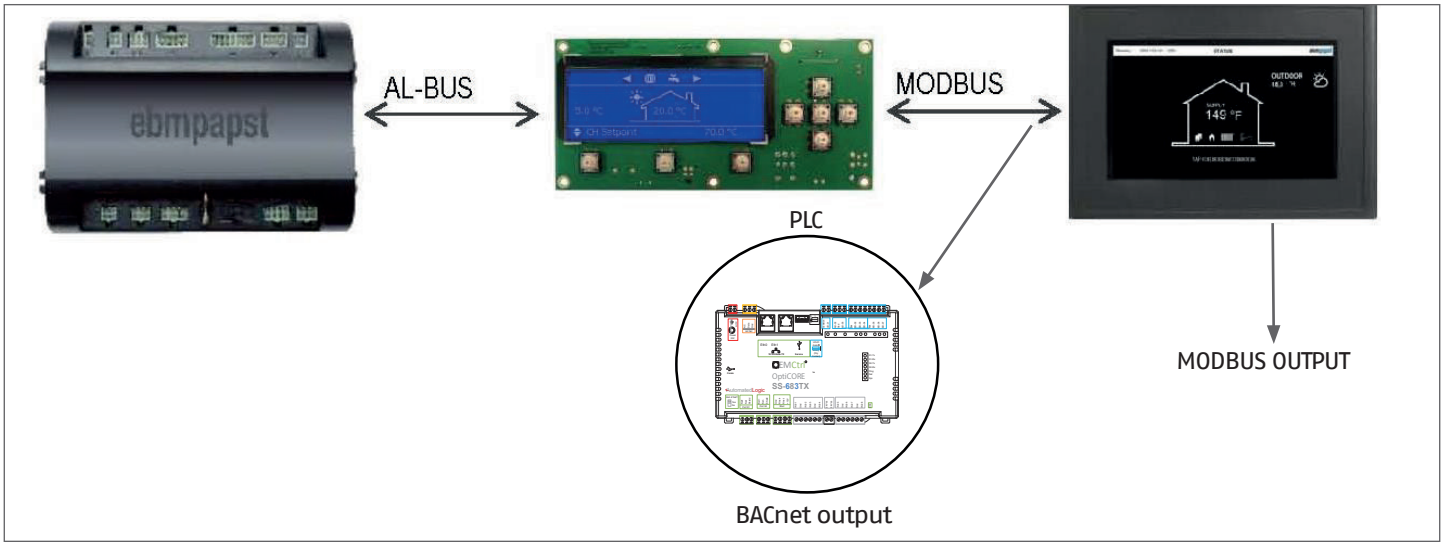

MODBUS

⚠ Used only for advanced service.

Port	Pin	Function	Pin	Port
Terminal Block	7	GND	5	TS – Con. A
Terminal Block	6	TX +	9	TS – Con. A
Terminal Block	5	RX –	6	TS – Con. A
TS – Con. A	1	RX –	4	PB
TS – Con. A	2	TX +	1	PB

Pins on connector Con. A of Touchscreen

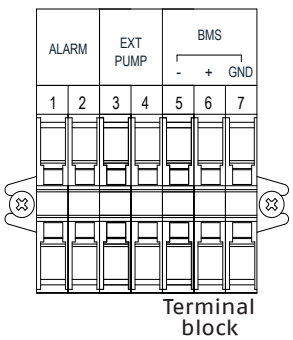

Terminal block

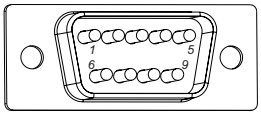

Con. A
(rear view)

APPENDIX F – VENTING SIZE DATA

While there is a positive flue pressure during operation, the combined pressure drop of vent and combustion air systems must not exceed the following equivalent length:

MODEL	PIPE SIZE – 8"	
	MAX equiv. mt	MAX equiv. ft
TH20 1000	30	100
TH20 1500	30	100

Fittings as well as pipe lengths must be calculated as part of the equivalent length, according to the following table:

MODEL	45° ELBOW – 8"		90° ELBOW – 8"	
	MAX equiv. mt	MAX equiv. ft	MAX equiv. mt	MAX equiv. ft
TH20 1000	2.0	6.6	2.4	7.9
TH20 1500	2.0	6.6	2.4	7.9

Data for Venting size

TH20 1000	T supply/return 176/140 °F 80/60 °C				T supply/return 104/86 °F 40/30 °C			
	Maximum Input		Minimum Input		Maximum Input		Minimum Input	
CO_2	9.0%		9.0%		9.0%		9.0%	
Exhaust gas mass (weight)	0.26 lb/s		0.013 lb/s		0.26 lb/s		0.013 lb/s	
Flue temperature	162°F (72°C)		144 °F (62°C)		108 °F (42°C)		90 °F (32°C)	
Max. pressure at instantaneous water heater exit @ high fire condition	0.81 in H_20	202 Pa	0.08 in H_20	19 Pa	0.90 in H20	224 Pa	0.16 in H_20	40 Pa

TH201500	T supply/return 176/140 °F 80/60 °C				T supply/return 104/86 °F 40/30 °C			
	Maximum Input		Minimum Input		Maximum Input		Minimum Input	
CO_2	9%		9%		9%		9.0%	
Exhaust gas mass (weight)	0.40 lb/s		0.013 lb/s		0.40 lb/s		0.013 lb/s	
Flue temperature	162°F (72°C)		144 °F (62°C)		108 °F (42°C)		90 °F (32°C)	
Max. pressure at instantaneous water heater exit @ high fire condition	0.70 in H_20	174 Pa	0.08 in H_20	19 Pa	0.79 in H20	197 Pa	0.16 in H_20	40 Pa

The instantaneous water heater/ vent installation must be in compliance with ANSI Z223.1/ NFPA 54 and all local, state and federal regulations for building code. Venting system shall be designed to maintain suitable vent pressure at the product exhaust collar.

For a list of suitable venting materials consult the installation manual section "4.3 Venting".
Adapters are available for various brands of venting materials. Consult the factory for a list of available adapters.

Venting components from different manufacturers shall not be mixed.

Adequate combustion air must be supplied to the instantaneous water heater to ensure safe operation. A properly sized direct connected common combustion air duct may be used for sealed combustion air to the instantaneous water heater cascade.

For additional information regarding combustion air supply consult the installation manual section"4.4 Combustion Air".

Prior to installing a permanent vent system refer to the Installation Manual. ANSI Z223.1/ NFPA 54 and all local, state and federal regulations for building code to ensure compliance with the requirements of these articles.

APPENDIX G – EXHAUST TERMINALS AND AIR INLET CLEARANCES

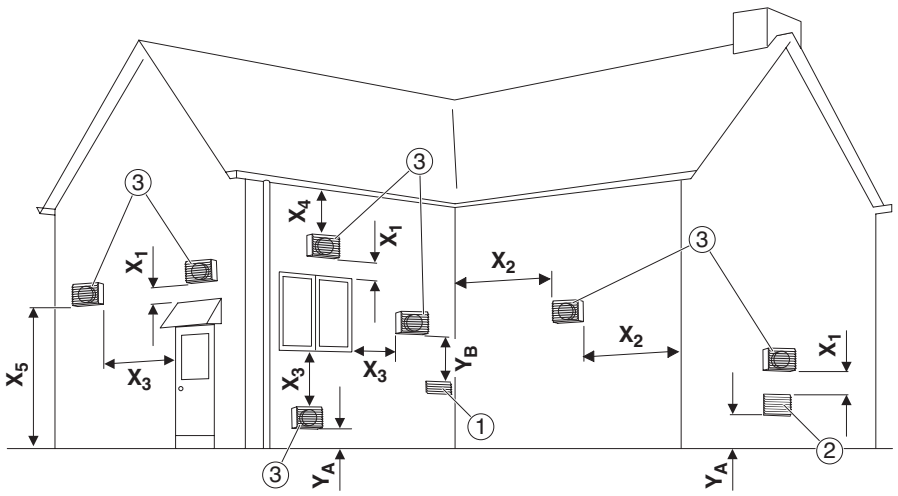

Direct vent (sealed combustion)

1 Forced air inlet
2 Gravity air inlet
3 Exhaust terminal
X1 1 foot (305 mm)
X2 See Note 1)
X3 1 foot (305 mm) USA
3 feet (915 mm) Canada
X4 See Note 1)
X5 7 feet (2135 mm)
YA At least 1 foot (305 mm) above grade or snow line
YB Exhaust terminal must be at least:
3 feet (915 mm) above forced air inlet within 10 feet (3050 mm) horizontally – USA
6 feet (915 mm) above forced air inlet - Canada

Fan assisted appliance (Room air for combustion)

1 Forced air inlet
2 Gravity air inlet
3 Exhaust terminal
X1 1 foot (305 mm)
X2 See Note 1)
X3 1 foot (305 mm) USA
3 feet (915 mm) Canada
X4 See Note 1)
X5 7 feet (2135 mm)
YA At least 1 foot (305 mm) above grade or snow line
YB Exhaust terminal must be at least:
3 feet (915 mm) above forced air inlet within 10 feet (3050 mm) horizontally – USA
6 feet (915 mm) above forced air inlet - Canada

It is not recommended to terminate vent above any door or window, condensate can freeze causing ice formations.
Do not use chimney as a raceway if another instantaneous water heater or fireplace is vented into or through chimney.
All CPVC vent pipes must be glued, except for the flue gas adapter pipe connection.
Vent terminations must keep the following minimum clearances from electric meters, gas meters, regulators and relief equipment: 4 feet (1220 mm) [Canada 6 feet (1830 mm)] horizontally and in no case above and below, unless a horizontal distance of 4 feet (1220 mm) [Canada 6 feet (1830 mm)] is maintained.

NOTE
1) For Clearances not specified in ANSI Z223.1/NFPA 54 or CSA B149.1 Clearance in accordance with local installation codes and the requirements of the gas supplier including the Authority having jurisdiction.

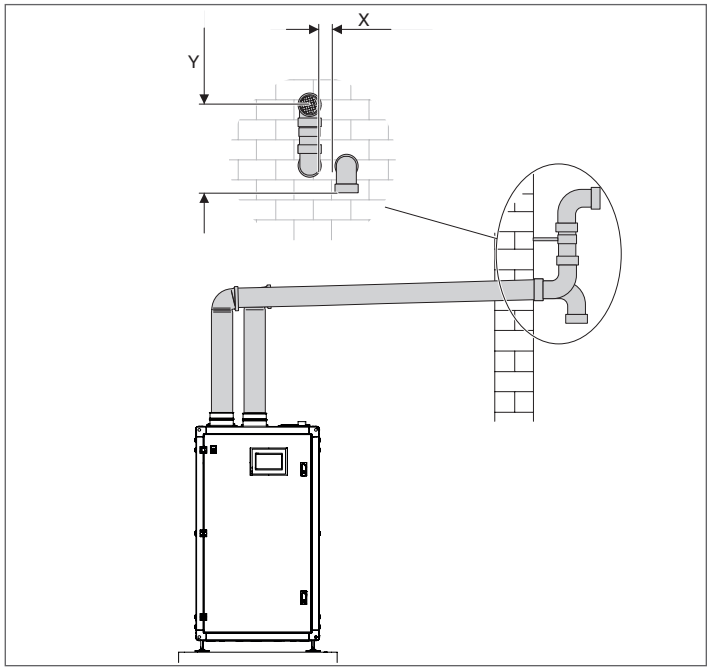

Horizontal venting system (sealed combustion):
X ≥ 4" (102 mm);
Y ≥ 12" (305 mm)

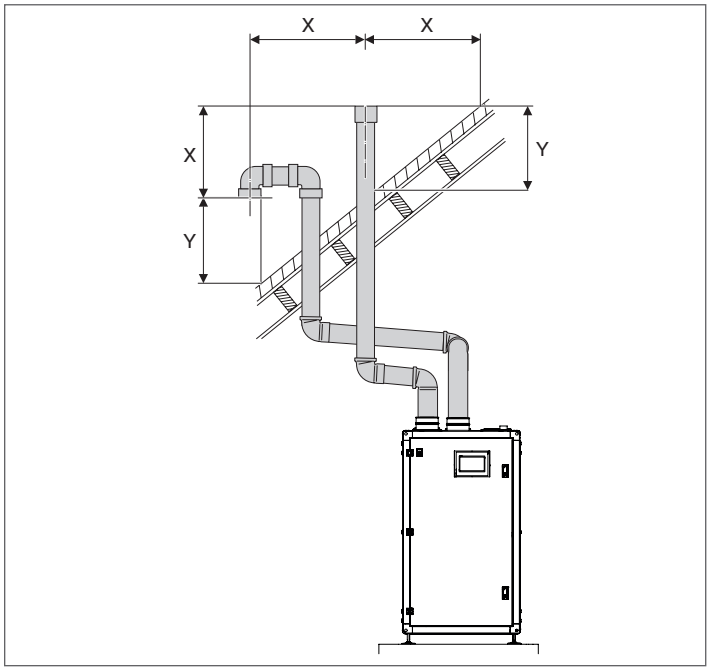

Vertical venting system (sealed combustion):
X > 12" (305 mm)
Y = 12" (305 mm) above maximum snow level or at least 24" whichever is greater

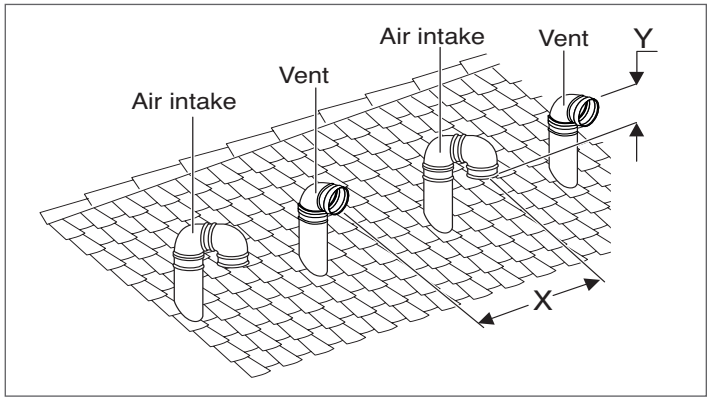

Multiple air and vent vertical termination:
X ≥ 12" (305 mm);
Y ≥ 12" (305 mm)

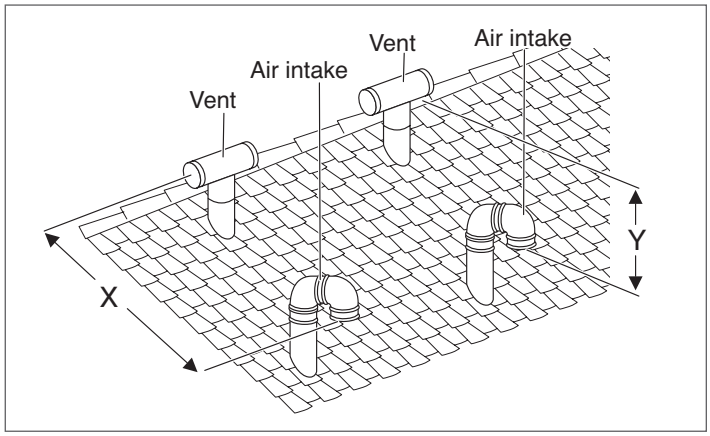

Multiple air and vent vertical termination:
X ≥ 12" (305 mm);
Y ≥ 12" (305 mm)

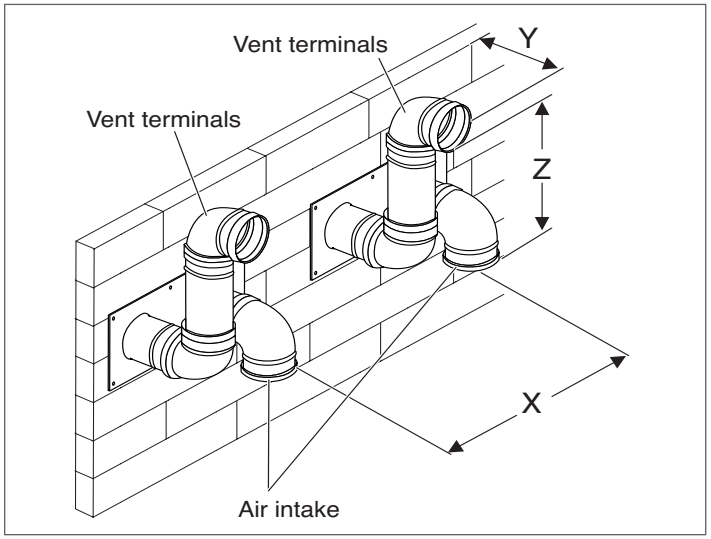

Multiple air and vent horizontal termination:
X ≥ 12" (305 mm);
Y ≤ 25" (635 mm)
Z = 12" to 16" (305 mm to 406 mm)

APPENDIX H – SYSTEM DIAGRAM

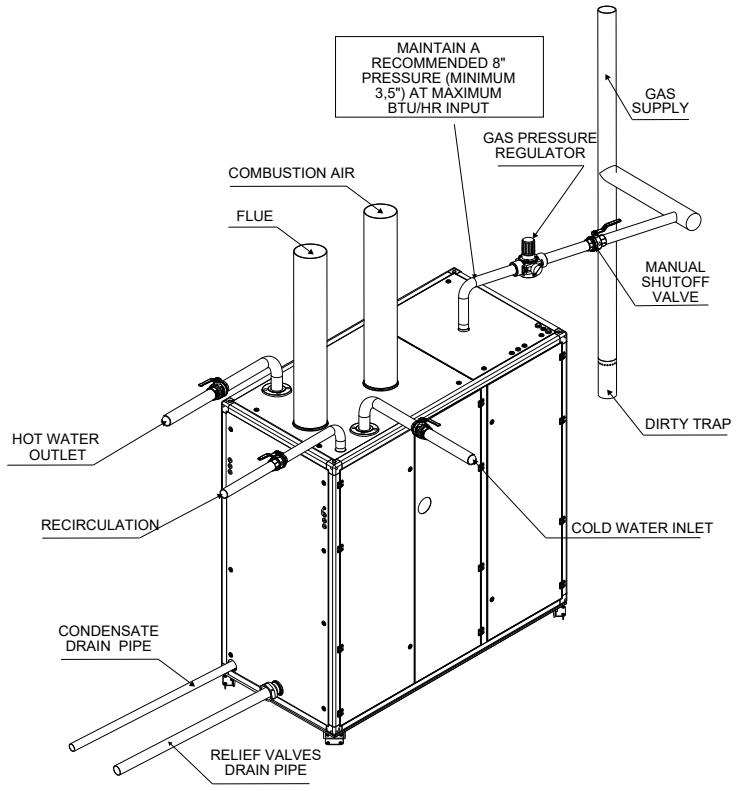

NOTE:

- This drawing is intended to show system piping concept only
- Installations must comply with all local codes.
- Install a minimum of 12 diameters of straight pipe upstream of all pumps.
- Install a minimum of 6 diameters of straight pipe up and downstream of all closely spaced tees.
- Recommended: (and required when supply pressure is greater than 13.5" w.c.): gas pressure regulator (lever-acting, positive-lockup type with over-pressure protection (internal relief)
- The condensate drain tube must pitch away from the boiler (1/4" slope per foot) and must never reduce its diameter downstream.





RIELLO

RIELLO S.p.A.
37045 Legnago (VR)
Tel. 0442630111 - Fax 044222378

RIELLO NORTH AMERICA
2165 Meadowpine Blvd
Mississauga, Ontario
Canada L5N 6H6
Tel. (905) 542-0303

www.riello.com/north-america/
www.rielloboilers.com

The manufacturer strives to continuously improve all products. Appearance, dimensions, technical specifications, standard equipment and accessories are therefore subject to change without notice.