GB

Premix gas burner

Progressive two-stage or modulating operation with pilot flame ignition

CODE	MODEL	TYPE
20148878	RX 1500 S/E	S022

20151518 (9) - 03/2021

Translation of the original instructions

1 Declarations ... 3

2 Information and general warnings ... 4

2.1 Information about the instruction manual ... 4
2.1.1 Introduction ... 4
2.1.2 General dangers ... 4
2.1.3 Other symbols ... 4
2.1.4 Delivery of the system and the instruction manual ... 5
2.2 Guarantee and responsibility ... 5

3 Safety and prevention ... 6

3.1 Introduction ... 6
3.2 Personnel training ... 6

4 Technical description of the burner ... 7

4.1 Models available ... 7
4.2 Burner categories - Countries of destination ... 7
4.3 Technical data ... 7
4.4 Electrical data ... 7
4.5 Maximum dimensions ... 8
4.6 Burner equipment ... 8
4.7 Firing rate ... 9
4.7.1 Commercial boilers ... 9
4.8 Test boiler ... 9
4.9 Burner description ... 10
4.10 Control box for the air/fuel ratio (REC 27.../REC37...) ... 11
4.11 Operation sequence of the burner ... 14
4.11.1 List of phases ... 15
4.12 Operator panel operation ... 15
4.12.1 Description of the symbols on the display ... 15
4.12.2 Description of the buttons ... 16
4.13 Servomotor (SQM33....) ... 17

5 Installation ... 18

5.1 Notes on safety for the installation ... 18
5.2 Handling ... 18
5.3 Preliminary checks ... 18
5.4 Operating position ... 19
5.5 Preparing the boiler ... 19
5.5.1 Boring the boiler plate ... 19
5.5.2 Blast tube length ... 19
5.6 Securing the burner to the boiler ... 20
5.7 Electrode and flame sensor positioning ... 21
5.8 Gas line ... 22
5.8.1 Gas train ... 23
5.8.2 Gas pressure ... 23
5.8.3 Pilot gas train installation ... 23
5.9 Electrical wiring ... 24
5.9.1 Supply cables and external connections passage 24
5.10 Calibration of the thermal relay ... 25
5.11 Filter kit installation ... 25

6 Start-up, calibration and operation of the burner ... 26

6.1 Notes on safety for the first start-up ... 26
6.2 Adjustments prior to ignition ... 26

6.3 Burner start-up 26
6.4 Burner adjustment 27
6.5 Ignition pilot adjustment 27
6.6 Air / fuel adjustment 27
6.6.1 Air adjustment for maximum output 27
6.6.2 Air/fuel adjustment and output modulation system 27
6.7 Final adjustment of the pressure switches 28
6.7.1 Air pressure switch 28
6.7.2 Maximum gas pressure switch 28
6.7.3 Minimum gas pressure switch 28
6.7.4 Pressure switch for the leak detection control 29
6.7.5 Air pressure switches with intake filter 29
6.8 Visualisation and programming mode 30
6.8.1 Normal mode 30
6.8.2 Info mode 31
6.8.3 Service mode 32
6.8.4 Parameters Mode 32
6.9 Parameter modification procedure 33
6.10 Start-up procedure 35
6.11 Backup / Restore procedure 37
6.11.1 Backup 37
6.11.2 Restore 38
6.11.3 List of parameters 39
6.12 Operation 43
6.13 Motor lockout 43
6.14 Ignition failure 43
6.15 Burner flame goes out during operation 43
6.16 Stopping of the burner 44
6.17 Final checks (with burner operating) 44
6.18 Monitoring system of the combustion head temperature 44

7 Maintenance 45
7.1 Notes on safety for the maintenance 45
7.2 Maintenance programme 45
7.2.1 Maintenance frequency 45
7.2.2 Safety test - with gas feeding closed 45
7.2.3 Checking and cleaning 45
7.2.4 Safety components 46
7.2.5 Electrical current to flame sensor 46
7.2.6 Measuring the flame signal 46
7.2.7 Flame sensor 47
7.2.8 Checking the gas pressure on the combustion head 47
7.2.9 Electrode extraction 47
7.3 Opening the burner 48
7.4 Access to head internal part 48
7.5 Closing the burner 48

8 Faults - Probable causes - Solutions 49
8.1 List of error codes 49

A Appendix - Accessories 56

B Appendix - Electrical panel layout 57

1 Declarations

Declaration of Conformity in accordance with ISO / IEC 17050-1		
Manufacturer:	RIELLO S.p.A.	
Address:	Via Pilade Riello, 7 37045 Legnago (VR)	
Product:	Premix gas burner	
Model and type	RX 1500 S/E	S022
This product is in compliance with the following Technical Standards:		
EN 676		
EN 12100		
and according to the European Directives:		
GAR	2016/426/EU	Gas Appliances Regulation
MD	2006/42/EC	Machine Directive
LVD	2014/35/UE	Low Voltage Directive
EMC	2014/30/UE	Electromagnetic Compatibility
The products are marked as follows:		
CE	**CE-0085CT0448**	

The quality is guaranteed by a quality and management system certified in accordance with ISO 9001:2015.

Legnago, 21.04.2018

Executive General Manager
RIELLO S.p.A. - Burner Department
Mr. U. Ferretti

Research & Development Director
RIELLO S.p.A. - Burner Department
Mr. F. Comencini

2 Information and general warnings

2.1 Information about the instruction manual

2.1.1 Introduction

The instruction manual supplied with the burner:

- ➤ is an integral and essential part of the product and must not be separated from it; it must therefore be kept carefully for any necessary consultation and must accompany the burner even if it is transferred to another owner or user, or to another system. If the manual is lost or damaged, another copy must be requested from the Technical Assistance Service of the area;
- ➤ is designed for use by qualified personnel;
- ➤ offers important indications and instructions relating to the installation safety, start-up, use and maintenance of the burner.

Symbols used in the manual

In some parts of the manual you will see triangular DANGER signs. Pay great attention to these, as they indicate a situation of potential danger.

2.1.2 General dangers

The **dangers** can be of **3 levels**, as indicated below.

Maximum danger level!
This symbol indicates operations which, if not carried out correctly, cause serious injury, death or long-term health risks.

This symbol indicates operations which, if not carried out correctly, may cause serious injury, death or long-term health risks.

This symbol indicates operations which, if not carried out correctly, may cause damage to the machine and/or injury to people.

2.1.3 Other symbols

DANGER: LIVE COMPONENTS

This symbol indicates operations which, if not carried out correctly, lead to electric shocks with lethal consequences.

DANGER: FLAMMABLE MATERIAL

This symbol indicates the presence of flammable materials.

DANGER: BURNING

This symbol indicates the risks of burns due to high temperatures.

DANGER: CRUSHING OF LIMBS

This symbol indicates the presence of moving parts: danger of crushing of limbs.

WARNING: MOVING PARTS

This symbol indicates that you must keep limbs away from moving mechanical parts; danger of crushing.

DANGER: EXPLOSION

This symbol signals places where an explosive atmosphere may be present. An explosive atmosphere is defined as a mixture - under atmospheric conditions - of air and flammable substances in the form of gases, vapours, mist or dust in which, after ignition has occurred, combustion spreads to the entire unburned mixture.

PERSONAL PROTECTION EQUIPMENT

These symbols indicate the equipment that must be worn and kept by the operator for protection against threats against safety and/or health while at work.

OBLIGATION TO ASSEMBLE THE COVER AND ALL THE SAFETY AND PROTECTION DEVICES

This symbol signals the obligation to reassemble the cover and all the safety and protection devices of the burner after any maintenance, cleaning or checking operations.

ENVIRONMENTAL PROTECTION

This symbol gives indications for the use of the machine with respect for the environment.

IMPORTANT INFORMATION

This symbol indicates important information that you must bear in mind.

➤ This symbol indicates a list.

Abbreviations used

Ch.	Chapter
Fig.	Figure
Page	Page
Sec.	Section
Tab.	Table

2.1.4 Delivery of the system and the instruction manual

When the system is delivered, it is important that:

➤ the instruction manual is delivered to the user by the system manufacturer, with the recommendation to keep it in the room where the heat generator is to be installed.

➤ The instruction manual shows:
- the serial number of the burner;

  .....

- the address and telephone number of the nearest Assistance Centre.

  .....
  .....
  .....

➤ The system supplier must carefully inform the user about:
- the use of the system;
- any further tests that may be required before activating the system;
- maintenance, and the need to have the system checked at least once a year by a representative of the manufacturer or another specialised technician.
  To ensure a periodic check, the manufacturer recommends the drawing up of a Maintenance Contract.

2.2 Guarantee and responsibility

The manufacturer guarantees its new products from the date of installation, in accordance with the regulations in force and/or the sales contract. At the moment of the first start-up, check that the burner is integral and complete.

ATTENTION

Failure to observe the information given in this manual, operating negligence, incorrect installation and carrying out of non authorised modifications will result in the annulment by the manufacturer of the guarantee that it supplies with the burner.

In particular, the rights to the guarantee and the responsibility will no longer be valid, in the event of damage to things or injury to people, if such damage/injury was due to any of the following causes:

➤ incorrect installation, start-up, use and maintenance of the burner;
➤ improper, incorrect or unreasonable use of the burner;
➤ intervention of unqualified personnel;
➤ carrying out of unauthorised modifications on the equipment;
➤ use of the burner with safety devices that are faulty, incorrectly applied and/or not working;
➤ installation of untested supplementary components on the burner;
➤ powering of the burner with unsuitable fuels;
➤ faults in the fuel supply system;
➤ continuation of use of the burner when a fault has occurred;
➤ repairs and/or overhauls incorrectly carried out;
➤ modification of the combustion chamber with inserts that prevent the regular development of the structurally established flame;
➤ insufficient and inappropriate surveillance and care of those burner components most likely to be subject to wear and tear;
➤ use of non-original components, including spare parts, kits, accessories and optional;
➤ force majeure.

The manufacturer furthermore declines any and every responsibility for the failure to observe the contents of this manual.

3 Safety and prevention

3.1 Introduction

The burners have been designed and built in compliance with current regulations and directives, applying the known technical rules of safety and envisaging all the potential danger situations.

It is necessary, however, to bear in mind that the imprudent and clumsy use of the equipment may lead to situations of death risk for the user or third parties, as well as the damaging of the burner or other items. Inattention, thoughtlessness and excessive confidence often cause accidents; the same applies to tiredness and sleepiness.

It is a good idea to remember the following:

➤ The burner must only be used as expressly described. Any other use should be considered improper and therefore dangerous.

In particular:

it can be applied to boilers operating with water, steam, diathermic oil, and to other uses expressly named by the manufacturer; the type and pressure of the fuel, the voltage and frequency of the electrical power supply, the minimum and maximum deliveries for which the burner has been regulated, the pressurisation of the combustion chamber, the dimensions of the combustion chamber and the ambient temperature must all be within the values indicated in the instruction manual.

➤ Modification of the burner to alter its performance and destinations is not allowed.

➤ The burner must be used in exemplary technical safety conditions. Any disturbances that could compromise safety must be quickly eliminated.

➤ Opening or tampering with the burner components is not allowed, apart from the parts requiring maintenance.

➤ Only those parts envisaged by the manufacturer can be replaced.

The manufacturer guarantees safety and proper functioning only if all burner components are intact and positioned correctly.

3.2 Personnel training

The user is the person, body or company that has acquired the machine and intends to use it for the specific purpose. He is responsible for the machine and for the training of the people working around it.

The user:

➤ undertakes to entrust the machine exclusively to suitably trained and qualified personnel;

➤ undertakes to inform his personnel in a suitable way about the application and observance of the safety instructions. With that aim, the user undertakes to ensure that everyone knows the use and safety instructions for his own duties;

➤ Personnel must follow all the danger and caution indications shown on the machine.

➤ Personnel must not carry out, on their own initiative, operations or interventions that are not within their province.

➤ Personnel are obliged to inform their superiors of every problem or dangerous situation that may arise.

➤ The assembly of parts of other makes, or any modifications, can alter the characteristics of the machine and hence compromise operating safety. The manufacturing company therefore accepts no responsibility whatsoever for any which may result from the use of non-original parts.

In addition:

➤ must take all the measures necessary to prevent unauthorised people gaining access to the machine;

➤ the user must inform the manufacturer if faults or malfunctioning of the accident prevention systems are noticed, along with any presumed danger situation;

➤ personnel must always use the personal protective equipment envisaged by legislation and follow the indications given in this manual.

4 Technical description of the burner

4.1 Models available

Designation	Voltage	Start-up	Code
RX 1500 S/E	3/400/50	Direct	20148878

Tab. A

4.2 Burner categories - Countries of destination

Country of destination	Gas category
AT-BG-CH-CZ-DK-EE-ES-FI-GB-GR-HU-IE-IS-IT-LT-LV-NO-PT-RO-SE-SI-SK-TR	I2H
BE	I2E(R)
DE-LU-PL	I2E

Tab. B

4.3 Technical data

Model			RX 1500 S/E
Output (1)	min - max	kW	300 - 1830 (300 - 1450)(4)
Fuels			Natural gas: G20 (methane)
Gas G20 pressure at max. output (2)		mbar	15.3 (10.3)(4)
Operation			FS1: Intermittent (min. 1 stop in 24 hours)
Standard applications			Boilers: water, steam, diathermic oil
Ambient temperature		°C	0 - 50
Combustion air temperature		°C max	60
Burner weight (without packging)		kg	117
Inlet pressure of gas train		mbar	40-250
Noise levels (3)	Sound pressure Sound power	dB(A)	82.6 (78.5)(4) 96.0 (91.8)(4)

Tab. C

(1) Reference conditions: Ambient temperature 20°C - Gas temperature 15°C - Barometric pressure 1,013 mbar - Altitude 0 m a.s.l.

(2) Pressure at the gas pressure test point of the combustion head 6)(Fig. 5 on page 10) with zero pressure in the combustion chamber and at maximum burner output.

(3) Sound pressure measured in manufacturer's combustion laboratory, with burner operating on test boiler and at maximum rated output. The sound power is measured with the “Free Field” method, as per EN 15036, and according to an accurate “Accuracy: Category 3” measurement, as described in EN ISO 3746.

(4) With filter.

4.4 Electrical data

Model		RX 1500 S/E
Main electrical supply		3~ 400V +/-10% 50 Hz
Fan motor IE3	rpm V kW A	2935 230/400 5.5 17.7/10.2
Ignition transformer	V1 - V2 I1 - I2	230 V - 1 x 15 kV 0,3 A - 30 mA
Absorbed electrical power	kW max	6.65
Protection degree		IP44

Tab. D

4.5 Maximum dimensions

The maximum dimensions of the burner are given in Fig. 1.

Bear in mind that inspection of the combustion head requires the burner to be opened and the rear part drawn back on the slide bars.

The maximum dimensions of the open burner are indicated by position P.

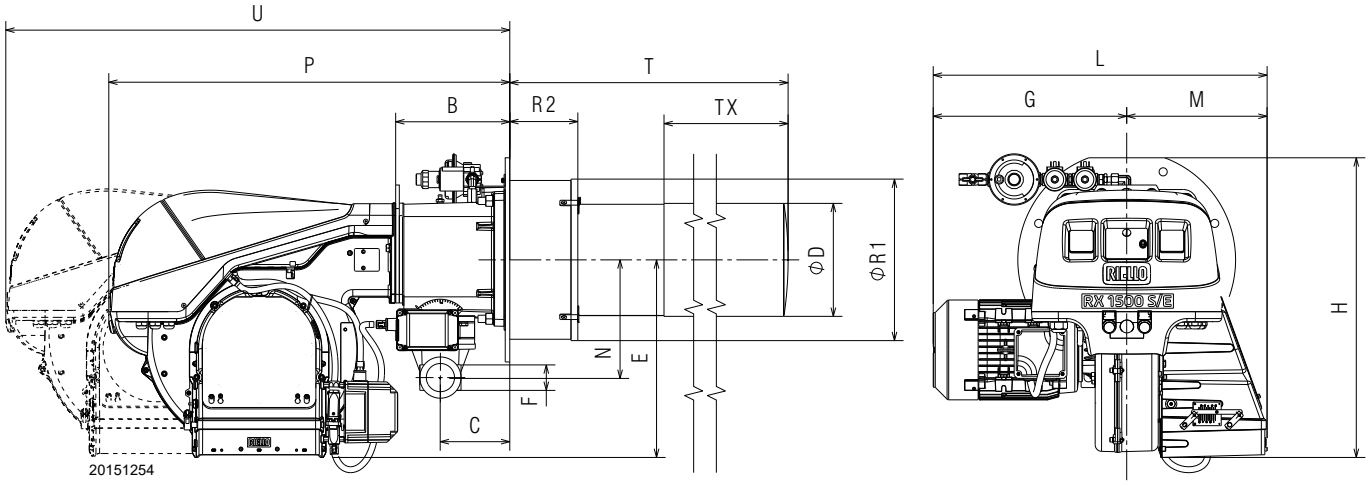

Fig. 1

mm	B	C	D	E	F	G	H	L	M	N	P	R1	R2	T	TX	U
RX 1500 S/E	250	154	250	440	2”	426	660	734	308	260	885	360	150	950	590	1060

Tab. E

mm	A	B	C
RX 1500 S/E	2150	1300	1070

Tab. F

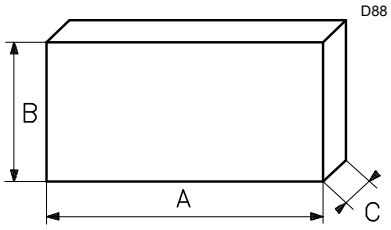

Fig. 2

4.6 Burner equipment

Thermal insulation screen . . . . . No. 1
Gasket for gas train adaptor. . . . . No. 1
Adaptor for gas train. . . . . No. 1
Screws M10x40 and washers for fixing the gas train adaptor . . . . . No. 4
Pressostat . . . . . No. 1
Pressure switch connection . . . . . No. 1
Valve adaptor . . . . . No. 1
Pilot gas train . . . . . No. 1
Spare parts list . . . . . No. 1
Instruction booklet . . . . . No. 1

4.7 Firing rate

The maximum output power must not be higher than the maximum limit of the diagram (Fig. 3).

The **minimum output** must not be lower than the minimum limit of the diagram.

ATTENTION

The firing rate (Fig. 3) was obtained considering a room temperature of 20°C and an atmospheric pressure of 1013 mbar (approx. 0 m above sea level).

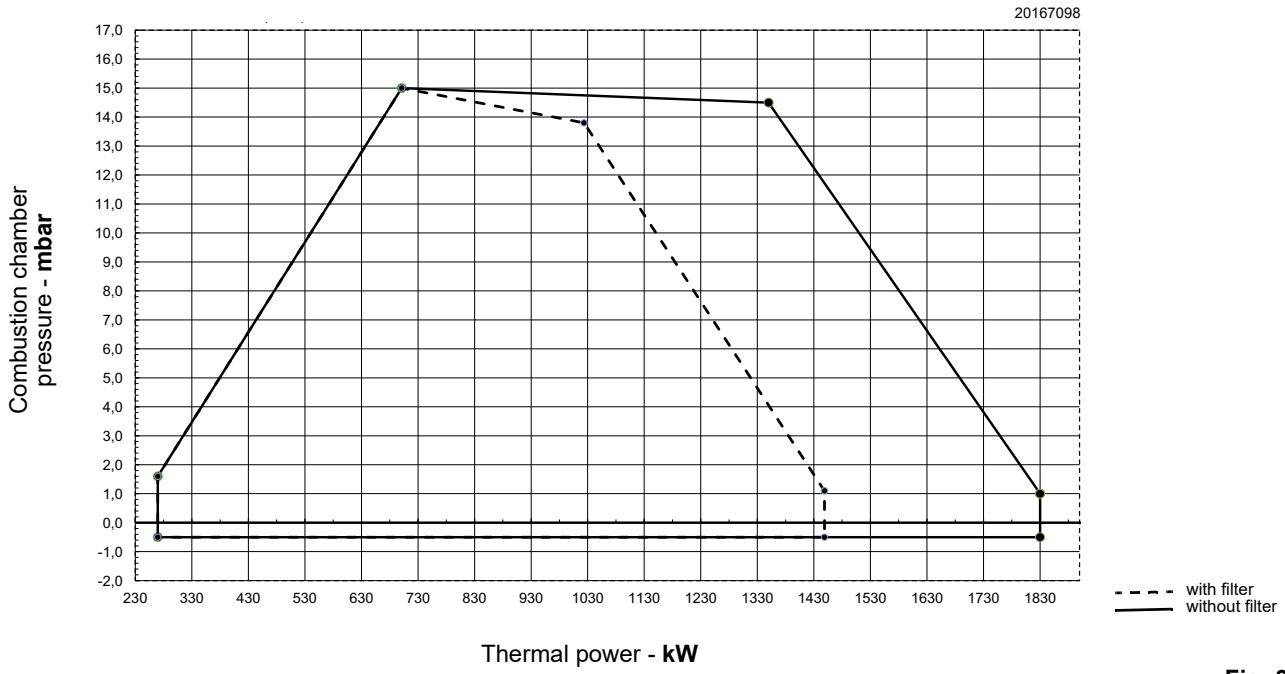

Fig. 3

4.7.1 Commercial boilers

The burner-boiler combination does not pose any problems if the boiler is EC type-approved.

If, however, the burner is to be used with a commercial boiler that has not been EC approved and/or its combustion chamber dimensions are distinctly smaller, consult the manufacturer.

You are advised to use this burner for boilers with a frontal circulation of the flue gases.

4.8 Test boiler

The firing rate was obtained in special test boilers, according to EN 676 regulations.

Fig. 4 indicates the diameter and length of the test combustion chamber.

Example:
Output 756 kW (650 Mcal/h) - diameter 60 cm, length 2 m.

The coupling is ensured when the boiler is EC type-approved; for boilers or ovens with combustion chambers of very different dimensions compared to those shown in the diagram of Fig. 4, preliminary checks are recommended.

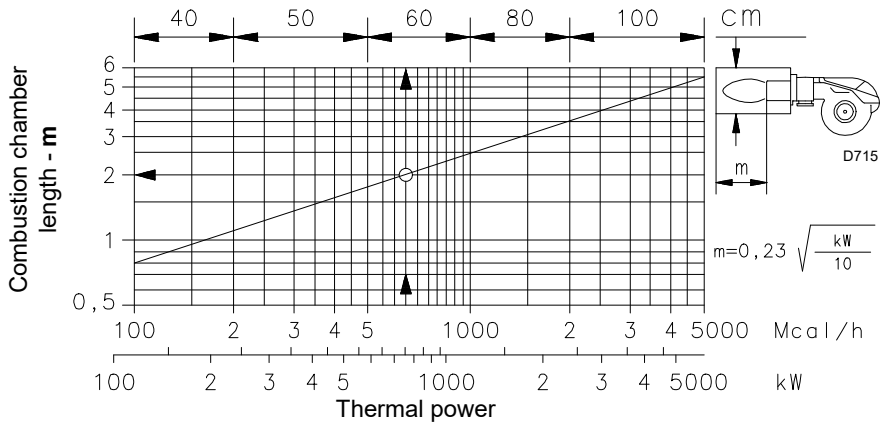

Fig. 4

4.9 Burner description

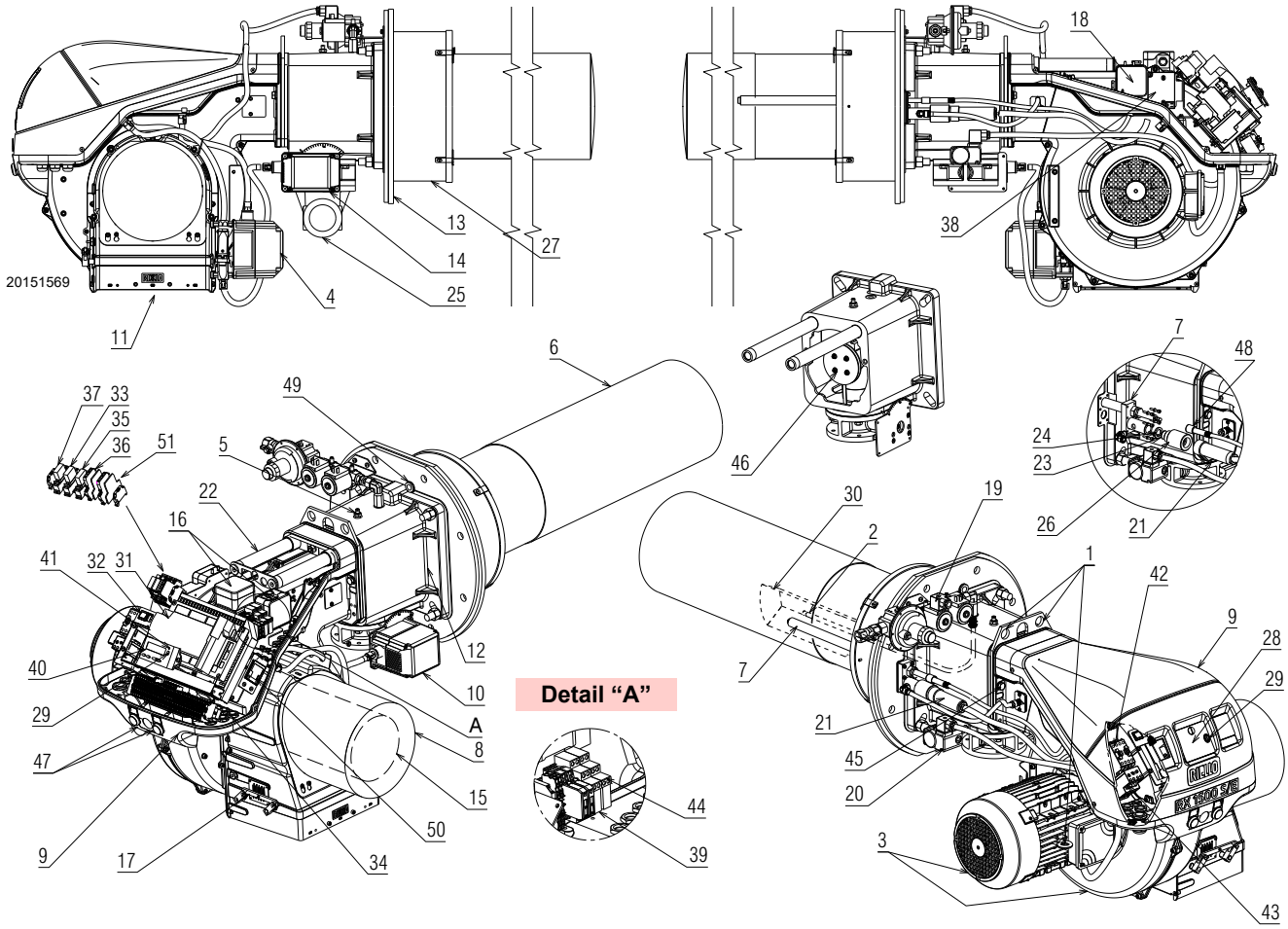

Fig. 5

1 Lifting rings
2 Pilot pipe
3 Fan motor
4 Air damper servomotor
5 Combustion head gas pressure test point
6 Combustion head
7 Ignition electrode
8 Filter cover
9 Cover
10 Gas butterfly valve servomotor
11 Fan air inlet
12 Pipe coupling
13 Gasket for boiler fixing
14 Gas butterfly valve
15 Filter (accessory to be ordered separately)
16 Air filter pressure switch
17 Lever for controlling the dampers with graduated scale
18 Air pressure switch
19 Pilot gas train
20 Maximum gas pressure switch with pressure test point
21 Flame sensor
22 Sliding guides
23 Viewing port
24 Seal
25 Gas train adapter
26 Thermal insulation
27 Fixing flange with insulating panel
28 Transparent protection
29 Reset button
30 Pilot pipe protection
31 Electrical control box
32 ON/OFF selector
33 Relay with clean contacts for signalling the burner is in lock-out
34 Supply cables and external connections passage. See section “**Electrical wiring**” on page 24
35 Relay with clean contacts for signalling the burner is operating
36 Auxiliary circuits fuse (includes a spare fuse)
37 Main terminal supply board
38 Ignition transformer
39 Filter pressure switches circuits fuse (includes a spare fuse)
40 Operator panel with LCD display
41 Light signalling burner lockout
42 Direct start up line contactor
43 Thermal relay (with RESET button)
44 Filter pressure switch circuits relay
45 Fixing screws for fan-manifold
46 Gas distributor
47 Air filter signals
48 Electrode connection
49 Flame inspection window
50 Control device of the combustion head temperature
51 Fuse for control device of the combustion head temperature

4.10 Control box for the air/fuel ratio (REC 27.../REC37...)

Important notes

To avoid accidents, material or environmental damage, observe the following instructions!

The control box is a safety device! Avoid opening or modifying it, or forcing its operation. Riello S.p.A. cannot assume any responsibility for damage resulting from unauthorised interventions!

Risk of explosion!

An incorrect configuration can provoke fuel overcharging, with the consequential risk of explosion! Operators must be aware that incorrect settings made on the display and operating unit and incorrect settings of the fuel and / or air actuator positions can lead to dangerous burner operating conditions.

- ➤ All interventions (assembly and installation operations, assistance, etc.) must be carried out by qualified personnel.
- ➤ Before modifying the wiring in the control box connection area, fully disconnect the system from the power supply (omnipolar separation). Check the system is not powered and cannot be accidentally reconnected. Failure to do this will lead to the risk of electrocution.
- ➤ Protection against electrocution from the control box and all connected electric components is obtained with correct assembly.
- ➤ Before any intervention (assembly and installation operations, assistance, etc.), ensure the wiring is in order and that the parameters are correctly set, then make the safety checks.
- ➤ Falls and collisions can negatively affect the safety functions. In this case, the control box must not be operated, even if it displays no evident damage.
- ➤ During the programming of the control curves of the air-fuel ratio, the technician should constantly observe the quality of the combustion process (for example, using a gas analyser) and, if the combustion values are too low or if there are dangerous conditions, take the appropriate action, for example by manually switching off the system.
- ➤ The plugs of the connection cables or other accessories can be removed or changed when the system is off.
- ➤ The connections to the actuators do not provide a safe separation of the mains voltage. Before connecting or changing the actuators, the system should be switched off.

To ensure the safety and reliability of the control box, the following instructions must also be followed:

– avoid conditions that can favour the development of condensate and humidity. Otherwise, before switching on again, make sure that the entire control box is perfectly dry!
– Static charges must be avoided since they can damage the control box's electronic components when touched.

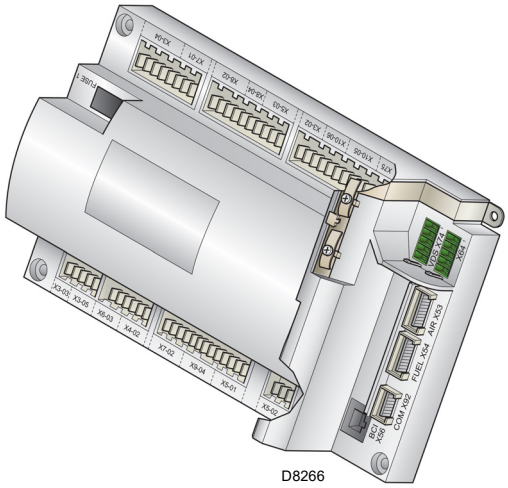

Fig. 6

Installation notes

- ➤ Arrange the HV ignition cables separately, as far as possible from the control box and the other cables.
- ➤ Check the electric wiring inside the boiler complies with the national and local safety regulations.
- ➤ Phase and neutral should not be exchanged (cause of dangerous malfunctions, loss of protection against electric shocks, etc..).
- ➤ Make certain that strain relief of the connected cables is in compliance with the relevant standards (e.g. as per EN60730 e EN60 335).
- ➤ Ensure that spliced wires cannot get into contact with neighbouring terminals. Use adequate ferrules.
- ➤ The mechanical connection between the actuators and the elements for controlling the fuel and air, or other control elements, should be rigid.
- ➤ When wiring the unit, make sure that AC 230V mains voltage cables are run strictly separate from extra low-voltage cables to avoid risks of electrical shock hazard.

Electrical connection of flame sensor

It is important for signal transmission to be almost totally free of any disturbances or loss:

➤ always separate the sensor cables from the other cables:
  – line capacitance reduces the magnitude of the flame signal.
  – Use a separate cable.

➤ Respect the allowed cable lengths.

➤ The ionisation probe is not protected against the risk of electrocution; it must be protected against any accidental contact.

➤ The grounding of the burner must be in compliance with the rules in force; the grounding of the boiler alone is not enough.

➤ Position the ignition electrode and the ionisation probe so that the ignition spark cannot form an arc on the probe (risk of electric overcharge).

Technical data

Control box	Mains voltage	AC 230 V -15 % / +10 %
	Mains frequency	50 / 60 Hz ±6 %
	Power absorption	< 30 W (normal)
	Safety class	I, with components in compliance with II and III, according to DIN EN 60730-1
Load on 'input' terminals	F1 unit fuse (internal)	6,3 AT
	Main fuse of perm. network (external)	Max. 16 AT
	Undervoltage – Safety switch-off from operating position to mains voltage – Restart when mains voltage picks up	 < AC 186 V > AC 195 V
	Input currents and input voltages – UeMax – UeMin – Iemax – IeMin	 UN +10% UN -15% 1.5 mA peak 0.7 mA peak
	Voltage detection – On – Off	 AC 180...253 V < AC 80 V
Load on 'output' terminals	**Total load on the contacts** – Mains voltage – Total unit input current (safety circuit) - Fan motor contactor - Ignition transformer - Valve	 AC 230 V, 50 / 60 Hz Max. 5 A
	Single contact loading Fan motor contactor – Rated voltage – Nominal current – Power factor	 AC 230 V, 50 / 60 Hz 2A cosφ > 0.4
	Alarm output – Rated voltage – Nominal current – Power factor	 AC 230 V, 50 / 60 Hz 1A cosφ > 0.4
	Ignition transformer – Rated voltage – Nominal current – Power factor	 AC 230 V, 50 / 60 Hz 2A cosφ > 0.2
	Fuel valve – Rated voltage – Nominal current – Power factor	 AC 230 V, 50 / 60 Hz 2A cosφ > 0.4
	Display operation – Rated voltage – Nominal current – Power factor	 AC 230 V, 50 / 60 Hz 0,5A cosφ > 0.4

Cable lengths	– Main line AC 230 V	Max. 100 m (100 pF / m)
	– Display, BCI	For installation under the casing of the burner or in the control panel max. 3 m (100 pF / m)
	– Load control (LR) X5-03	Max. 20 m (100 pF/m)
	– External reset button	Max 20 m (100 pF/m)
	– Safety valve (SV)	Max 20 m (100 pF/m)
	– Load output	Max. 10 m (100 pF/m)
	– Fuel valve	Max. 3 m (100 pF/m)
	– Pilot valve	Max. 3 m (100 pF/m)
	– Ignition transformer	Max. 3 m (100 pF/m)
	– Other lines	Max. 3 m (100 pF/m)
Cross-sections of the power supply lines	They should be sized for rated currents as per the primary external fuse and the fuse of the internal unit.	
	– Min. cross-section	(max. 6.3 AT)
	– Fuses used inside the control box F1	0.75 mm² 6.3 AT DIN EN 60127 2 / 5
Environmental conditions	**Storage**	DIN EN 60721-3-1
	– Climatic conditions	Class 1K3
	– Mechanical conditions	Class 1M2
	– Temperature range	-20 ... +60 °C
	– Humidity	< 95% RH
	Transport	DIN EN 60721-3-2
	– Climatic conditions	Class 2K2
	– Mechanical conditions	Class 2M2
	– Temperature range	-30 ... +60 °C
	– Humidity	< 95% RH
	Operation	DIN EN 60721-3-3
	– Climatic conditions	Class 3K3
	– Mechanical conditions	Class 3M3
	– Temperature range	-20 ... +60 °C
	– Humidity	< 95% RH

Tab. G

ATTENTION

Condensation, formation of ice and the entrance of water are not permitted!

4.11 Operation sequence of the burner

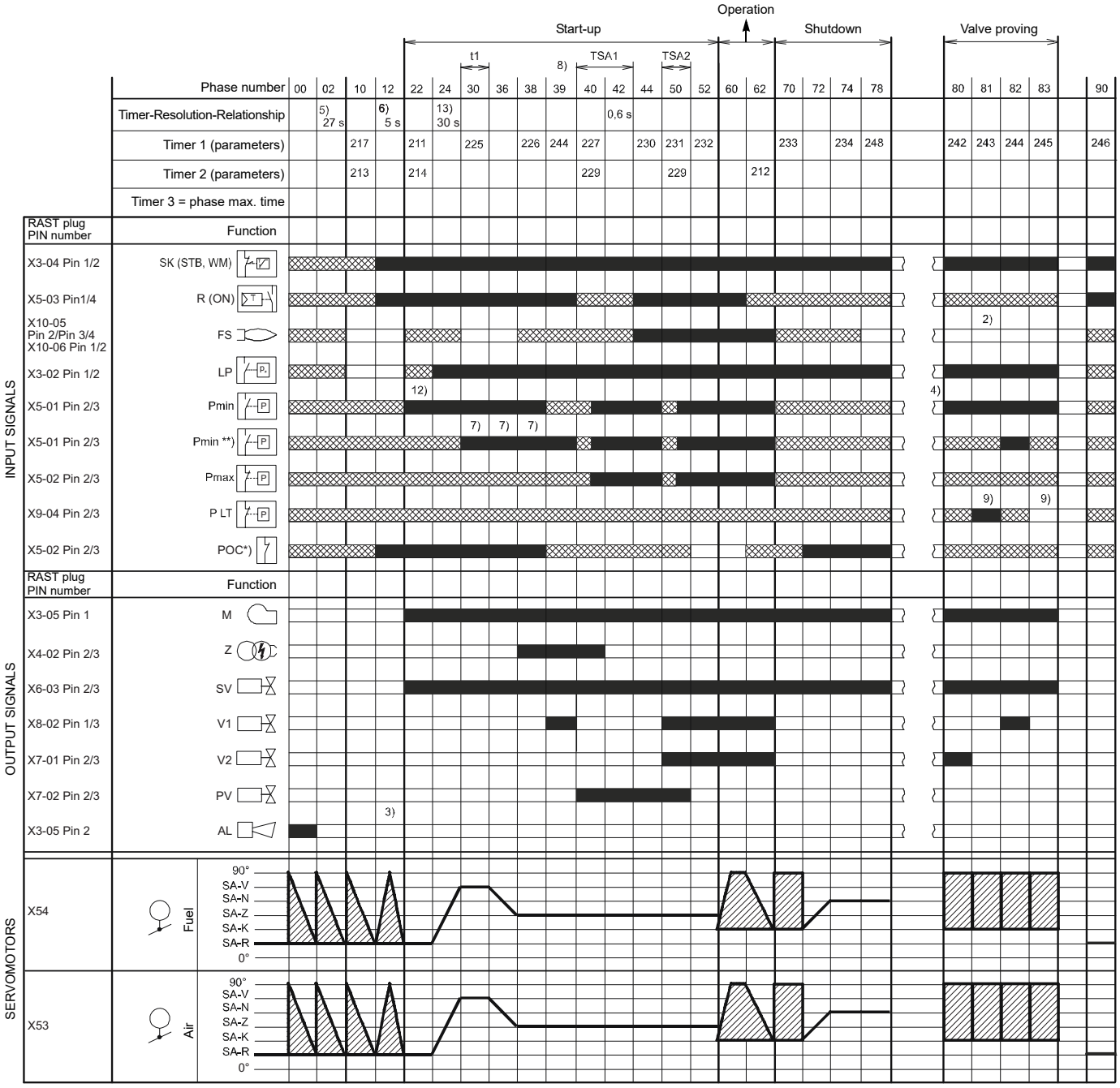

S9628

Fig. 7

Signal ON

Signal OFF

Both states are allowed

4.11.1 List of phases

Phase	Description
Ph00	Lockout phase
Ph02	Safety phase
Ph10	Closing paused
Ph12	Standby
Ph22	Fan motor(MV) = ON Safety valve (VS) = ON
Ph24	The burner moves to the pre-purging position
Ph30	Pre-purging time
Ph36	The burner moves to the ignition position
Ph38	Ignition phase (TA) = ON
Ph39	Minimum gas pressure switch test (PGmin.)
Ph40	Fuel valve (V) = ON
Ph42	Ignition (TA) = OFF

Phase	Description
Ph44	t44 = interval time 1
Ph60	Operation
Ph62	The burner moves to the switching off position
Ph70	t13 = post-combustion time
Ph72	The burner moves to the post-purging position
Ph74	t8 = post-purging time
Ph78	t3 = post-purging time
Ph80	Emptying time (valve leak detection)
Ph81	Atmospheric time test (valve leak control)
Ph82	Filling time (valve leak detection)
Ph83	Pressure test time (valve leak detection)
Ph90	Standby time due to lack of gas

4.12 Operator panel operation

The control box REC 27 .../REC37 ... is connected directly to the operator panel (Fig. 8).

The buttons allow you to programme the operation and diagnostics menus.

The burner management system is shown on the LCD display (Fig. 9). To simplify the diagnostics, the display shows the operating status, type of problem, and when the problem arose.

ATTENTION

- ➤ Observe the procedures and adjustments shown below.
- ➤ All interventions (assembly and installation operations, assistance, etc.) must be carried out by qualified personnel.
- ➤ If the display and operator panel are dirty, clean them with a dry cloth.
- ➤ Protect the panel from excessive temperatures and liquids.

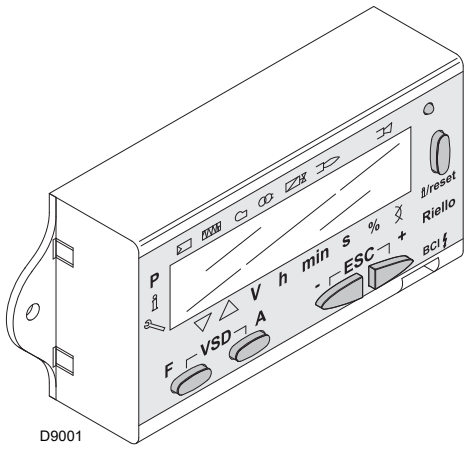

Fig. 8

4.12.1 Description of the symbols on the display

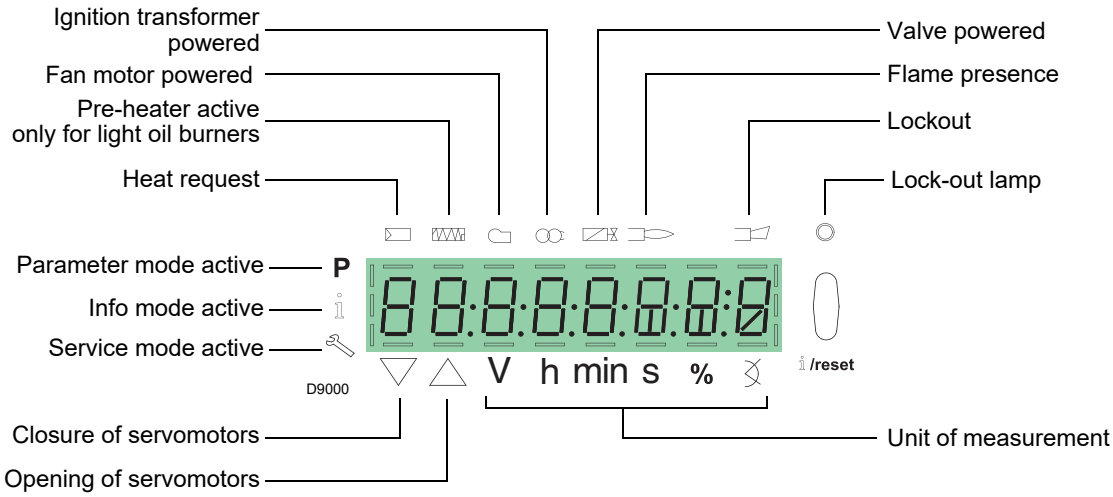

Fig. 9

The brightness of the display can be adjusted from 0 ... 100% with the parameter 126.

4.12.2 Description of the buttons

Button	Button	Function
F	**Button F**	To adjust the fuel servomotor (keep F pressed and adjust the value by pressing - or +)
A	**Button A**	To adjust the air servomotor (keep A pressed and adjust the value by pressing - or +)
VSD F A	**Buttons A and F VSD function**	To change the mode setting parameter P (simultaneously press F and A plus - or +
i /reset	**Button Info and Enter**	• **Enter** in Parameters Mode • **Reset** in the event of a lockout • Access to a lower level of the menu • To navigate in **Mode Info** or **Service** and permits: - the selection of the parameter (flashing symbol)(press for <1 s) - access to a lower level of the menu (press from 1...3 s) - access to a higher level of the menu (press from 3...8 s) - access to another Mode (press for > 8 s)
-	**Button -**	Lowering the value – Access to a lower point of the modulation curve – Scrolling the parameter list
+	**Button +**	Increasing the value – Access to a higher point of the modulation curve – Scrolling the parameter list
ESC - +	**Buttons - and +**	Quit function (ESC) (press - and + simultaneously) – Does not confirm the value – Access to a higher level of the menu

Tab. H

4.13 Servomotor (SQM33....)

Important notes

ATTENTION

To avoid accidents, material or environmental damage, observe the following instructions!

Avoid opening, modifying or forcing the servomotor.

- ➤ All interventions (assembly and installation operations, assistance, etc.) must be carried out by qualified personnel.
- ➤ Before modifying the wiring in the servomotor connection area, fully disconnect the burner control device from the power supply (omnipolar separation).
- ➤ To avoid the risk of electrocution, protect the connection terminals in a suitable manner and correctly fix the cover.
- ➤ Check the wiring is in order.
- ➤ Falls and collisions can negatively affect the safety functions. In this case, the unit must not be operated, even if it displays no evident damage.

Assembly notes

- ➤ Check the relevant national safety standards are respected.
- ➤ The connection between the actuator command shaft and the control element must be rigid, without any mechanical play.
- ➤ To avoid an excessive load on the bearings due to rigid hubs, the use of compensation clutches without any mechanical play is recommended (e.g. metal bellows-type clutches).

Installation notes

- ➤ Arrange the H.V. ignition cables separately, as far as possible from the control box and the other cables.
- ➤ To avoid the risk of electrocution, make sure that the 230V AC section of the servomotor is fully separated from the functional low-voltage section.
- ➤ The static torque is reduced when the electrical supply of the actuator is switched off.
- ➤ The housing cover may only be removed for short periods of time for wiring or when making the addressing. In similar cases, make sure that dust or dirt does not penetrate inside the actuator.
- ➤ The servomotor comprises a PCB with ESD-sensitive components.
- ➤ The top side of the board carries a cover which affords protection against direct contact. This protective cover must not be removed! The underside side of the board must not be touched.

ATTENTION

During the maintenance or replacement of the servomotors, be careful not to invert the connectors.

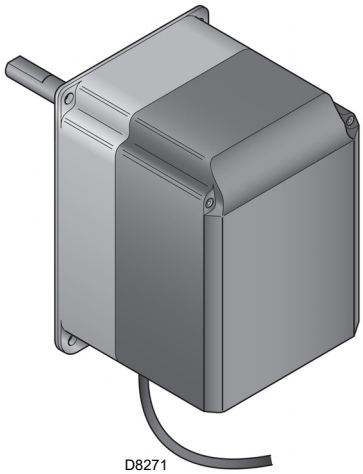

Fig. 10

Technical data

Model	**SQM33.5...**
Operating voltage	AC / DC 24V ± 20%
Safety class	2 according to EN 60 730
Power absorption	Max. 10 W
Protection level	IP54 in compliance with EN 60 529-1
Cable connection	RAST2,5, connectors
Rotation direction	- GAS servomotor: clockwise - Air servomotor: anticlockwise ATTENTION: The rotation direction is set in the factory using the control box parameter REC ...
Rated torque (max.)	3 Nm
Static torque (max.)	3 Nm
Operation time (min.) for 90°	5....120 s.
Weight	approx. 1.4 kg
Environmental conditions:	
Operation	DIN EN 60 721-3-3
Climatic conditions	Class 3K5
Mechanical conditions	Class 3M4
Temperature range	-20...+60°C
Humidity	< 95% rh

Tab. I

ATTENTION

Condensation, the formation of ice and the entry of water are prohibited!

5 Installation

5.1 Notes on safety for the installation

After carefully cleaning all around the area where the burner is to be installed, and arranging for the environment to be illuminated correctly, proceed with the installation operations.

DANGER

All the installation, maintenance and disassembly operations must be carried out with the electricity supply disconnected.

ATTENTION

The installation of the burner must be carried out by qualified personnel, as indicated in this manual and in compliance with the standards and regulations of the laws in force.

DANGER

Combustion air inside the boiler must be free from hazardous mixes (e.g.: chloride, fluoride, halogen); if present, it is highly recommended to carry out cleaning and maintenance more frequently.

5.2 Handling

The packaging of the burner includes a wooden platform, so it is possible to move the burner (still packaged) with a transpallet truck or fork lift truck.

ATTENTION

The handling operations for the burner can be highly dangerous if not carried out with the greatest attention: keep any unauthorised people at a distance; check the integrity and suitableness of the available means of handling.
Check also that the area in which you are working is empty and that there is an adequate escape area (i.e. a free, safe area to which you can quickly move if the burner should fall).
When handling, keep the load at not more than 20-25 cm from the ground.

After positioning the burner near the installation point, correctly dispose of all residual packaging, separating the various types of material.

CAUTION

Before proceeding with the installation operations, carefully clean all around the area where the burner will be installed.

5.3 Preliminary checks

Checking the consignment

CAUTION

After removing all the packaging, check the integrity of the contents. In the event of doubt, do not use the burner; contact the supplier.

The packaging elements (wooden cage or cardboard box, nails, clips, plastic bags, etc.) must not be abandoned as they are potential sources of danger and pollution; but should be collected and disposed of in the appropriate places.

Checking the characteristics of the burner

Check the identification label of the burner (Fig. 11), showing:

A the burner model;
B the burner type;
C the cryptographic year of manufacture;
D the serial number;
E the data for electrical supply and the protection level;
F the electrical power consumption;
G the types of gas used and the relative supply pressures;
H the data of the burner's minimum and maximum output possibilities (see Firing rate).
Warning: the burner output must be within the boiler's firing rate.
I the category of the appliance/countries of destination;
J degree of electric protection;
K burner weight;
L short circuit current;
M maximum current absorbed.

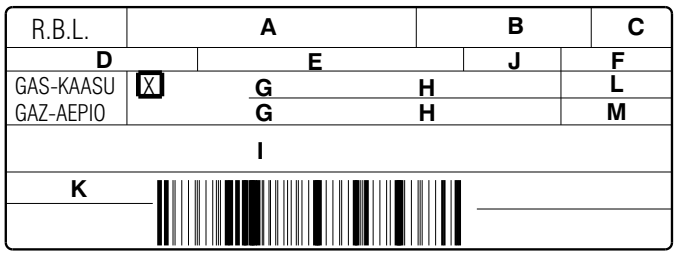

20157569

Fig. 11

ATTENTION

A burner label, or any other component, that has been tampered with, removed or is missing, prevents the definite identification of the burner and makes any installation or maintenance work difficult.

5.4 Operating position

ATTENTION

- The burner is designed to operate only in positions **1**, **2**, **3** and **4** (Fig. 12).
- Installation **1** is preferable, as it is the only one that allows the maintenance operations as described in this manual.
- Installations **2**, **3** and **4** permit operation but make maintenance and inspection of the combustion head more difficult.

DANGER

- Any other position could compromise the correct operation of the appliance.
- Installation **5** is prohibited for safety reasons.

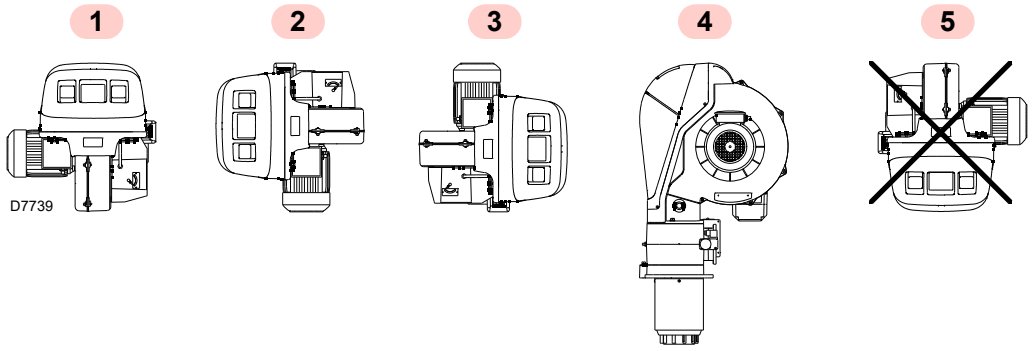

Fig. 12

5.5 Preparing the boiler

5.5.1 Boring the boiler plate

Drill the combustion chamber locking plate as shown in Fig. 13 (Tab. J).

The position of the threaded holes can be marked using the thermal screen supplied with the burner.

5.5.2 Blast tube length

The length of the head must be selected according to the indications provided by the manufacturer of the boiler, and in any case the combustion area must be greater than the thickness of the boiler door complete with refractory.

The available length is shown in Fig. 13.

ATTENTION

The burners cannot be used on flame inversion boilers.

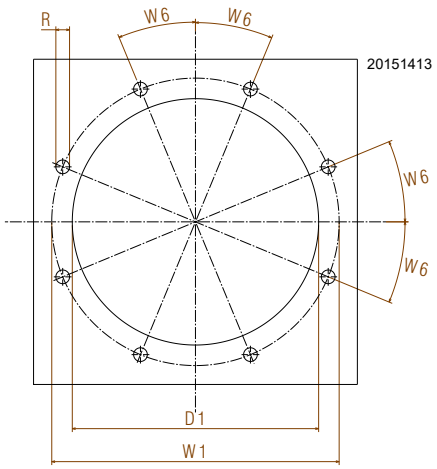

Fig. 13

mm	D1	W1	R	W6
RX 1500 S/E	370	470	M16	22.5°

Tab. J

5.6 Securing the burner to the boiler

Prepare a suitable lifting system.

➤ Install the burner to the boiler 1)(Fig. 14) fastening the flange 5) to the door of the boiler, interposing the insulating gasket 3) and tighten with the nuts 4).
➤ Check the correct positioning of the insulating gasket; the black side must be faced the burner flange and the white one to the boiler side.
➤ Insert the head assembly on the previously prepared boiler hole and fix with the M16 screws or nuts 2).

ATTENTION

The seal between burner and boiler must be airtight.

ATTENTION

After start-up of the burner check that there is no leakage of fumes into the external environment.

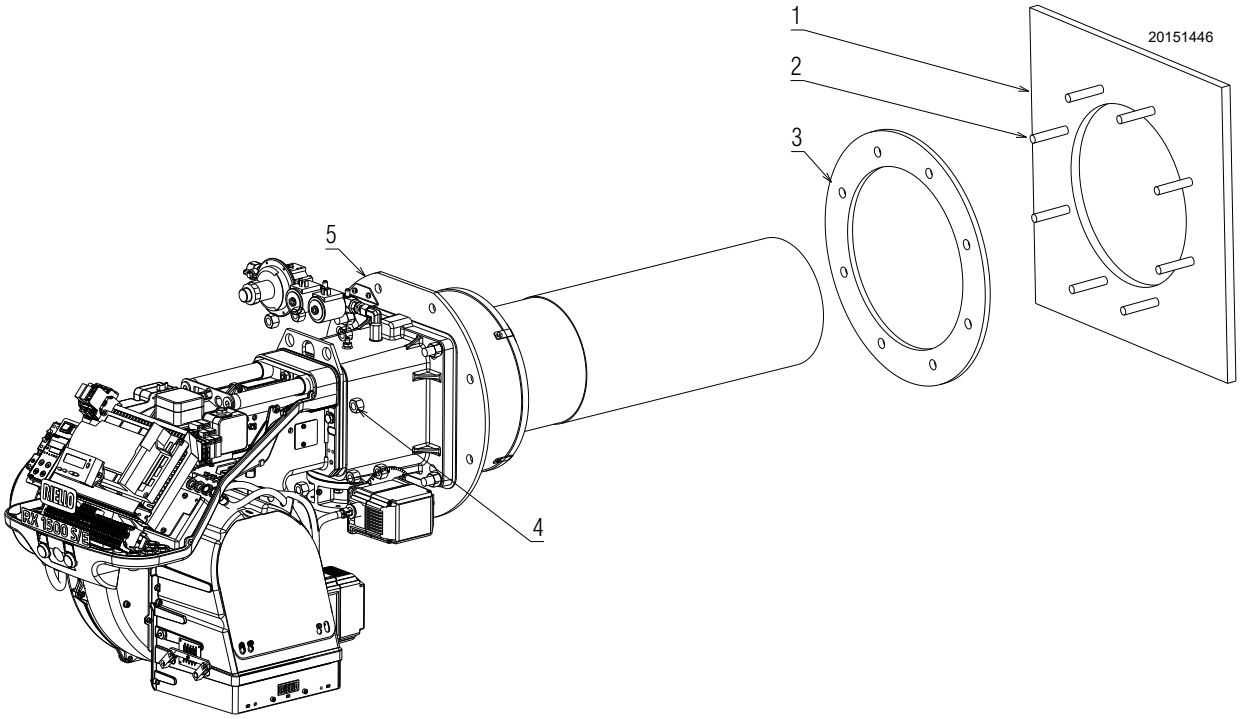

Fig. 14

5.7 Electrode and flame sensor positioning

ATTENTION

Check that the electrode is positioned as in Fig. 15, respecting the indicated dimensions.

ATTENTION

Check the seal of the plate 6)(Fig. 15).

The burner is equipped with a flame sensor 1)(Fig. 15). This is fixed on an adaptor 2) with glass 3) and gasket 4). The adaptor 2) allows to cool the fixing area of the sensor.

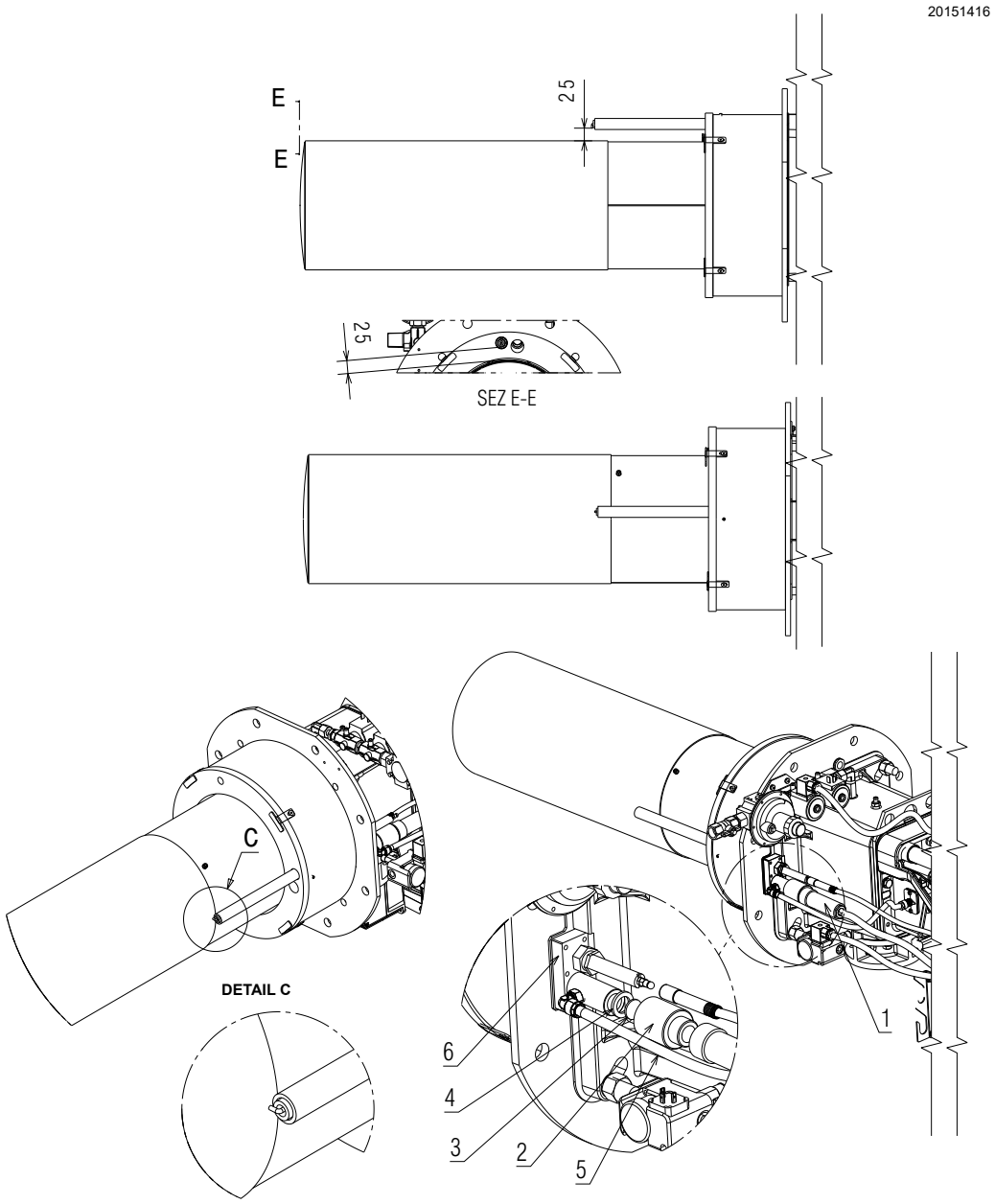

Fig. 15

5.8 Gas line

Explosion danger due to fuel leaks in the presence of a flammable source.

Precautions: avoid knocking, attrition, sparks and heat.

Make sure the fuel interception tap is closed before performing any operation on the burner.

ATTENTION

The fuel supply line must be installed by qualified personnel, in compliance with current standards and laws.

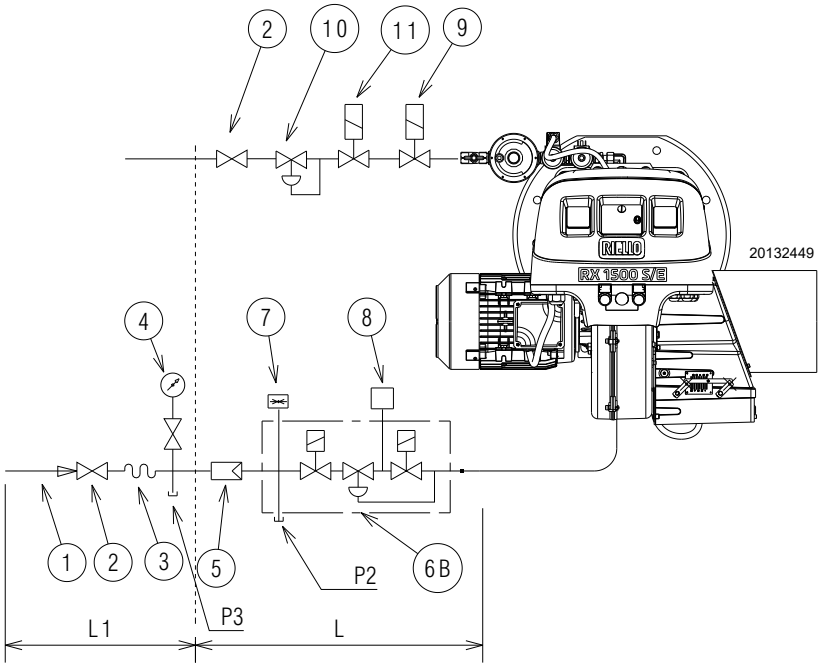

Fig. 16

Key (Fig. 16)
1 Gas input pipe
2 Manual valve
3 Vibration damping joint
4 Pressure gauge with push-button cock
5 Filter
6B Includes:
– working valve
– safety valve
– pressure adjuster
7 Minimum gas pressure switch
8 Leak detection control, provided as an accessory or integrated, based on the gas train code. In compliance with the EN 676 standard, the leak detection control is compulsory for burners with maximum outputs over 1200 kW.
9 Second pilot safety valve
10 Pilot pressure adjuster
11 First pilot safety valve
P2 Upstream pressure of valves/adjuster
P3 Upstream pressure of the filter
L Gas train, supplied separately
L1 The responsibility of the installer

TRAINS		BURNER	CODE
MODEL	∅ INPUT		
VGD 50/1	2”	RX 1500	20137718

Tab. K

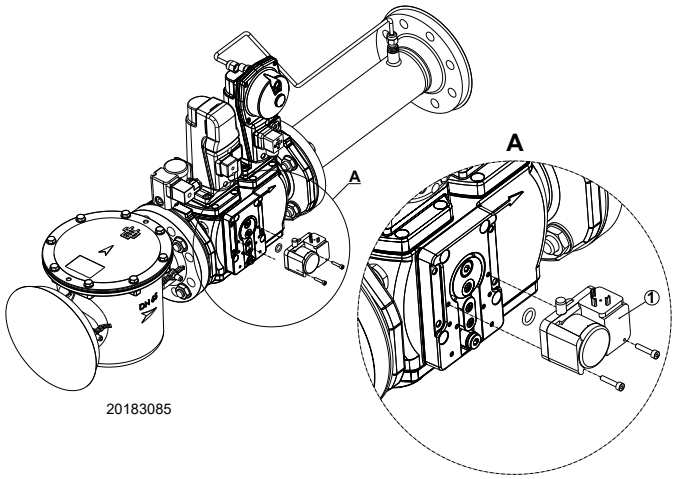

Fig. 17

ATTENTION

Install the gas pressure switch 1)(Fig. 17) supplied as equipment to activate the valve leak detection control device.

5.8.1 Gas train

Approved according to standard EN 676 and provided separately from the burner. It is recommended to use the gas train indicated in Tab. K on page 22.

Gas train installation

DANGER

Disconnect the electrical power using the main switch.

Check that there are no gas leaks.

Pay attention when handling the train: danger of crushing of limbs.

Make sure that the gas train is properly installed by checking for any fuel leaks.

ATTENTION

Refer to the accompanying instructions for the adjustment of the gas train.

The operator must use the required equipment during installation.

The gas train can enter the burner from the right or left side, depending on which is the most convenient.

➤ The gas train must be connected to the gas attachment 1)(Fig. 18) with the flange 2), the gasket 3) and the screws 4) supplied with the burner.

➤ The gas solenoids must be as close as possible to the burner, to ensure that the gas reaches the combustion head within the Safety time of 3s.

➤ Ensure that the maximum pressure necessary for the burner is included in the calibration field of the pressure regulator (colour of the spring).

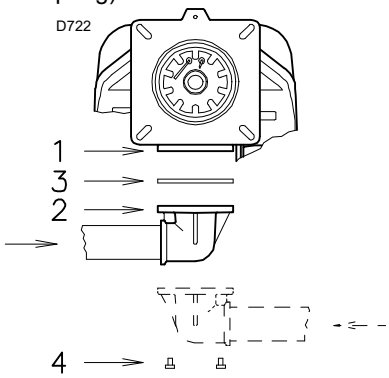

Fig. 18

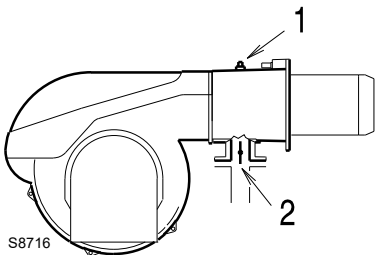

Fig. 19

5.8.2 Gas pressure

Tab. L allows to identify the power delivered by the burner based on the pressure measured at the test point 1)(Fig. 19).

kW	1 Δp (mbar)
	2.4
755	2.8
910	4.1
1050	5.4
1100	5.9
1200	7.1
1350	8.9
1450	10.3
1500	10.0
1650	13.3
1830	15.3

Tab. L

The values shown in Tab. L refer to:
– Natural gas G 20 NCV 9.45 kWh/Sm^3 (8.2 Mcal/Sm^3)

Column 1
Gas pressure measured at the test point 1)(Fig. 19), with:
- Combustion chamber at 0 mbar;
- Burner working at maximum output.

Calculate the approximate maximum output of the burner in this way:
– subtract the combustion chamber pressure from the gas pressure measured at test point 1)(Fig. 19).
– Find, inTab. L related to the burner concerned, the pressure value closest to the result of the subtraction.
– Read the corresponding output on the left.

Example with natural gas G20:

Maximum output operation		
Gas pressure at test point 1)(Fig. 19)	=	16.3 mbar
Pressure in combustion chamber	=	1.0 mbar
16.3 - 1.0	=	15.3 mbar

A pressure of 15.3 mbar, (column 1, corresponds in Tab. L to an output of 1830 kW.

This value serves as a rough guide; the effective output must be measured at the gas meter.

ATTENTION

The heat output and gas pressure in the head data refer to operating with the gas butterfly valve fully open (90°).

5.8.3 Pilot gas train installation

Insert the pilot train A) (Fig. 20) on the connector B) and tighten the nut to the end.
Check the presence of the internal seal ogive to the connector.

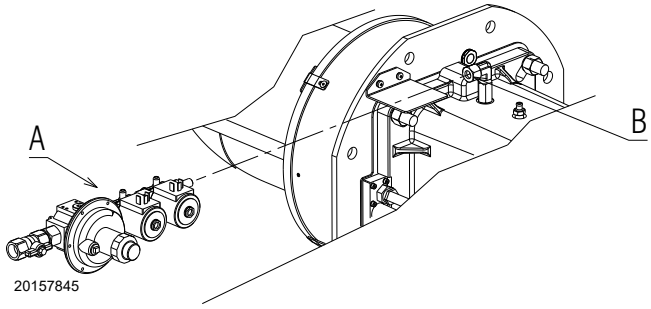

Fig. 20

5.9 Electrical wiring

Notes on safety for the electrical wiring

DANGER

- ➤ The electrical wiring must be carried out with the electrical supply disconnected.
- ➤ Electrical wiring must be made in accordance with the regulations currently in force in the country of destination and by qualified personnel. Refer to the wiring diagrams.
- ➤ The manufacturer declines all responsibility for modifications or connections different from those shown in the wiring diagrams.
- ➤ Check that the electrical supply of the burner corresponds to that shown on the identification label and in this manual.
- ➤ The FS1 burners have been set for intermittent operation.
  This means that the burner should compulsorily be stopped at least once every 24 hours to enable the electric control box to check its own safety and efficiency at start-up.
  Normally, burner stopping is guaranteed by the boiler's thermostat/pressure switch. If this is not the case, a time switch should be fitted in series to TL to stop the FS1 burner at least once every 24 hours. Refer to the wiring diagrams.
- ➤ The electrical safety of the device is obtained only when it is correctly connected to an efficient earthing system, made according to current standards. It is necessary to check this fundamental safety requirement. In the event of doubt, have the electrical system checked by qualified personnel. Do not use the gas tubes as an earthing system for electrical devices.
- ➤ The electrical system must be suitable for the maximum power absorption of the device, as indicated on the label and in the manual, checking in particular that the section of the cables is suitable for that level of power absorption.
- ➤ For the main power supply of the device from the electricity mains:
  - do not use adapters, multiple sockets or extensions;
  - make provisions for an omnipolar switch with a gap between the contacts of at least 3 mm (over-voltage category III), as required by current safety regulations.
- ➤ Do not touch the device with wet or damp body parts and/or in bare feet.
- ➤ Do not pull the electric cables.
- ➤ Check the electric wiring inside the boiler complies with the national and local safety regulations.
- ➤ Live and neutral should not be mixed up (this could cause dangerous malfunctions, a loss of protection against electric shocks, etc...).
- ➤ Make sure the cable grommets of the connected cables comply with the relevant standards (e.g. EN60730 and EN60335).
- ➤ When wiring the unit, make sure that AC 230V mains voltage cables are run strictly separate from extra low-voltage cables to avoid risks of electrical shock hazard.

Before carrying out any maintenance, cleaning or checking operations:

DANGER

Turn off the burner's electrical supply using the main system switch.

DANGER

Turn off the fuel interception tap.

DANGER

Avoid condensate, ice and water leaks from forming.

If the hood is still present, remove it and proceed with the electrical wiring according to the wiring diagrams.
Use flexible cables in compliance with the EN 60 335-1 standard.

After carrying out maintenance, cleaning or checking operations, reassemble the cover and all the safety and protection devices of the burner.

5.9.1 Supply cables and external connections passage

All the cables to be connected to the burner must be threaded through cable grommets.

The use of the cable grommets can take various forms; by way of example see Fig. 21.

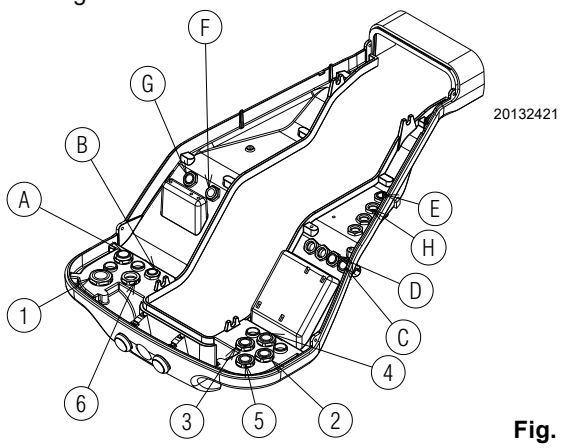

Fig. 21

Key (Fig. 21)

1 Electrical supply
2 Consents and safety devices
3 Minimum gas pressure switch
4 VPS gas valve leak detection control kit
5 Gas train
6 Available

A Fan motor
B Maximum gas pressure switch
C Gas servomotor
D Air servomotor
E Pilot valve
F Flame sensor
G Ignition electrode
H Silicon tube for air pressure switch

5.10 Calibration of the thermal relay

The thermal relay is used to avoid damage to the motor owing to a strong increase in absorption or the lack of a phase. For the calibration 2)(Fig. 22), refer to the table given in electrical layout.

If the minimum value of the scale of the thermal relay is greater than the rating absorption of the motor, protection is still ensured. This arises when the power supply of the motor is 400V.

To reset, in the case of an intervention of the thermal relay, press the button “**RESET**” 1).

The button “**STOP**” 3) opens the NC (95-96) contact and stops the motor.

To test the thermal relay, insert a screwdriver in the window “**TEST/TRIP**” 4) and move it in the sense of the arrow (towards right).

ATTENTION

Automatic resetting can be dangerous.

This action is not provided for the burner operation.

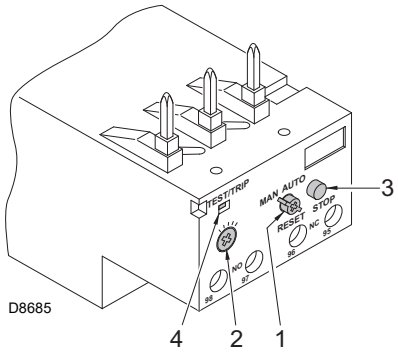

Fig. 22

5.11 Filter kit installation

To install the filter kit please consult the instruction provided.

Below, the main steps (Fig. 23):

- ➤ remove the sound damping inside the air intake 6)(Fig. 23);
- ➤ loosen the screws 1);
- ➤ remove the screw 2);
- ➤ remove the cover 3);
- ➤ insert the filter 4) inside the burner air intake 6) and rotate clockwise to fix it;
- ➤ fix the cover 5) with the screws 1) and 2).

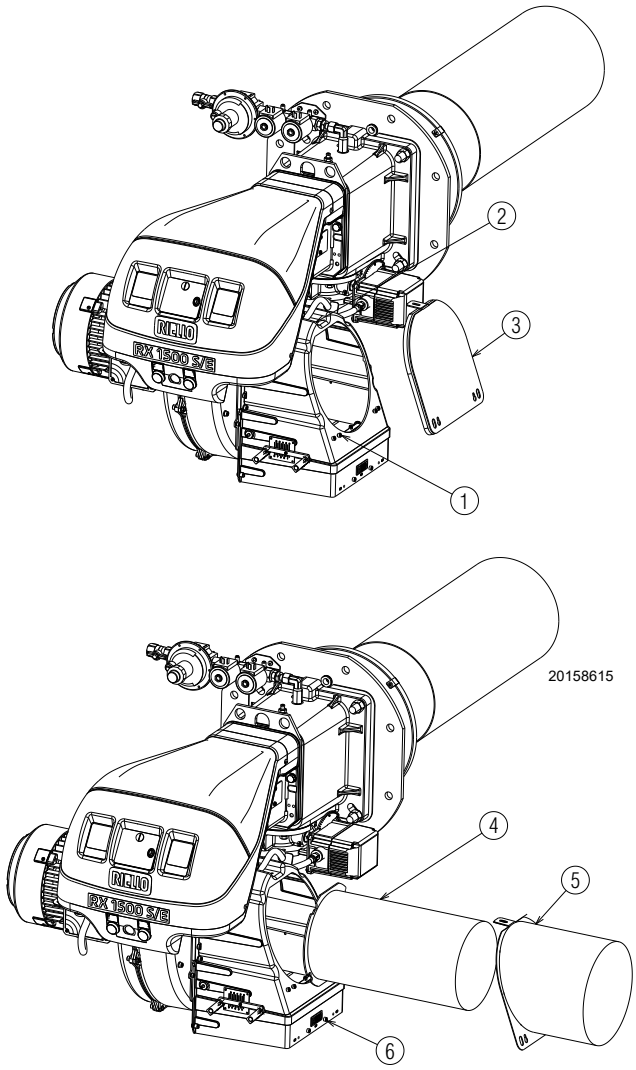

Fig. 23

6 Start-up, calibration and operation of the burner

6.1 Notes on safety for the first start-up

ATTENTION

The first start-up of the burner must be carried out by qualified personnel, as indicated in this manual and in compliance with the standards and regulations of the laws in force.

ATTENTION

Check the correct working of the adjustment, command and safety devices.

ATTENTION

Before igniting the burner, see the paragraph "Safety test - with gas feeding closed" on page 45.

6.2 Adjustments prior to ignition

The following adjustments must be made:

- ➤ open manual valves upstream from the gas train.
- ➤ Adjust the minimum gas pressure switch to the start of the scale.
- ➤ Adjust the maximum gas pressure switch to the end of the scale.
- ➤ Adjust the air pressure switch to the start of the scale.
- ➤ Adjust the air pressure switches for the filter control to the start of the scale.
- ➤ Adjust all pressure switches for the leak detection control according to the instructions supplied with the kit.
- ➤ Purge the air from the gas line.
  We recommend using a plastic tube routed outside the building and to purge air until gas is smelt.
- ➤ Fit a U-type pressure gauge or a differential pressure gauge (Fig. 24), with socket (+) on the gas pressure of the pipe coupling and (-) in the combustion chamber.
- ➤ Connect two lamps or testers to the two gas line solenoids to check the exact moment in which voltage is supplied. This operation is unnecessary if each of the two solenoids is equipped with a pilot light that signals voltage passing through.

CAUTION

Before starting up the burner, it is good practice to adjust the gas train so that ignition takes place in conditions of maximum safety, i.e. with gas delivery at the minimum.

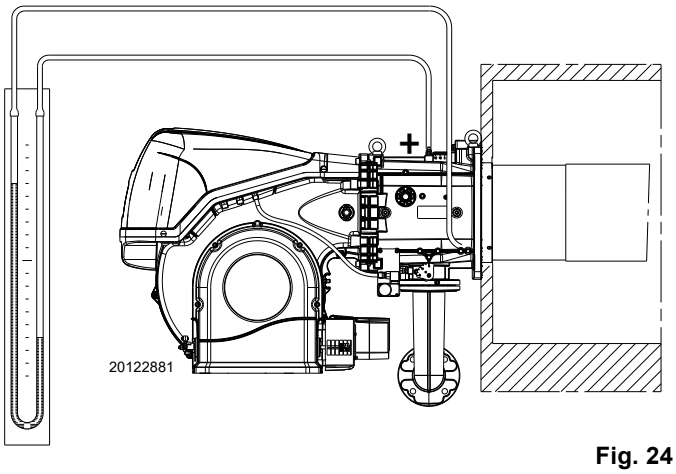

Fig. 24

6.3 Burner start-up

Electrically power the burner using the disconnecting switch on the boiler panel.

Close the thermostats/pressure switches and set the switch of Fig. 25 to "1/ON".

DANGER

Make sure that the lights or testers connected to the solenoids, or the pilot lights on the solenoids themselves, indicate that no voltage is present.

If voltage is present, stop the burner immediately and check the electrical connections.

As the burner is not fitted with a phase sequence control device, the motor rotation may be incorrect.

As soon as the burner starts up, go in front of fan motor cooling fan and check it is rotating anticlockwise.

If this is not the case:

- put the switch of Fig. 25 to "2/OFF" and wait until the control box carries out the switching off phase;
- disconnect the burner form the electrical supply.

DANGER

Invert the phases on the three-phase power supply.

This operation must be carried out with the electrical supply disconnected.

Follow the "**Start-up procedure**" on page 35.

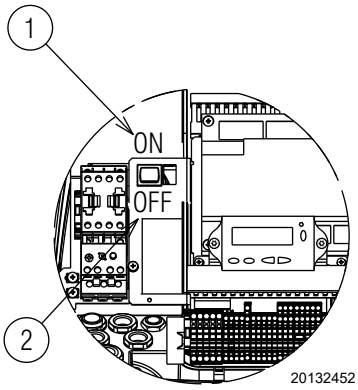

Fig. 25

6.4 Burner adjustment

The optimum adjustment of the burner requires an analysis of flue gases at the boiler outlet.

Adjust in sequence:
1 - Pilot flame
2 - MAX output
3 - MIN output
4 - Intermediate outputs between Min. and Max.
5 - Air pressure switch
6 - Maximum gas pressure switch
7 - Minimum gas pressure switch

6.5 Ignition pilot adjustment

The pilot works correctly at pressures ranging from 9 - 20 mbar.

Important

To set the pilot without main burner operation, proceed as follows.

Un-programmed unit (OFF Upr)
– When appears P0 flashing in the display, set air actuator between 0° to 10°.
– Set the pilot pressure.

Programmed unit (OFF)
– Set parameter 208 (Program stop) to 3 Interval 1 (Ph44).
– With the burner in the manual position, set air actuator between 0° to 10°.
– Set the pilot pressure after the ignition.
– When the setting is correct, set parameter 208 back to 0 = deactivated.

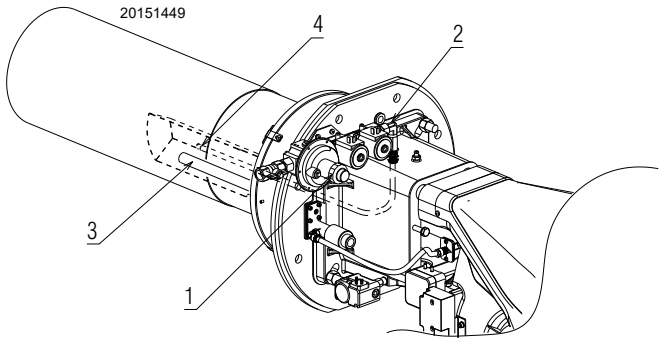

Fig. 26

Key (Fig. 26)
1 Pressure adjuster
2 Pressure test point
3 External electrode
4 Internal pilot pipe

6.6 Air / fuel adjustment

Air/fuel synchronisation is carried out with the relevant air and gas servomotors by logging a calibration curve by using the electronic cam.

It is advisable, to reduce the loss and for a wide calibration field, to adjust the servomotors to the maximum of the output used, the nearest possible to the maximum opening (90°).

On the gas butterfly valve, the fuel step according to the burner output required, with servomotor completely open, is carried out by the pressure stabiliser on the gas train.

6.6.1 Air adjustment for maximum output

Adjust the servomotor to maximum opening (nearly 90°) so that the air butterfly valves are entirely open 17)(Fig. 5 on page 10).

6.6.2 Air/fuel adjustment and output modulation system

The air/gas regulator and output modulation system equipping **RX S/E** series burners performs a number of integrated functions to optimise burner function, in both individual installations and in combination with other units (e.g. double furnace boiler or multiple heat generators in parallel).

The basic system functions control:
1 The dosage of the air and fuel through positioning using direct servo commands of the relevant valves eliminating the possible play in the calibration systems with mechanical cam lever mechanisms, used on traditional modulating burners.
2 The modulation of the burner output in accordance with the load required by the system, with maintenance of the pressure or temperature of the boiler at the operating values set.
3 The sequence (cascade adjustment) of more than one boiler through the suitable connection of the various units and the activation of the internal software of the individual systems (option).

Further interfaces and communication functions with computers, for remote control or integration in central supervision systems are available on the basis of the configuration of the system.

ATTENTION

The first start up and every further internal setting operation of the adjustment system or the expansion of the base functions require access by means of password and are to be carried out by service personnel who are especially trained for the internal programming of the instrument and the specific application created with this burner.

6.7 Final adjustment of the pressure switches

6.7.1 Air pressure switch

Adjust the air pressure switch (Fig. 27) after performing all other burner adjustments with the air pressure switch set to the start of the scale.

With the burner operating at minimum output, insert a combustion analyser in the stack, slowly close the suction inlet of the fan (for example, with a piece of cardboard) until the CO value does not exceed 100 ppm.

Slowly turn the appropriate knob clockwise until the burner goes into lockout.

Check the indication of the arrow pointing upwards on the graduated scale. Turn the knob clockwise again, until the value shown on the graduated scale corresponds with the arrow pointing downwards, and so recovering the hysteresis of the pressure switch (shown by the white mark on a blue background, between the two arrows).

Now check the correct start-up of the burner. If the burner locks out again, turn the knob anti-clockwise a little bit more. During these operations it may be useful to measure the air pressure with a pressure gauge.

The connection of the pressure gauge is shown in Fig. 27. The standard configuration is that with the air pressure switch connected in absolute mode. Note the presence of a “T” connection, not supplied.

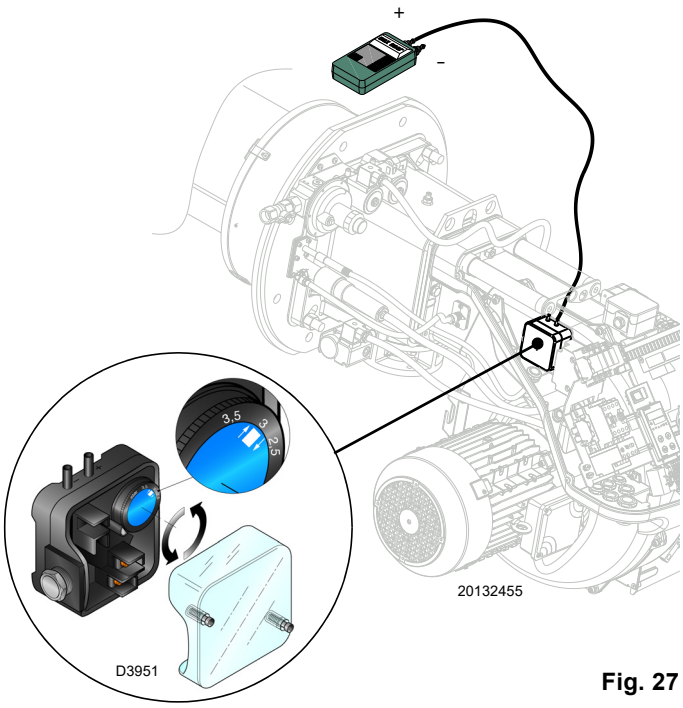

Fig. 27

6.7.2 Maximum gas pressure switch

Adjust the maximum gas pressure switch (Fig. 28) after making all other burner adjustments with the maximum gas pressure switch set to the end of the scale.

To calibrate the maximum gas pressure switch, open the tap and then connect a pressure gauge to its pressure test point.

The maximum gas pressure switch must be regulated to a value no higher than 30% of the measurement read on the gauge when the burner is working at maximum output.

After making the adjustment, remove the pressure gauge and close the tap.

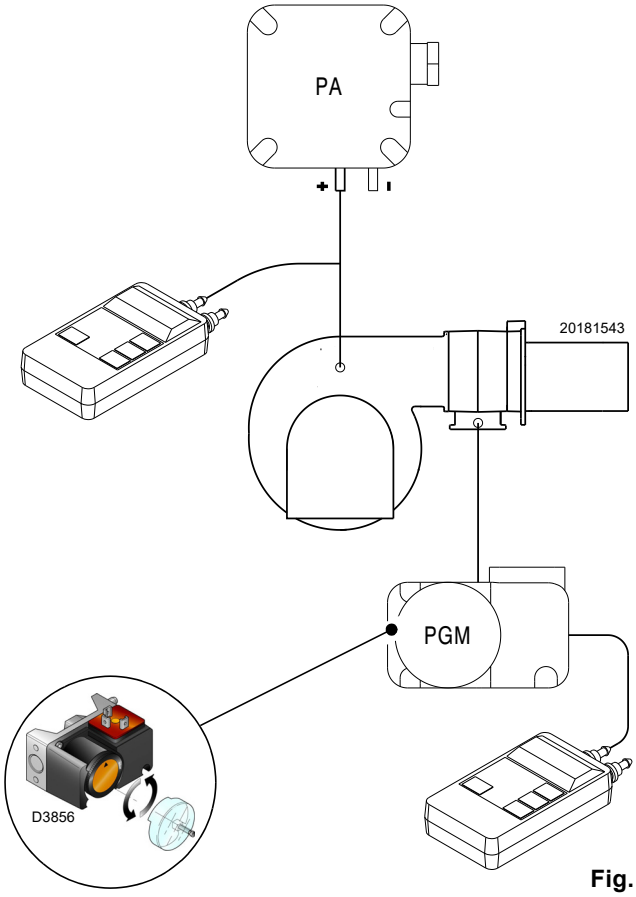

Fig. 28

6.7.3 Minimum gas pressure switch

Adjust the minimum gas pressure switch (Fig. 29) after performing all the other burner adjustments with the pressure switch set to the start of the scale.

With the burner operating at maximum output, increase adjustment pressure by slowly turning the relative knob clockwise until the burner stops.

Then turn the knob anticlockwise by 0.2 kPa (2 mbar) and repeat burner start-up to ensure it is uniform.

If the burner locks out again, turn the knob anticlockwise again by 0.1 kPa (1 mbar).

ATTENTION

1 kPa = 10 mbar

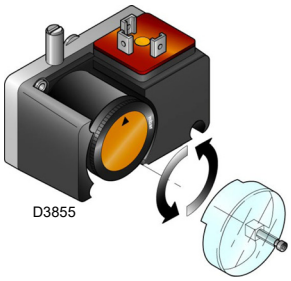

Fig. 29

6.7.4 Pressure switch for the leak detection control

Adjust the pressure switch for the leak detection control (Fig. 30) at a pressure of 50% than the inlet gas pressure.

6.7.5 Air pressure switches with intake filter

The burner wiring diagram is complete with no. 2 air pressure switches, light indicators, relays and fuses that set up the air intake filter (accessory to be ordered separately). The pressure switches are calibrated to the minimum of the scale and must NOT be modified when they are used without a filter. During ordinary operation, the no. 2 light indicators will always remain lit.

If the filter kit is installed, adjust the pressure switches according to the instructions supplied with the kit.

Calibrated the two filter air filter pressure switches in normal operation of the burner, the both pilot lights must be on.

If the Warning one is off, this means that the value of the burner air pressure is lower than the threshold set on the Warning pressure switch (remotable signal via terminal board 3)(Fig. 31).

If the Safety is also off, this means that the burner air pressure is below the threshold set on the Safety pressure switch and the burner does not ignite.

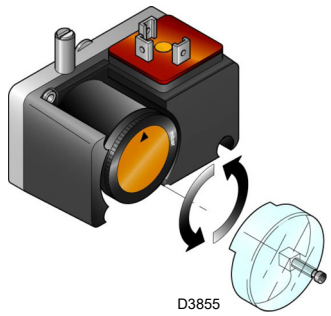

Fig. 30

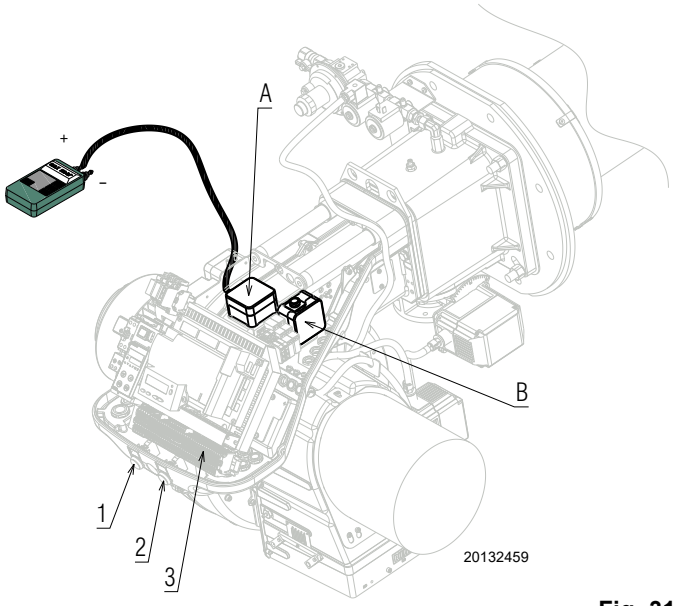

Fig. 31

Key (Fig. 31)

A Filter air pressure switch (Warning air filter)
B Filter air pressure switch (Safety air filter)
1 Indicator/Pilot light (Safety air filter)
2 Indicator/Pilot light (Warning air filter)
3 Remote signal terminal board (Warning air filter)

6.8 Visualisation and programming mode

6.8.1 Normal mode

The Normal mode is the standard operation mode visualised on the operator panel display. It is the main level of the menu.

➤ Visualises the operation conditions and allows you to modify the operation point of the burner manually.
➤ It does not require any use of the keys of the Operator Panel.
➤ It allows access to the other visualisation and programming modes.

From Normal mode you can access other levels:
– Info mode (**InFo**)
– Service mode (**SEr**)
– Parameter mode (**PArA**)

Some examples in the standard conditions are given below.

6.8.1.1 Burner in stand-by display

The burner is in the heat request waiting mode, or the selector“**0-1**” (Fig. 25 on page 26) is at “0”.

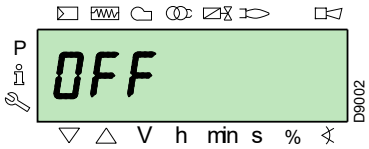

6.8.1.2 Display during starting / stopping

The display visualises the various phases of the start-up, ignition and switch-off of the burner.

In the example, the display indicates that the burner is in **Phase 30** (see diagram Fig. 32) and there are 12 seconds until the next phase.

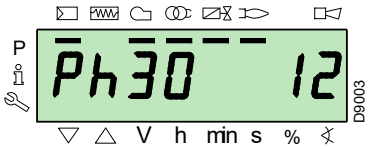

6.8.1.3 Display of the work position

The burner is working in the requested load position (in the example alongside, **78.4%**).

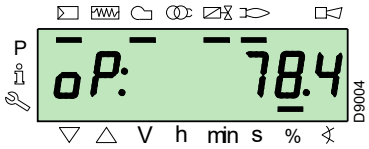

6.8.1.4 Error state message, display of the errors and information

The display visualises alternately the error code (in the example **c: 12**) and the relative diagnostic (in the example **d: 0**).

The system goes into safety mode and the message shown in the next figure appears.

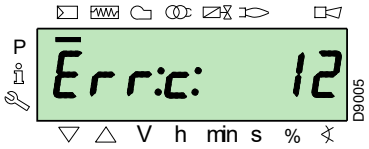

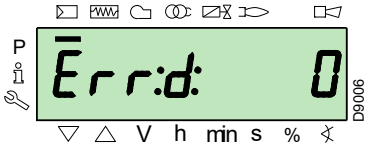

The burner goes into lockout.

The display visualises alternately the lockout code (in the example alongside **c: 4**) and the relative diagnostic (in the example **d: 3**). The red lockout lamp is on.

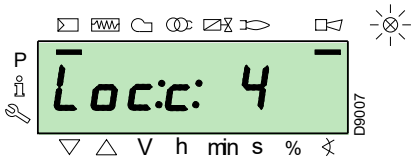

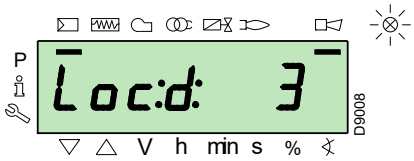

The display visualises alternately an error code and a diagnostic, which does not take the system into safety mode.

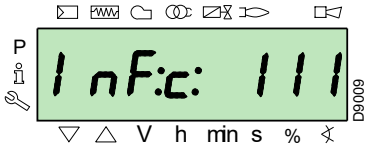

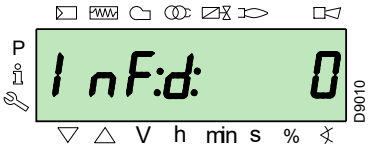

6.8.1.5 Reset procedure

The burner is in lockout when the red indicator light on the operator panel is lit up, and the display visualises the lockout code (in the example alongside **c: 4**) and the relative diagnostics (in the example **d: 3**) alternately.

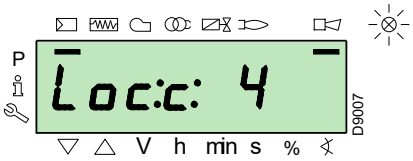

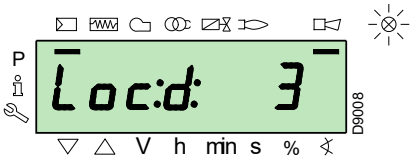

To reset, press the **"i/reset"** key for 1 s: the display will show **"rESEt"**. When the key is released, the lockout signal will disappear and the red indicator light will switch off.
The control box is reset.

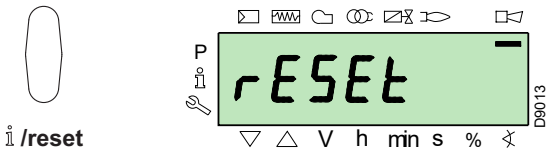

6.8.1.6 Manual lockout procedure

If necessary, it is possible to manually block the control box and, consequently, the burner, by pressing the key **"i/reset"** simultaneously with any other key of the operator panel.

With the selector **"0-1"** (Fig. 25 on page 26), the burner does not stop immediately, but the switch-off phase is activated.

6.8.1.7 Manual operation procedure

After the adjustment of the burner and the setting of the points on the modulation curve, it is possible to manually check the operation of the burner along the entire curve.

Example:
the burner is working at the requested load percentage: 20%.

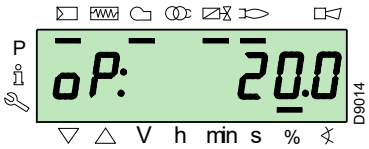

Press the **"F"** key for 1 second: **"LoAd"** is displayed and the load percentage flashes.

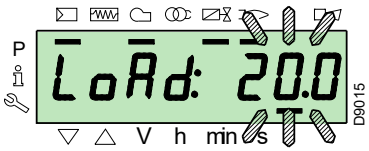

Releasing the **"F"** key, the standard visualisation appears, with the current load percentage flashing: this means that the burner is working in Manual mode (any outside adjustment is excluded and only the safety devices are active).

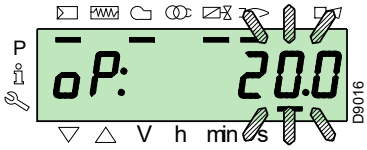

Keep the **"F"** key pressed and, with the keys **"+"** or **"–"**, increase or decrease the load percentage.

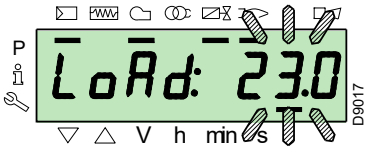

To exit manual mode, press the keys **"+"** and **"-"** (**ESC**) simultaneously for 3 seconds: the burner will work in Automatic mode and the output will depend on the thermostat/adjustment pressure switch (TR).

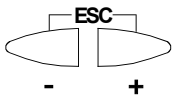

6.8.2 Info mode

The **Info mode** (**InFo**) visualises general system information. To access this level you must:

➤ press the **"i/reset"** key for 1-3 s.
➤ Release the key immediately when the display shows **"InFo"**.

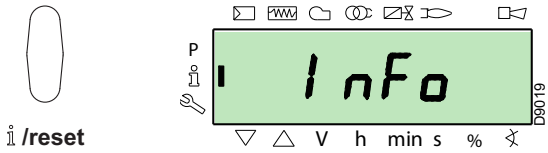

The list of parameters (in the sequence in which they are displayed) is shown in Tab. M.

No.	Parameter
167	Volumetric delivery of fuel in the unit of measurement selected
162	Operation time with flame
163	Operation time
164	No. of resettable ignitions
166	Total no. of ignitions
113	Identification code of the burner
107	Software version
108	Software variation
102	Control box test date
103	Identification code of the control box
104	Identification number of the group of parameters set
105	Version of the group of parameters
143	Reserved
End	

Tab. M

6.8.3 Service mode

The **Service mode** (**SEr**) visualises the error log and certain technical information about the system. To access this level you must:

➤ press the **"i/reset"** key for more than 3 s.

➤ Release the key immediately when the display shows **"SEr"**.

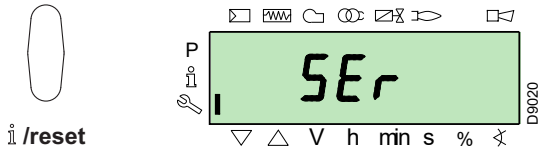

The list of parameters (in the sequence in which they are displayed) is shown in Tab. N.

No.	Parameter
954	Flame intensity (%)
960	Actual fuel which passes in units of volume / h (m³/h, l/h, ft³/h, gal/h)
121	Manual setting of output Not defined = automatic operation
922	Position of the servomotors (expressed in degrees, symbol)) 0 = fuel 1 = air
161	Number of errors
701÷725	Log of the errors: 701-725.01, Code

Tab. N

6.8.3.1 Operating mode on Info Mode and Service Mode

After access to these levels, the display visualises the number of the parameter (flashing) on the left, and the corresponding value on the right.

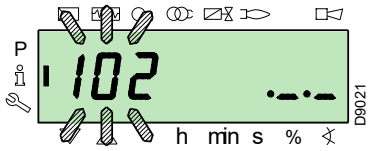

If the value is not displayed, press the **"i/reset"** key for a period of 1 to 3 seconds

To return to the Parameter List, press the **"i/reset"** key for more than 3 s, or press the keys **"+"** and **"-"** (**ESC**) simultaneously.

To move on to the next parameter, press the key **"+"** or **"i/reset"** for less than 1s. At the end of the list, the display visualises **"End"**.

To move back to the previous parameter, press the key **"-"**.

To return to the Normal/Standard Visualisation Mode, press the **"i/reset"** key for more than 3 s, or press the keys **"+"** and **"-"** (**ESC**) simultaneously.

For a moment the display will show **"OPErAte"**.

6.8.4 Parameters Mode

The **Parameters Mode** (**PArA**) displays and allows you to modify/programme the parameters list on page 39.

The factory-set parameters are not visible.

To access this level it is necessary to follow the **"Access procedure with password"**.

6.8.4.1 Access procedure with password

Press the **"F"** and **"A"** keys simultaneously for 1s.

For a moment the display will show **"CodE"**, and immediately after you will see 7 dashes, the first one flashing.

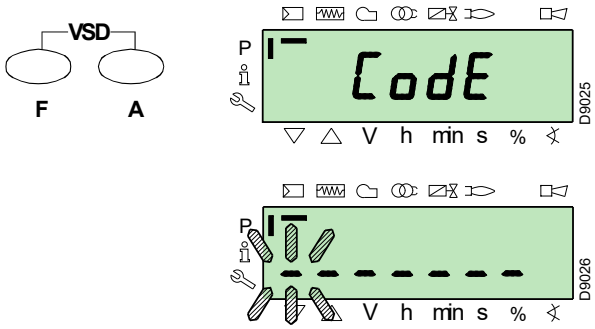

With the keys **"+"** and **"–"** select the first character of the password (letter or number), and confirm by pressing the key **"i/reset"**.

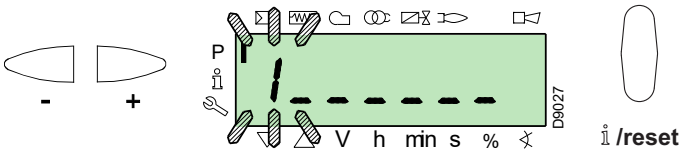

Once you have confirmed, the sign **"–"** will appear.

Continue in the same way for the other characters.

After inserting the last character of the password, confirm by pressing the key **"i/reset"**: if the password inserted is correct you will see **"PArA"** for a few seconds, then you can access the various groups of parameters.

With the keys **"+"** and **"–"** select the group you require.

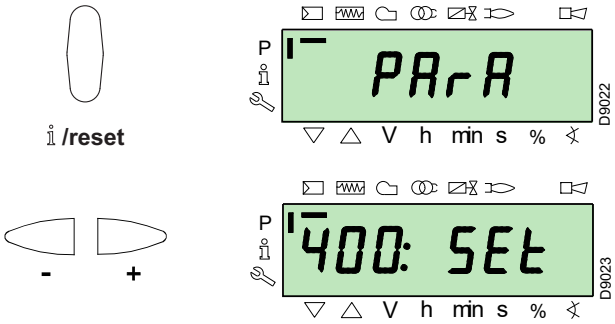

If the password inserted is incorrect, the message **"Error"** will appear for a moment. It is then necessary to repeat the procedure.

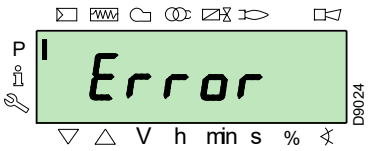

ATTENTION

The password must only be communicated to the qualified personnel or the Technical Assistance Service, and must be kept in a safe place.

Once the access procedure has been carried out, the display will show **"PArA"** for a few seconds.

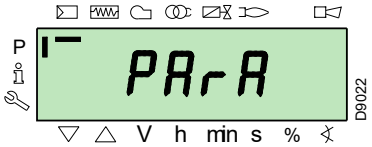

Select the group of parameters with keys **"+"** and **"-"**, and confirm by pressing the key **"i/reset"**.

Within the group you have chosen, scroll through the list with the keys **"+"** and **"-"**. At the end of the list, the display visualises **"End"**.

To return to Normal visualisation mode, simultaneously press the keys **"+"** and **"-"** (**ESC**) twice.

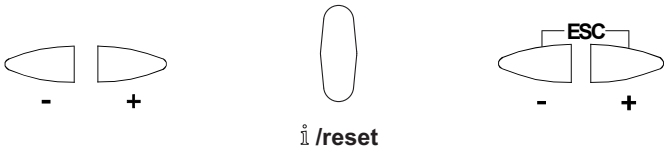

6.8.4.2 Assigning parameter levels

The parameters level is subdivided into groups as shown in Tab. O.

No.	Parameter
100: ParA	**General parameters** Information and identification data of the system.
200: ParA	**Checks on the burner** Type of operation, intervention and safety times of the various phases.
400: Set	**Air/fuel modulation curve** Setting of air/fuel adjustment points
500: ParA	**Positioning of servomotors** Choice of positions of the air/fuel servomotors in the various phases.
600: ParA	**Servomotors** Setting and addressing of the servomotors.
700: HISt	**Log of the errors:** Choice of different visualisation modes for the errors log.
900: dAtA	**Process information** Visualisation of information for the remote management of the burner.

Tab. O

ATTENTION

All the parameters are checked in the factory. Modification/tampering may compromise the good operation of the burner and cause injury to people or damage to things. In any case, modifications must be carried out by qualified personnel.

To modify a parameter, refer to the **"Parameter modification procedure"**.

6.9 Parameter modification procedure

After accessing the level and group of parameters, the display visualises the number of the parameter (flashing) on the left, and the corresponding value on the right.

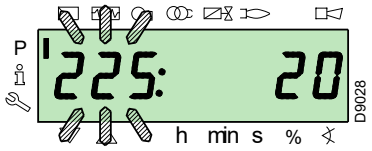

If the value is not visualised, press the key **"i/reset"** for 1 - 3 seconds.
An example of how to modify the parameter relating to **pre-purging time** (no.225) is given below.
Press the key **"i/reset"**: the value **20** (seconds) will appear.

NOTE:
The unit of measurement of the time is not visualised but is understood in seconds.

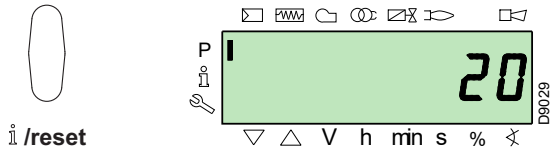

Press the key **"+"** and increase the value to **25** seconds (flashing). Press the key **"i/reset"** to confirm and store.

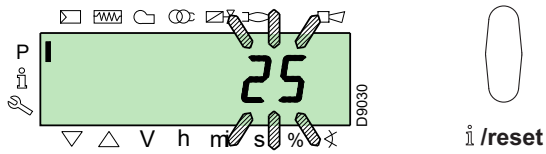

To return to the list of parameters, press the keys **"+"** and **"-"** (**ESC**) simultaneously.

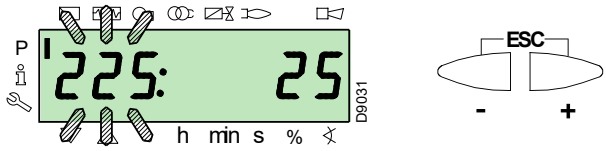

6.9.0.1 Procedure for inserting and adjusting points on the modulation curve

Nine adjustment/calibration points (P1 - P9) can be inserted in the control box for each servomotor, varying their position by degrees and, consequently, the quantity of air and fuel introduced.

The **ignition point P0** is independent of the minimum modulation value. This means that, in the event of difficulty, it is possible to switch on the burner at a value other than the modulation minimum (**P1**).

To access the **Parameter mode** (group 400) referring to the "**Access procedure with password**" on page 32.

To insert or adjust a point, proceed as follows.

Using the keys **"+"** and **"-"** insert/select the curve point you want and wait for it to flash: this means that the servomotors are now positioned on the values shown on the display and which correspond to the point previously set.

It is now possible to insert/modify the position by degrees.

The set value does not require confirmation.

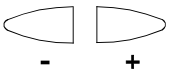

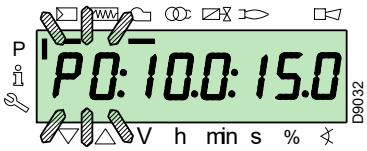

For the fuel servomotor, keep the key **"F"** pressed (the position in degrees flashes) and press the keys **"+"** or **"-"** to increase or decrease the value.

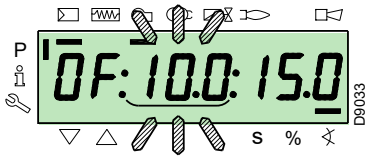

For the air servomotor, keep the key **"A"** pressed (the position in degrees flashes) and press the keys **"+"** or **"-"** to increase or decrease the value.

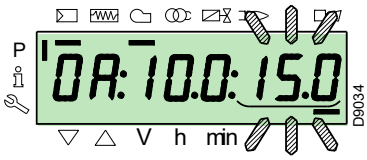

To adjust the speed of the inverter (expressed in **%** and that is **50 Hz = 100 %**), keep the buttons **"F"** and **"A"** simultaneously pressed, the percentage position blinks and press buttons **"+"** or **"-"** to increase or decrease the value.

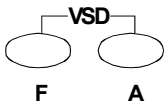

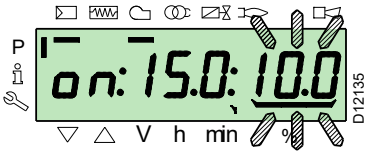

Select another point, or exit this area by pressing the keys **"+"** and **"-"** (**ESC**) simultaneously.

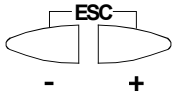

6.9.0.2 CALC function

The diagram (Fig. 32) shows how the fuel modulation curve is modified if the values of point **"P5"** are changed.
By keeping the **"+"** key pressed for more than 3 s, the points from **"P6"** to **"P8"** are recalculated.
By keeping the **"-"** key pressed for more than 3 s, the points from **"P4"** to **"P2"** are recalculated.

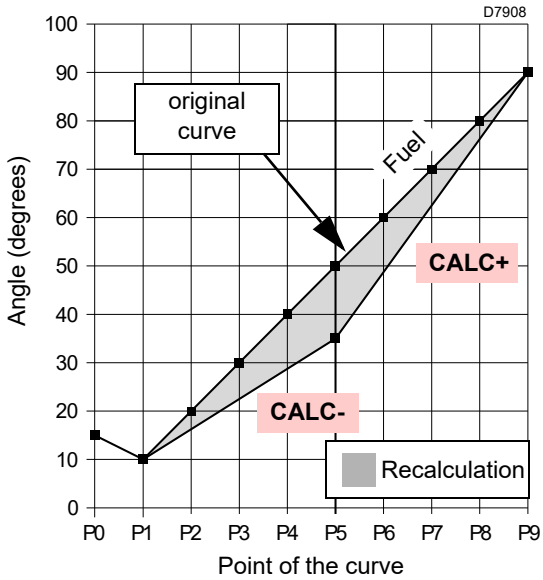

Fig. 32

The diagram of (Fig. 33) shows the fuel modulation curve when, after the modification of point **"P5"**, the recalculation of all the other points is not carried out.

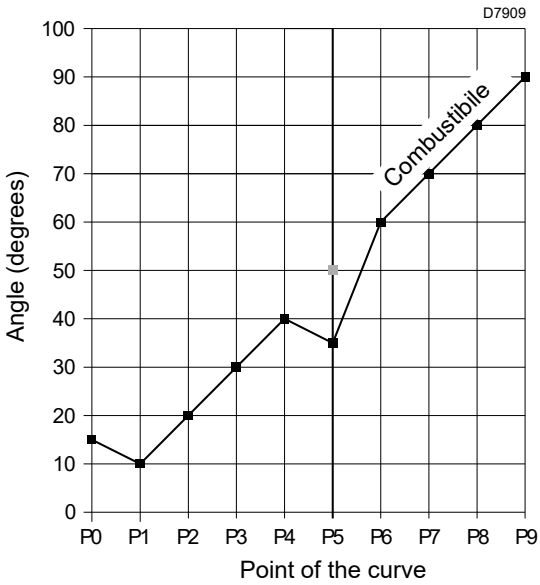

Fig. 33

6.10 Start-up procedure

Check that the operator panel display shows the heat request and **"OFF Upr"**: this means it is necessary to set the modulation curve of the burner.

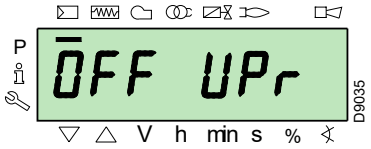

Access the Parameters Level referring to "**Access procedure with password**" on page 32.
The display screen displays the parameters group **400**.

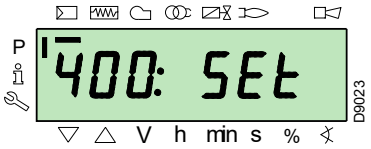

Confirm with the key **"i/reset"**

i /reset

The display shows **"run"**

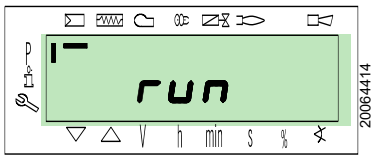

Confirm with the key **"i/reset".** The burner starts up.

The display shows all the phases and relative times in sequence. The phases are listed in the section "**List of phases**" on page 15.

Phase 22:

Start of the fan motor.

Phase 24:

The burner goes to the pre-purging position, the air servomotor opens the damper at 90°.

Phases 80, 81, 82, 83:

These phases relate to the valve seal test.

Phase 30:
The count of the pre-purging time pre-set in the factory begins.

Phase 36:

The burner goes to its switch-on position, point **"P0"**, defined in Tab. P on page 36: the display shows a flashing **"P0"** indication.

If the value proposed is adequate, **confirm using the "+" button**.

Otherwise, modify the ignition point (see the section "**Procedure for inserting and adjusting points on the modulation curve**" on page 34.

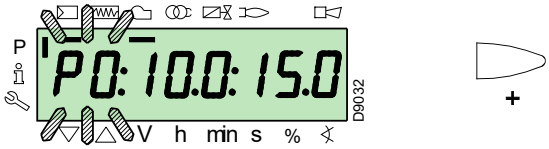

ATTENTION

The values shown in the figure are purely for indication purposes.

Phase 38:

The ignition phase begins and the spark goes off.

Phase 40:

The gas valves open (the count of the safety time begins). Using the appropriate visor check there is a flame and that the combustion parameters are correct. if necessary, vary the degrees of opening/closing of the air and fuel servomotors.

If the control box goes into lockout, press the keys **"+"** and **"-"** (**ESC**) simultaneously: the display visualises alternately the lockout code for flame absence **c: 4**) and the relative diagnostic (**d: 3**).

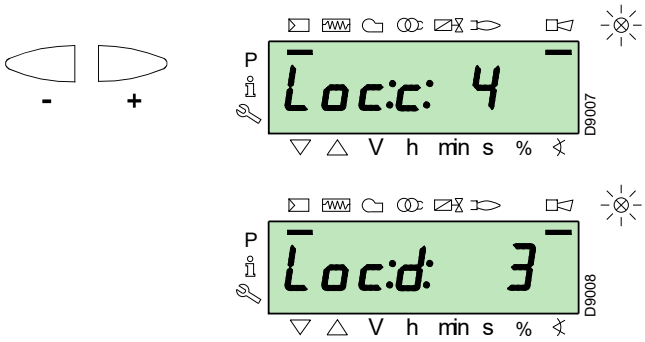

Solve the problem, referring to the paragraph "**Ignition failure**" on page 43.

To unlock, see "**Reset procedure**" on page 31. The display visualises **"OFF Upr"**.

Repeat the **"Start-up procedure"**.

ATTENTION

The values previously inserted remain stored.

Once the ignition has occurred (point **"P0"**), proceed with the calibration of the modulation curve.

Press the button **"+"**: the display visualises the indicator **"P1"** flashing and proposes the same settings as point **"P0"**.

Press button **"+"** again: the display shows **"CALC"** for a few seconds.

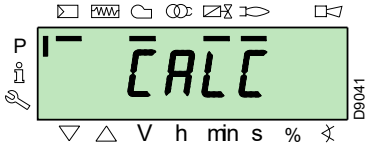

The control box will automatically report the same values set in points **"P0"** and **"P1"** at points **"P2"** to **"P8"**.

ATTENTION

The purpose of this is to reach point **"P9"** to regulate/determine the maximum operation output.

Press **"+"** until point **"P9"** is reached.

Once point **"P9"** is reached wait for the display to show the flashing indicator **"P9"** proposing the same settings as point **"P0"**.

Now it is possible to change this value to obtain the maximum operating power desired.

If the gas pressure is insufficient, despite opening the gas servomotor to a maximum of 90°, it is necessary to use the gas valve stabiliser.

After adjusting point **"P9"** keep the **"-"** key on the display pressed for about 5 seconds, **"CALC"** appears for a few seconds.

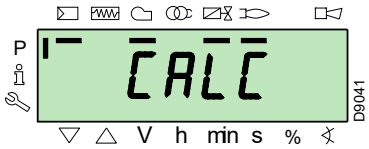

The control box will automatically calculate the points from **"P8"** to **"P2"**, distributing them in a straight line. These are theoretical and must be checked.

Check that the settings of point **"P8"** are adequate.

If not, modify the point.

Proceed in sequence, with the **"-"** button, up to point **"P1"**.

It is possible to modify point **"P1"** to obtain a minimum modulation point different to the ignition point (**"P0"**).

ATTENTION

Before moving on from one point to the next, wait for the servomotors to reach the position visualised on the display.

During the adjustment of each point, work on the air and gas servomotors, without modifying the position of the gas valve stabiliser.

Halfway through the procedure (i.e. around point **P4** or **P5**), you are advised to measure gas delivery and check that the output is about 50% of the maximum output.

If this is not the case, work also on the gas valve stabiliser: in this case however, it is necessary to revise the calibrations of all the points previously set.

Once the calibration of point **"P1"** is completed, confirm by pressing the keys **"+"** and **"-"** (**ESC**) simultaneously: parameter **"546"** will appear.

If you want to make the burner work on the entire modulation curve, press the **"+"** and **"-"** (**ESC**) keys simultaneously: in this way, parameter **"546"** will automatically be assigned the value of 100% and parameter **"545"** will have a value of 20%.

If you want to make the burner work on just a part of the modulation curve, modify the parameters **"546"** and **"545"** according to the "**Parameter modification procedure**" on page 33.

Press the keys **"+"** and **"-"** (**ESC**) simultaneously twice, the display will show the current load position.

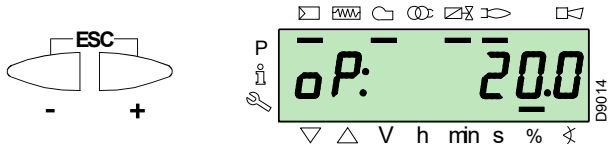

ATTENTION

At the end of the **"Start-up procedure"** it is necessary to carry out a **"Backup"**, which is used to memorise the parameters and the data in the control box within the display RDI21…

This operation allows the parameters and the points of the modulation curve to be restored in the event of problems.

It is advisable to perform a backup every time that a parameter is changed!

For the procedure see "**Backup**" on page 37.

Factory settings

P0	Burner
air	2°
gas	25.5°

Tab. P

6.11 Backup / Restore procedure

At the end of the **"Start-up procedure"** it is wise to carry out a backup, creating a copy of the data memorised on the REC, in the RDI 21 display panel.

This will allow the data to be used for programming a new REC or to return to the memorised settings of the same REC.

ATTENTION

We suggest that this operation be carried out at the end of any intervention that involves modifications to what has been set on the cam.

This will allow you to carry out a restore in a simple manner on a new cam supplied as a replacement part, without having to reprogramme the system.

6.11.1 Backup

To perform the backup, proceed as follows:

➤ access the Parameters Level referring to "**Access procedure with password**" on page 32 .

The display screen displays the parameters group **400**.

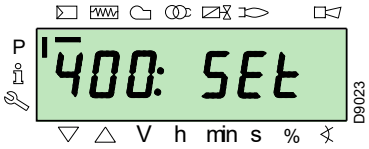

With the key **"-"**:

-

Select the parameters group **000**:

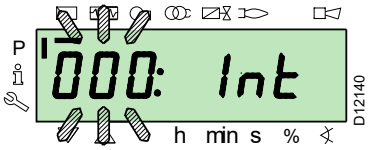

The **000** parameter blinks, confirm using the **"i/reset"** key:

i /reset

The display screen shows parameter **050** blinking:

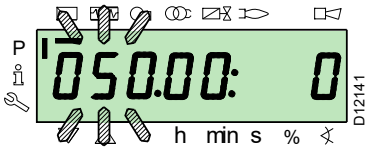

Confirm with the key **"i/reset"**:

i /reset

The parameter **bAC_UP** appears on the display screen:

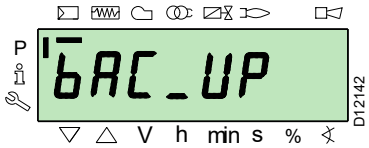

confirm with the key **"i/reset"**:

i /reset

The display screen shows the following value:

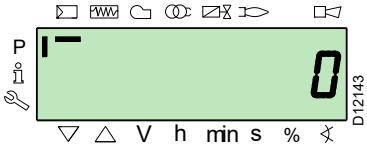

Use the button **"+"**:

+

The value will be set to **1**. Value 1 is flashing:

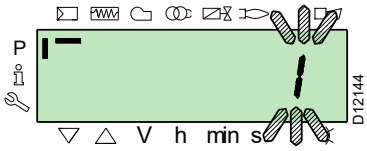

confirm with the button **"i/reset"** to activate the **backup** process.

i /reset

The value **1** appears on the display screen:

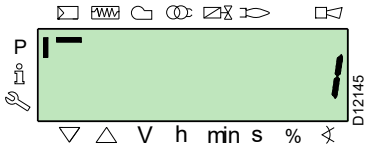

After approx 5 seconds (it depends on the duration of the programme), the 0 value appears on the display screen, this is to indicate that the backup process has been completed correctly.

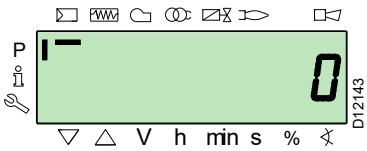

NOTE:
If an error occurs during the backup process, the display screen shows a negative value.
Refer to diagnostic code 137 to determine the cause of the error (see section "List of parameters" on page 39).

6.11.2 Restore

ATTENTION

Use this procedure when replacing equipment with a parts code. In this way it is possible to have the default parameters already memorised or those memorised during the start-up.

This procedure cannot be carried out on equipment coming from other burners.

To perform the restore procedure, proceed as follows:

➤ access the Parameters Level referring to "**Access procedure with password**" on page 32 .

The display screen displays the parameters group **400**.

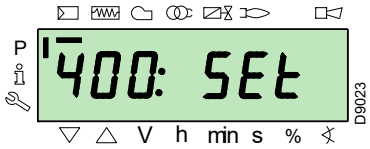

With the key **"-"**:

Select the parameters group **000**:

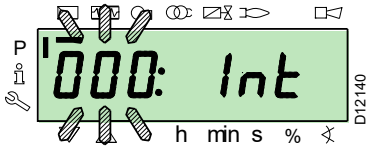

The **000** parameter blinks, confirm using the **"i/reset"** key:

The display screen shows parameter **050** blinking:

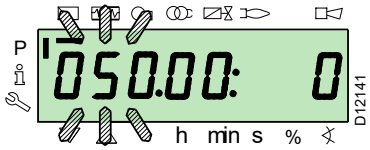

Confirm with the key **"i/reset"**:

ATTENTION

It is advisable to perform a backup every time that a parameter is changed, after checking that the modification carried out is correct.

The parameter **bAC_UP** appears on the display screen:

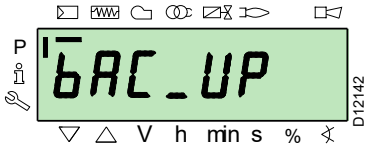

With the key **"+"**

select the **rEStorE** parameter

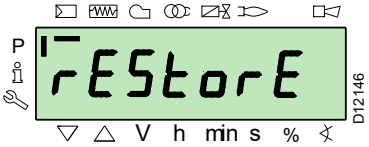

Confirm with the key **"i/reset"**:

The display shows the following value.

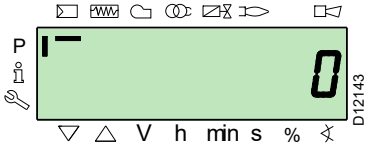

Use the button **"+"**:

The value will be set to **1**. Value 1 is flashing:

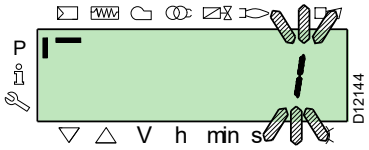

confirm with the button **"i/reset"** to activate the **restore** process.

The value **1** appears on the display screen:

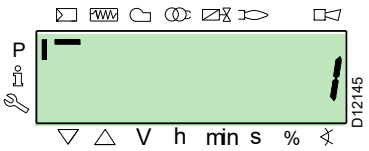

After approx 8 seconds (it depends on the duration of the programme), the **0** value appears on the display screen, this is to indicate that the restore process has been completed correctly.

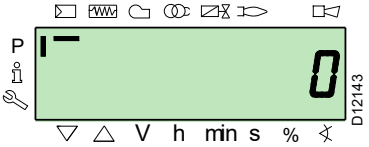

NOTE:
When the restore process is successfully completed, the 0 value is shown on the display screen.
Err C information: 136 D: 1 (restore process initialised) is displayed for a brief moment.

At the end of the restore process, it is necessary to check the sequence of functions and the list of parameters.

6.11.3 List of parameters

Parameter		No. of elements	Unit of measurement	Modification	Values interval		Degree of precision	Predefined setting	Access mode
No.	Description				Min.	Max.			
000	**INTERNAL PARAMETERS**								
050	Start backup/restore process via RDI21... / PC TOOL (set the parameter to 1) Index 0 = create backup Index 1 = perform restore Negative values indicate errors	2	-	Modification	-99	2	1	0; 0	Service mode
055	Burner identification number created from the backup on RDI21...	1	-	Reading only	0	99999999	1	0	Service mode
056	ASN number created by the backup on RDI21...	8	-	Reading only	0	127	1	0	Service mode
057	Software Version created by the backup on RDI21...	1	-	Reading only	0x100	0xFFF9	1	0	Service mode
100	**GENERAL PARAMETERS**								
102	Control box identification date	1	-	Reading only	0	255	1		Info mode
103	Control box identification number	1	-	Reading only	0	65535	1		Info mode
104	Identification number of the group of parameters set	1	-	Reading only	0	255	1	30	Info mode
105	Version of the group of parameters set	1	-	Reading only	0	0xFFFF	1	V01.08	Info mode
107	Software version	1	-	Reading only	0	0xFFF9	1	V03.30	Info mode
108	Software variation	1	-	Reading only	0	225	1	1	Info mode
111	ASN number to verify the ASN number created by the backup on RDI 21…	8	-	Reading only	0	127	1	0	Service mode
113	Burner identification	1	-	Modification	0	99999999	1	Not defined	Info Mode with password Service Mode
121	Manual setting of output Not defined = automatic operation	1	%	Modification / zero setting	0%	100%	0.1%	Not defined	Info mode
123	Minimum output step position Index 0: BACS output Index 1: output of the external load regulator, analogue. Index 2: output of the external load regulator contacts.	3	%	Modification	0%	100%	0.1%	0% ; 1%; 0%	Service mode
124	Beginning flame loss test (TÜV test)(define the parameter at 1)(switch of flame loss fuel valves) A negative value indicates an error (see code 150)	1	-	Modification	-6	1	1	0	Service mode
125	Frequency of main power supply 0 = 50 Hz 1 = 60 Hz	1	-	Modification	0	1	1	0	Service Mode
126	Brightness of display	1	%	Modification	0%	100%	1%	75%	Service Mode
128	Fuel meter: Led pulse valence (led pulses / volumetric flow units)	1	-	Modification	0	400	0,01	0	Service Mode
130	Eliminate visualisation error chronology To eliminate the visualisation, set the parameter to 1, then to 2 Answer 0: process successful Answer -1: timeout of 1_2 - sequence	1	-	Modification	-5	2	1	0	Service Mode

Parameter		No. of elements	Unit of measure-ment	Modifica-tion	Values interval		Degree of precision	Predefined setting	Access mode
No.	Description				Min.	Max.			
133	Default output for TÜV test: Not valid for TÜV test when output is activated 2,000 ..... 10,000 = low flame or first / second / third stage	1	%	Modification / zero setting	20%	100%	0.1%	Not defined	Service Mode
141	Remote management of control box 0 = off 1 = Modbus 2 = reserved	1	-	Modification	0	2	1	0	Service Mode
142	Standby time before a new attempt in event of com-munication fault Set values: 0 = not active 1 = ... 7200 s	1	s	Modification	0s	7200s	1s	120s	Service Mode
143	Reserved	1	-	Modification	1	8	1	1	Info Mode
144	Reserved	1	s	Modification	10s	60s	1s	30s	Service Mode
145	Peripheral address for Modbus Set values: 1 ... 247	1	-	Modification	1	247	1	1	Service Mode
146	Baud Rate for Modbus Set values: 0 = 9600 1 = 19200	1	-	Modification	0	1	1	1	Service Mode
147	Parity for Modbus 0 = none 1 = odd 2 = even	1	-	Modification	0	2	1	0	Service Mode
148	Selection of the burner operation during the interrup-tion of the switch-over with the system of remote man-agement. Set values: With **modulating operation** the settings of the values are the following: 0...19.9 = burner switched off 20...100 = 20...100% modulation field of the burner. With **stage operation**: 0 = burner off P1, P2, P3 No setting = no function in the event of communication interruption	1	%	Modification / zero setting	0%	100%	0.1%	Not defined	Service Mode
161	Total number of errors	1	-	Reading only	0	65535	1	0	Info mode
162	Hours of operation (that can be reset)	1	h	Reset	0 h	999999h	1 h	0h	Info mode
163	Total hours of power supply to control box	1	h	Reading only	0h	999999h	1h	0h	Info mode
164	Total number of start-ups (that can be reset)	1	-	Reset	0	999999	1	0	Info mode
166	Total number of start-ups	1	-	Reading only	0	999999	1	0	Info mode
167	Volumetric delivery of fuel in the selected unit of meas-urement (that can be reset)	1	m^3, l, ft^3, gal	Reset	0	99999999	1	0	Info mode
200	**BURNER CHECKS**								
201	Burner operation mode (fuel supply line, modulating/ stage, servomotors, etc.) -- = not defined (eliminate curves) 1 = Gmod 2 = Gp1 mod 3 = Gp2 mod 4 = Lo mod 5 = Lo 2 stage 6 = Lo 3 stage 7 = Gmod pneu 8 = Gp1 mod pneu 9 = Gp2 mod pneu 10 = LoGp mod 11 = LoGp 2-stage 12 = Lo mod 2 fuel valves 13 = LoGp mod 2 fuel valves 14 = G mod pneu without actuator 15 = Gp1 mod pneu without actuator 16 = Gp2 mod pneu without actuator 17 = Lo 2-stage without actuator 18 = Lo 3-stage without actuator 19 = G mod only gas actuator 20 = Gp1 mod only gas actuator 21 = Gp2 mod only gas actuator 22 = Lo mod only oil actuator	1	-	Modify/set to zero	1	22	1	Not defined	Service Mode

Parameter		No. of elements	Unit of measure-ment	Modifica-tion	Values interval		Degree of precision	Predefined setting	Access mode
No.	Description				Min.	Max.			
208	Stopping of the program 0 = deactivated 1 = pre-purging (Ph24) 2 = Ignition (Ph36) 3 = Interval 1 (Ph44) 4 = Interval 2 (Ph52)	1	-	Modification	0	4	1	0	Service Mode
210	Alarm as the pre-purging phase begins; 0 = Deactivated; 1 = Activated	1	-	Modification	0	1	1	0	Service Mode
211	Uphill train fan motor	1	s	Modification	2s	60s	0.2s	2s	Service Mode
212	Maximum time to reach low flame	1	s	Modification	0.2s	10 min	0.2s	45s	Service Mode
215	Maximum repeats of safety circuit 1 = No repetition 2...15 = Number of repetitions 16 = Constant repetitions	1	-	Modification	1	16	1	16	Service Mode
221	Gas: selection of flame sensor 0 = QRB.../ QRC 1 = ION / QRA	1	-	Modification	0	1	1	1	Service Mode
222	Gas: Selection of the pre-purging function 0 = deactivated 1 = activated	1	-	Modification	0	1	1	1	Service Mode
223	Maximum repeats of minimum gas pressure switch intervention 1 = No repetition 2...15 = Number of repetitions 16 = Constant repetitions	1	-	Modification	1	16	1	16	Service Mode
225	Gas: pre-purging time	1	s	Modification	20s	60 min	0.2s	20s	Service Mode
226	Gas: pre-ignition time	1	s	Modification	0.4 s	60 min	0.2s	2s	Service Mode
230	Gas: interval 1	1	s	Modification	0.4 s	60s	0.2s	2s	Service Mode
232	Gas: interval 2	1	s	Modification	0.4 s	60s	0.2s	2s	Service Mode
233	Gas: post-combustion time	1	s	Modification	0.2s	60s	0.2s	8s	Service Mode
234	Gas: Post-purging time (no extraneous light test)	1	s	Modification	0.2s	108 min	0.2s	0.2s	Service Mode
236	Gas: Minimum gas pressure switch input 0 = deactivated 1 = minimum gas pressure switch (upstream of the fuel valve 1 (V1)) 2 = valve control via the minimum pressure switch (between fuel vale 1 (V1) and 2 (V2))	1	-	Modification	1	2	1	1	Service Mode
237	Gas: Maximum gas pressure switch / POC Input 0 = deactivated 1 = Maximum gas pressure switch 2 = POC	1	-	Modification	1	2	1	1	Service Mode
241	Gas: Valve leak detection test 0 = test deactivated 1 = valve leak detection test at start up 2 = valve leak detection test at shutdown 3 = valve leak detection test at start-up and at shut-down	1	-	Modification	0	3	1	2	Service Mode
248	Gas: Post-purging time (t3)(at deactivation of the load (LR)) - ON	1	s	Modification	1s	108 min	0.2s	1s	Service Mode
261	Oil: selection of flame sensor 0 = QRB.../ QRC... 1 = ION / QRA...	1	-	Modification	0	1	1	0	Service Mode
265	Oil: pre-purging time	1	s	Modification	15s	60 min	0.2s	15s	Service Mode
266	Oil: pre-ignition time	1	s	Modification	0.6s	60 min	0.2s	2s	Service Mode
270	Oil: interval 1	1	s	Modification	0.4 s	60 min	0.2s	2s	Service Mode
272	Oil: interval 2	1	s	Modification	0.4 s	60 min	0.2s	2s	Service Mode
273	Oil: post-combustion time	1	s	Modification	0.2s	60s	0.2s	8s	Service Mode
274	Oil: Post-purging time (no extraneous light test)	1	s	Modification	0.2s	108 min	0.2s	0.2s	Service Mode
276	Oil: Minimum input oil pressure switch 0 = deactivated 1 = activated from phase 38 2 = activated from safety time (TSA)	1	-	Modification	1	2	1	1	Service Mode
277	Oil: Maximum oil pressure switch / POC Input 0 = deactivated 1 = Maximum oil pressure switch 2 = POC	1	-	Modification	1	2	1	1	Service Mode

Parameter No.	Parameter Description	No. of elements	Unit of measure-ment	Modifica-tion	Values interval Min.	Values interval Max.	Degree of precision	Predefined setting	Access mode
281	Oil: selection transformer ignition phase TA 0 = brief pre-ignition (Ph38) 1 = long pre-ignition (with fan)(Ph22)	1	-	Modification	0	1	1	1	Service Mode
284	Oil: Post-purging time (t3)(at deactivation of the load (LR)) - ON	1	s	Modification	1s	108 min	0.2s	1s	Service Mode
400	**AIR / FUEL MODULATION CURVES**								
401	Checking fuel servomotor (only setting of the curve)	13	(°)	Modification	0°	90°	0.1°	0°; 0°; 15°; Not defined	Service Mode
402	Checking air servomotor (only setting of the curve)	13	(°)	Modification	0°	90°	0.1°	0°; 90°; 45°; Not defined	Service Mode
500	**POSITIONING OF SERVOMOTORS**								
501	Position of the fuel servomotor in absence of flame Index 0 = standby position Index 1 = pre-purging position Index 2 = post-purging position	3	(°)	Modification	0°	90°	0.1°	0°; 0°; 15°	Service Mode
502	Position of the air servomotor in absence of flame Index 0 = standby position Index 1 = pre-purging position Index 2 = post-purging position	3	(°)	Modification	0°	90°	0.1°	0°; 90°; 45°	Service Mode
545	Minimum modulation limit Not defined = 20%	1	%	Modification / zero setting	20%	100%	0.1%	Not defined	Service Mode
546	Maximum modulation limit Not defined = 100%	1	%	Modification / zero setting	20%	100%	0.1%	Not defined	Service Mode
600	**SERVOMOTORS**								
606	Tolerance limit for position check (0.1°) Index 0 = fuel Index 1 = air More serious position error, where a defect has certainly been detected - > Stop range: (P 606 - 0.6°) a P606	2	(°)	Modification	0.5°	4°	0.1°	1.7°; 1.7°	Service Mode
645	Analogue exit configuration 0 = DC 0...10 V 1 = DC 2...10 V 2 = DC 0 / 2...10 V	1	-	Modification	0	2	1	2	Service Mode
700	**LOG OF THE ERRORS**								
701	Error chronology: 701-725.01.Code	25	-	Reading only	0	255	1	0	Info mode
•	Error chronology: 701-725.02.Diagnostic code	25	-	Reading only	0	255	1	0	Info mode
•	Error chronology: 701-725.03.Error class	25	-	Reading only	0	6	1	0	Info mode
•	Error chronology: 701-725.04.Phase	25	-	Reading only	0	255	1	0	Info mode
•	Error chronology: 701-725.05.Start-up meter	25	-	Reading only	0	99999999	1	0	Info mode
725	Error chronology: 701-725.06.Load	25	%	Reading only	0%	100%	0.1%	0%	Info mode
900	**PROCESS INFORMATION**								
903	Actual output Index 0 = fuel Index 1 = air	2	%	Reading only	0%	100%	0.1%	0%	Info mode
922	Position of the servomotors Index 0 = fuel Index 1 = air	2	(°)	Reading only	-50°	150°	0.01°	0°	Info mode
942	Heat source active 1 = output during the definition of the curves 2 = manual output 3 = BACS output 4 = analogue input output 5 = output of the external load regulator contacts	1	-	Reading only	0	255	1	0	Service mode
947	Result of the sampling of the contact (codified in bits) Bit 0.0 = 1: Minimum pressure switch Bit 0.1 = 2: Maximum pressure switch Bit 0.2 = 4: Pressure switch control valves Bit 0.3 = 8: Air pressure switch Bit 0.4 = 16: Open load check Bit 0.5 = 32: ON load check Bit 0.6 = 64: Closed load check Bit 0.7 = 128: Safety circuit Bit 1.0 = 1: Safety valve Bit 1.1 = 2: Ignition Bit 1.2 = 4: Fuel valve 1 Bit 1.3 = 8: Fuel valve 2 Bit 1.4 = 16: Fuel valve 3/ pilot valve Bit 1.5 = 32: Reset	2	-	Reading only	0	255	1	0	Info mode

Parameter		No. of elements	Unit of measure-ment	Modifica-tion	Values interval		Degree of precision	Predefined setting	Access mode
No.	Description				Min.	Max.			
950	Relay request status (coded in bits) Bit 0 = 1: Alarm Bit 1 = 2: Safety valve Bit 2 = 4: Ignition Bit 3 = 8: Fuel valve 1 Bit 4 = 16: Fuel valve 2 Bit 5 = 32: Fuel valve 3/ pilot valve	1	-	Reading only	0	255	1	0	Info mode
954	Flame intensity	1	%	Reading only	0%	100%	1%	0%	Info mode
960	Actual output	1	m^3/h, l, h, ft^3/h, gal/h	Reading only	0	6553,5	0,1	0	Info mode
961	Status of external modules and visualisation	1	-	Reading only	0	255	1	0	Info mode
981	Memory error: Code	1	-	Reading only	0	255	1	0	Info mode
982	Memory error: diagnostic code	1	-	Reading only	0	255	1	0	Info mode
992	Error indicators	10	-	Reset	0	0xFFFFFFFF	1	0	Service mode

Tab. Q

6.12 Operation

Burner without modulating operation kit

Once the start-up cycle is completed, the servomotor command moves on to the thermostat/pressure switch TR that controls the pressure or the temperature in the boiler.

- ➤ If the temperature or the pressure is low (so the thermostat/ pressure switch TR is closed), the burner progressively increases the output as far as the MAX value (point " **P9**").
- ➤ If the temperature or the pressure increases as far as the opening of the thermostat/pressure switch TR, the burner progressively reduces the output as far as the MIN value (point "**P1**"),. The sequence repeats endlessly.
- ➤ The burner stops when the heat request is less than the heat supplied by the burner at MIN output.
- ➤ The thermostat/pressure switch TL opens, the control box carries out the switching off phase.
- ➤ The air damper closes completely to reduce heat losses to a minimum.

Burner without modulating operation kit (with control box REC37 only)

As an alternative to control through TR, the command for burner modulation can be made also using a 4-20 mA signal.

Burner with modulating operation kit

See manual enclosed with the adjuster kit.

6.13 Motor lockout

If the motor does not start, it could be because of a thermal relay intervention due to its incorrect calibration or problems with the motor or the main power supply, to release press the button of the thermal relay, see paraghraph "**Calibration of the thermal relay**" on page 25.

6.14 Ignition failure

If the burner does not switch on, there is a lockout within 3s of the electrical supply reaching the gas valve.

It is possible that the gas does not reach the pilot within the safety time of 3s.

Then, increase the output of the gas pilot through the gas regulator 1)(Fig. 26 on page 27).

ATTENTION

In the event the burner stops, in order to prevent any damage to the installation, do not unblock the burner more than twice in a row.

If the burner locks out for a third time, contact the customer service.

DANGER

In the event there are further lockouts or faults with the burner, the maintenance interventions must only be carried out by qualified, authorised personnel, in accordance with the contents of this manual and in compliance with the standards and regulations of current laws.

6.15 Burner flame goes out during operation

If the flame should go out during operation, the burner will lockout within 1s.

6.16 Stopping of the burner

The burner can be stopped by:
- ➤ intervening on the disconnecting switch of the electrical supply line, located on the boiler panel;
- ➤ removing the transparent protection 28)(Fig. 5 on page 10), after unscrewing the relative screw.

There are now two possibilities:
- – using the operator panel according to the manual lockout procedure on page 31;
- – using the switch 0-1 of Fig. 25 on page 26.

6.17 Final checks (with burner operating)

➤ Open the thermostat/pressure switch TL ➤ Open the thermostat/pressure switch TS	⇨	The burner must stop
➤ Turn the gas maximum pressure switch knob to the minimum end of scale position ➤ Turn the air pressure switch knob to the maximum end of scale position	⇨	The burner must stop in lockout
➤ Turn off the burner and cut off the power ➤ Disconnect the minimum gas pressure switch connector	⇨	The burner must not start
➤ Cover the flame sensor	⇨	The burner must stop in lockout due to ignition failure

Tab. R

ATTENTION

Make sure that the mechanical locking systems on the various adjustment devices are fully tightened.

6.18 Monitoring system of the combustion head temperature

The burner is equipped with a temperature control device 50)(Fig. 5 on page 10) which, by means of a thermocouple, controls the temperature inside the combustion head to prevent damage to the combustion head.

The outputs of the control device act directly on the "safety loop" of the control box by locking-out the burner (LOC 22).

The control device locks out the control box in the following cases:
- – the allowed temperature limit has been reached (factory setting);
- – failure of the measurement circuit (thermocouple connection);
- – failure of the control device (or control device without ower supply).

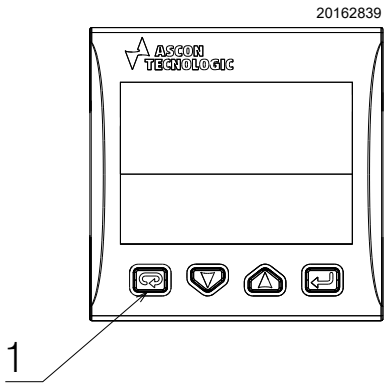

Fig. 34

In case of lock-out:
- ➤ check possible faults and anomalies on the temperature control and on the relevant external fuse;
- ➤ check the integrity of the thermocouple (for procedure **see "Opening the burner" on page 48**);
- ➤ check the integrity of the combustion head.

After the appropriate checks, proceed as follows to restore the correct burner operation:
- ➤ reset the alarm condition by pressing the button 1)(Fig. 34) on the temperature control;
- ➤ reset the lock-out condition on the control box.

7 Maintenance

7.1 Notes on safety for the maintenance

The periodic maintenance is essential for the good operation, safety, yield and duration of the burner.

It allows you to reduce consumption and polluting emissions and to keep the product in a reliable state over time.

DANGER

The maintenance interventions and the calibration of the burner must only be carried out by qualified, authorised personnel, in accordance with the contents of this manual and in compliance with the standards and regulations of current laws.

Before carrying out any maintenance, cleaning or checking operations:

DANGER

Turn off the burner's electrical supply using the main system switch.

DANGER

Turn off the fuel interception tap.

Wait for the components in contact with heat sources to cool down completely.

7.2 Maintenance programme

7.2.1 Maintenance frequency

The gas combustion system should be checked at least once a year by a representative of the manufacturer or another specialised technician.

7.2.2 Safety test - with gas feeding closed

For its safe commissioning it is very important to make sure that the electrical wiring has been carried out correctly between the gas valves and the burner.

To this end, after checking that the connections have been made in conformity with the burner's wiring diagrams, a starting cycle should be carried out with the gas tap closed (dry test).

1 The manual gas valve should be closed with the locking/releasing device ("lock-out / tag out" procedure).
2 Make sure the limit electric contacts of the burner close.
3 Make sure the contact of the minimum gas pressure switch closes (where foreseen).
4 Proceed with a tentative start up of the burner.

The starting cycle should occur with the following phases:

– Starting the fan motor for pre-purging.
– Carrying out the gas valve leak detection control, if applicable.
– Completing the pre-purging.
– Reaching the ignition point.
– Power supply of the ignition transformer.
– Power supply the gas valves.

Since the gas is closed, the burner will not be able to start and its control box will stop or go into a safety lockout after the ignition attempts set in the control box programming (usually 3 attempts).

The effective supplying of the gas valves can be checked with the insertion of a tester; some valves are fitted with light signals (or closure/opening position indicators) that are activated when the electrical supply arrives.

ATTENTION

IF THE ELECTRICAL SUPPLY OF THE GAS VALVES OCCURS AT AN UNEXPECTED MOMENT, DO NOT OPEN THE MANUAL VALVE, DISCONNECT THE ELECTRICAL SUPPLY, CHECK THE WIRING; CORRECT THE ERRORS AND CARRY OUT THE ENTIRE TEST AGAIN.

7.2.3 Checking and cleaning

The operator must use the required equipment during maintenance.

Combustion

Carry out an analysis of the combustion discharge gases. Significant differences with respect to the previous check indicate the points where more care should be exercised during maintenance.

Combustion head

Open the burner and make sure that all components of the combustion head are in good condition, not deformed by the high temperatures, free from impurities from the environment, free from corrosion related materials and properly positioned.

Burner

Check that there are not excess wear or loosen screws. Clean the outside of the burner.

Fan

Check to make sure that no dust has accumulated inside the fan or on its impellers, as this condition will cause a reduction in the air flow rate and provoke polluting combustion.

Boiler

Clean the boiler as indicated in its accompanying instructions in order to maintain all the original combustion characteristics intact, especially: the flue gas temperature and combustion chamber pressure.

Gas leaks

Make sure that there are no gas leaks on the pipe between the gas meter and the burner.

Gas filter

Change the gas filter when it is dirty.

Filter dirtying control (if present)

Check the cleanliness of the air filter, in particular if the “Warning” pilot light is off. If the filter is clean is necessary to check the condition of fuses, relays, circuits, pressure switch e filter.

Combustion

If the combustion values measured before starting maintenance do not comply with applicable legislation or do not indicate efficient combustion, contact the Technical Support Service to implement the necessary adjustments.

It is advisable to set the burner according to the type of gas used. Optimum calibration values:

	MIN output		MAX output	
	CO_2 (%)	O_2 (%)	CO_2 (%)	O_2 (%)
Methane	8	6.6	8.5	5.7

Tab. S

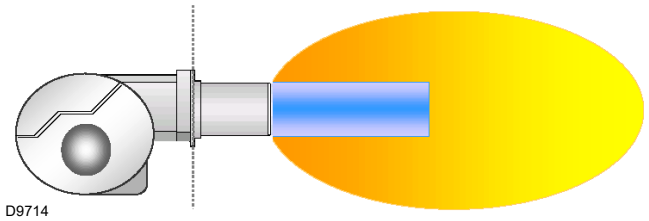

Fig. 35

7.2.4 Safety components

The safety components must be replaced at the end of their life cycle indicated in Tab. T. The specified life cycles do not refer to the warranty terms indicated in the delivery or payment conditions.

Safety component	Life cycle
Flame control	10 years or 250,000 operation cycles
Flame sensor	appross. 10.000 h and max 50°C
Gas valves (solenoid)	10 years or 250,000 operation cycles
Pressure switches	10 years or 250,000 operation cycles
Pressure adjuster	15 years
Servomotor (electronic cam) (if present)	10 years or 250,000 operation cycles
Oil valve (solenoid) (if present)	10 years or 250,000 operation cycles
Oil regulator (if present)	10 years or 250,000 operation cycles
Oil pipes/ couplings (metallic)(if present)	10 years
Flexible hoses (if present)	5 years or 30,000 pressurised cycles
Fan impeller	10 years or 500,000 start-ups

Tab. T

7.2.5 Electrical current to flame sensor

Min value for a good work: 70 µA.
If the value is lower, it could be due to:

– exhausted sensor
– low voltage (lower than 187 V)
– bad regulation of the burner
– viewing port dirty

In order to measure the current, use a microammeter of 100 µA d.c., connected in series to the sensor, as in the scheme, with a capacitor of 100 µF - 10-25V d.c. at the same level of the instrument.

7.2.6 Measuring the flame signal

The burner is fitted with a sensor to check that a flame is present. The minimum current for control box operation is 70 µA.

The operator Panel displays “30%” (see “**List of parameters**” on page 39, parameter 954).

The burner provides a much higher current, so controls are not normally required.

If, however, you want to measure the current of the flame sensor, follow the instructions as described in “**Maintenance programme**” on page 45.

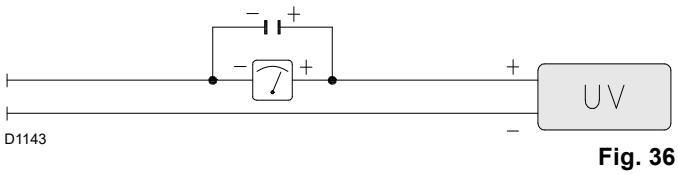

Fig. 36

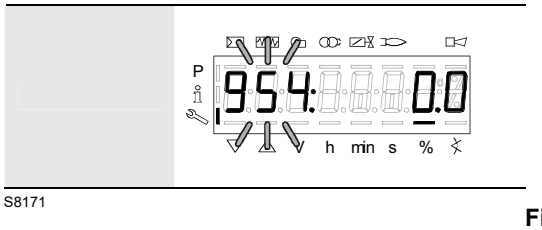

Fig. 37

7.2.7 Flame sensor

To access the flame sensor (Fig. 38), proceed as follows:

➤ unscrew the sensor;
➤ clean the glass 1) from any dust that may have accumulated;
➤ pay attention to the gasket 2) and thermal insulator 3).

ATTENTION

Be extremely careful while troubleshooting the sensor; line voltage is present on some of the terminals when power is on.

Open the master switch to disconnect power before removing or installing the sensor.

7.2.8 Checking the gas pressure on the combustion head

To carry out this operation it is necessary to use a pressure gauge to measure the gas pressure at the combustion head, as shown in Fig. 24 on page 26.

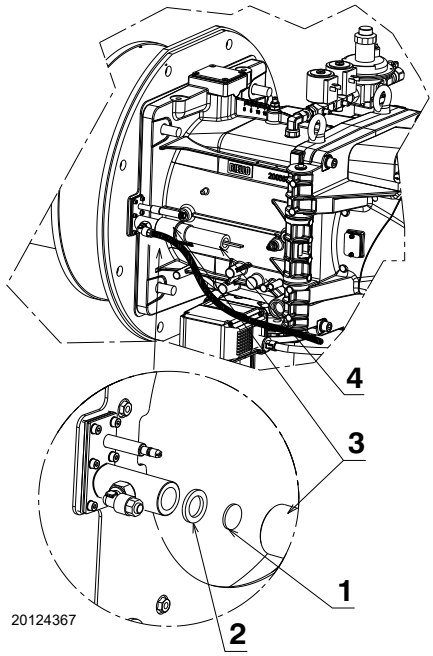

Fig. 38

7.2.9 Electrode extraction

Proceed as follows:

– unscrew the air intake 1)(Fig. 39);
– unscrew the flame sensor and the spacer 3), paying attention to seal and viewing port between the spacer and the electrode (Fig. 38);
– disconnect the electrode cable 2)(Fig. 39);
– unscrew the screws 4);
– extract the electrode 5).

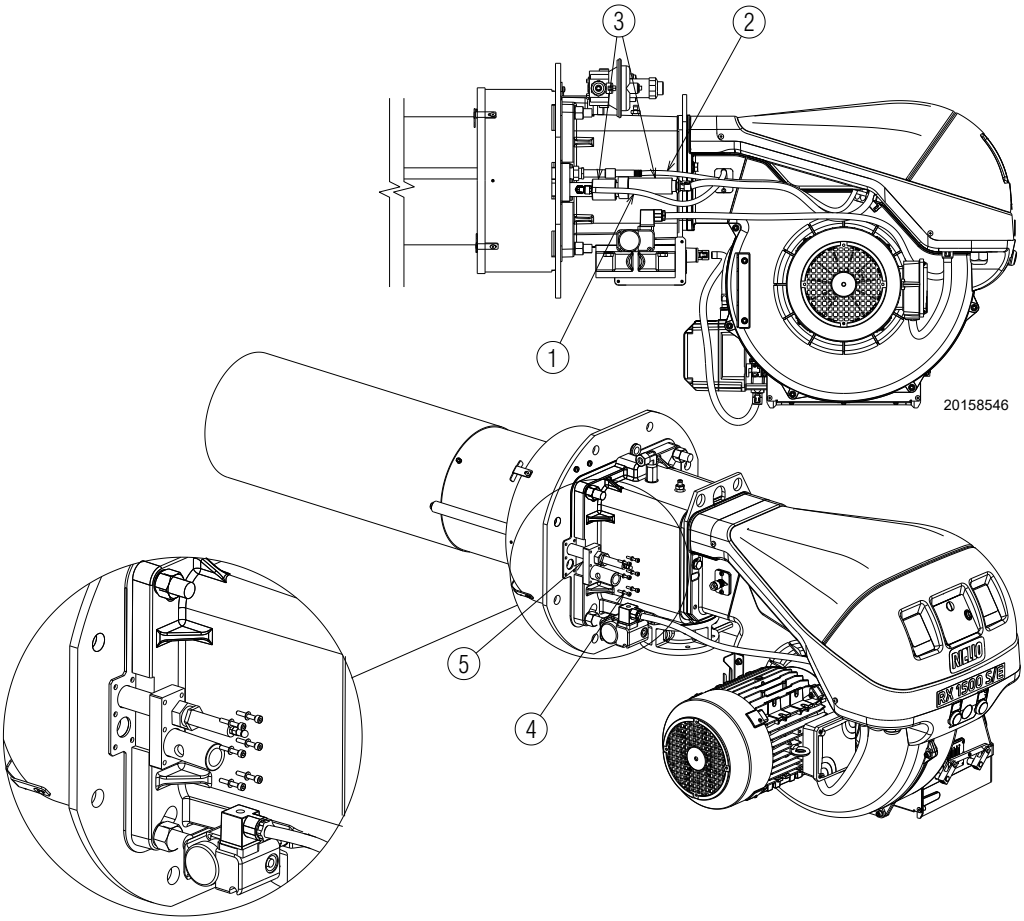

Fig. 39

7.3 Opening the burner

DANGER

Turn off the burner's electrical supply using the main system switch.

DANGER

Turn off the fuel interception tap.

Wait for the components in contact with heat sources to cool down completely.

- ➤ Loosen the 4 screws 1)(Fig. 40) and remove the cover 2);
- ➤ disconnect the sockets 3), 4) and 7);
- ➤ unscrew the UV sensor 5) and the snorkel 6);
- ➤ disconnect the electrode connection 9);
- ➤ remove the screws 12) and pull back the burner on the guides **(*)**.
- ➤ Now it is possible to extract the inner part 10) after having removed the screw 11) (for this, refer to the following paragraph).

ATTENTION

(*) Disconnect the connectors of the thermocouple inside the manifold.

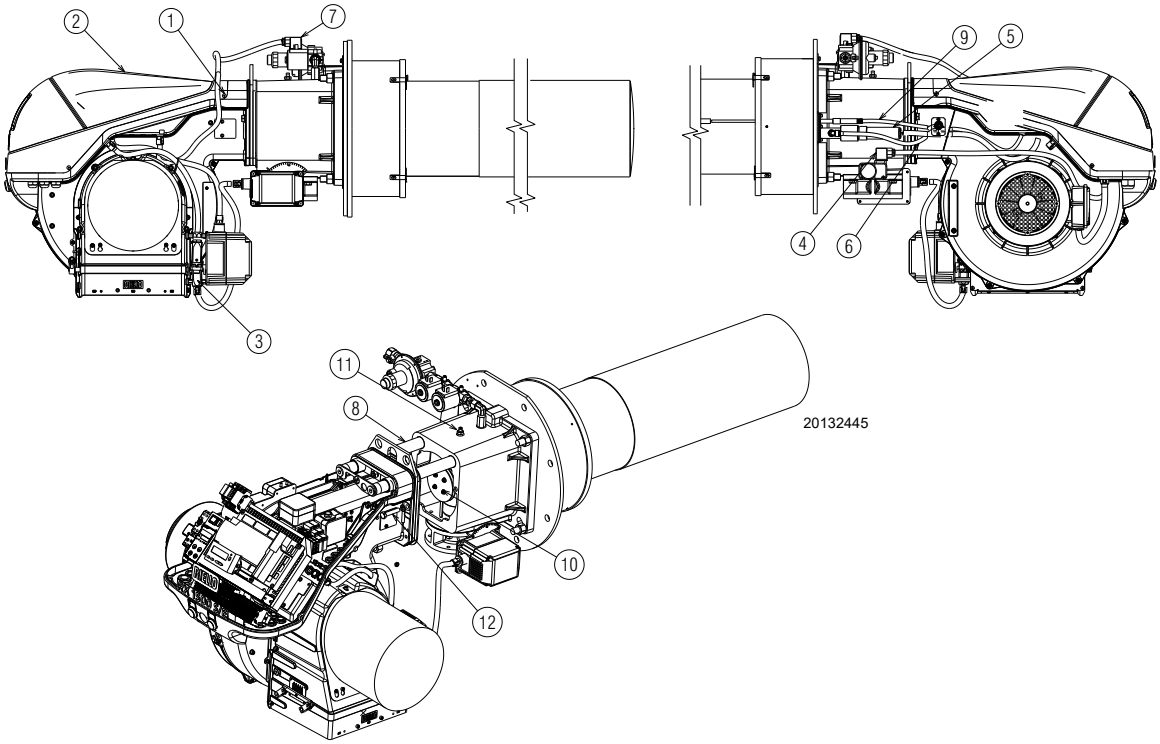

Fig. 40

7.4 Access to head internal part

To remove the gas distributor it is necessary to:
- unscrew the screw/pressure test point 1)(Fig. 41);
- cut the bracket that blocks the probe connection to the gas distributor;
- release the distributor 2) from its seat and remove it.

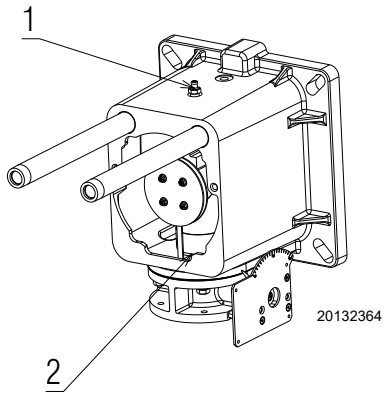

Fig. 41

7.5 Closing the burner

- ➤ Connect the connectors of the thermocouple;
- ➤ push the burner up to the stop on the sleeve;
- ➤ connect the sockets 3), 4) and 7);
- ➤ replace the screws 12), screw the flame sensor 5) and the socket 6);
- ➤ insert the electrode connection 9);
- ➤ reinstall the cover and tighten the screw 1).

After carrying out maintenance, cleaning or checking operations, reassemble the hood and all the safety and protection devices of the burner.

8 Faults - Probable causes - Solutions

If faults arise in ignition or operations, the burner performs a “safety stop”, which is signalled by the red burner lockout LED.

The display of the operator panel visualises alternately the lock-out code and the relative diagnostic.

To restore start-up conditions, refer to the paragraph “**Reset procedure**” on page 31.

When the burner starts up again, the red LED goes out.

ATTENTION

In the event the burner stops, in order to prevent any damage to the installation, do not unblock the burner more than twice in a row.

If the burner locks out for a third time, contact the customer service.

DANGER

In the event there are further lockouts or faults with the burner, the maintenance interventions must only be carried out by qualified, authorised personnel, in accordance with the contents of this manual and in compliance with the standards and regulations of current laws.

8.1 List of error codes

Error code	Diagnostic code	Meaning of the REC 27.100A2 system	Recommended measures
No Comm		**No communication between REC 27.100A2 and RDI21…**	Check the wiring between the control box REC 27.100A2 and display RDI21…
2	**#**	**No flame at the end of TSA1**	
	1	No flame at the end of safety time 1 (TSA1)	
	2	No flame at the end of safety time 2 (TSA2)	
	4	No flame at the end of safety time 1 (TSA1) (software version ≤ V02.00)	
3	**#**	Air pressure error	
	0	Air pressure switch off	
	1	Air pressure switch on	
	4	Air pressure on – Lockout alarm at start	
	20	Air pressure, fuel pressure on - Alarm lock at start	
	68	Air pressure, POC on – Alarm lockout at start	
	84	Air pressure, fuel pressure, POC on - Alarm lockout at start	
4	**#**	**Extraneous light**	
	0	Extraneous light during start-up	
	1	Extraneous light during switch-off	
	2	Extraneous light during start-up – Lockout alarm at start	
	6	Extraneous light during start-up, air pressure - Alarm lockout at start	
	18	Extraneous light during start-up, fuel pressure - Alarm lockout at start	
	24	Extraneous light during start-up, air pressure, fuel pressure - Alarm lockout at start	
	66	Extraneous light during start-up, POC – Alarm lockout at start	
	70	Extraneous light during start-up, air pressure, POC - Alarm lockout at start	
	82	Extraneous light during start-up, fuel pressure, POC - Alarm lockout at start	
	86	Extraneous light during start-up, air pressure, fuel pressure, poc - Alarm lockout at start	
7	**#**	**Loss of flame**	
	0	Loss of flame	
	3	Flame loss (software version ≤ V02.00)	
	3…255	Flame loss during TÜV test (flame loss test)	The diagnostics covers the period of time from the closure of the fuel valves to the point the flame loss was detected (resolution 0.2 s → ϖαλυε 5 = 1 σ).
12	**#**	**Valve leak detection control**	
	0	V1 leaks	Leak test Check if the valve on the side of the gas has any leaks. Check the wiring and make sure that the circuit is open.

Error code	Diagnostic code	Meaning of the REC 27.100A2 system	Recommended measures
	1	V2 leaks	Leak test Check if the valve on the side of the burner has any leaks. Check if the pressure switch for the leak test (PGVP) is closed when gas pressure is not present. Check the wiring and check if there is a short circuit.
	2	Valve leak detection test not possible	The valve leak detection is active, but the minimum gas pressure switch is selected as input for X9-04 (check parameters 238 and 241).
	3	Valve leak detection test not possible	The valve leak detection is active, but no input has been assigned (check parameters 236 and 237).
	4	Valve leak detection not possible	Valve leak detection is active, but 2 inputs have already been assigned (configure parameter 237 or maximum gas Pressure switch or POC).
	5	Valve leak detection not possible	The valve leak detection is active, but 2 inputs have been assigned (check parameters 236 and 237).
14	**#**	**POC**	
	0	POC Open	Check if the closure contact of the valve is closed.
	1	POC Closed	Check the wiring. Check if the closure contact of the valve opens when the valve is checked.
	64	POC Open - Alarm lockout at start	Check the wiring. Check if the closure contact of the valve is closed.
19	80	Fuel pressure, POC - Alarm lockout at start	Check that the pressure switch is closed when no pressure is present from the fuel. Check that there are no short-circuits.
20	**#**	**Pmin**	
	0	Minimum gas/oil pressure absent	Check that there are no line interruptions.
	1	Scarcity of gas - Alarm lockout at start	Check that there are no line interruptions.
21	**#**	**Pmax/POC**	
	0	Pmax: Max. gas/oil pressure exceeded POC: POC open (software version ≤ V02.00)	Check the wiring. POC: Check if the closure contact of the valve is closed. *Check the intervention of the thermal relay or fan contactor fault.*
	1	POC closed (software version ≤ V02.00)	Check the wiring. Check if the closure contact of the valve opens when the valve is checked.
	64	POC Open - Lockout alarm at the start (software version ≤ V02.00)	Check the wiring. Check if the contact of the valve opens when the valve is checked.
22 OFF S	**#**	**Safety circuit/Burner flange**	
	0	Safety circuit open /Burner flange open	
	1	Safety circuit open /Burner flange open - Alarm lockout at start	
	3	Safety circuit open /Burner flange open, extraneous light - Alarm lockout at start	
	5	Safety circuit open /Burner flange open, extraneous light - Alarm lockout at start	
	17	Safety circuit open /Burner flange open, extraneous light - Alarm lockout at start	
	19	Safety circuit open /Burner flange open, extraneous light - Alarm lockout at start	
	21	Safety circuit open /Burner flange open, extraneous light - Alarm lockout at start	
	23	Safety circuit open /Burner flange open, extraneous light, air pressure, fuel pressure - Alarm lockout at start	
	65	Safety circuit /Burner flange open, POC - Alarm lockout at start	
	67	Safety circuit open /Burner flange open, extraneous light, POC - Alarm lockout at start	
	69	Safety circuit open /Burner flange open, air pressure, POC - Alarm lockout at start	
	71	Safety circuit open /Burner flange open, extraneous light, air pressure, POC - Alarm lockout at start	

Error code	Diagnostic code	Meaning of the REC 27.100A2 system	Recommended measures
	81	Safety circuit open /Burner flange open, fuel pressure, POC - Alarm lockout at start	
	83	Safety circuit open /Burner flange open, extraneous light, air pressure, POC - Alarm lockout at start	
	85	Safety circuit open /Burner flange, air pressure, fuel pressure, POC - Alarm lockout at start	
	87	Safety circuit open /Burner flange, extraneous light, air pressure, fuel pressure, POC - Alarm lockout at start	
50 ÷ 58	**#**	**Internal error**	Carry out a reset; if the error arises repeatedly, replace the control box.
60	**0**	**Internal error: no valid load checking device**	Carry out a reset; if the error arises repeatedly, replace the control box.
65 ÷ 67	**#**	**Internal error**	Carry out a reset; if the error arises repeatedly, replace the control box.
70	**#**	**Fuel/air checking error: Calculation position in modulation**	
	23	Invalid load	No valid load.
	26	Curve points not defined	Adjust the curve points of all the actuators.
71	**#**	**Special position not defined**	
	0	Standby position	Set the standby position of all the servomotors used.
	1	Pre-purging position	Set the pre-purging position of all the servomotors used.
	2	Post-purging position	Set the post-purging position of all the servomotors used.
	3	Ignition position	Set the ignition position of all the servomotors used.
72	**#**	**Fuel/air internal checking error**	Carry out a reset; if the error arises repeatedly, replace the control box.
73	**#**	**Fuel/air internal checking error: multistep calculation position**	
	23	Position calculation, invalid stage load	No valid load.
	26	Position calculation, stage curve points not defined	Adjust the curve points of all the servomotors.
75	**#**	**Fuel/air ratio internal checking error: cyclical data check**	
	1	Check synchronisation data, different current load	
	2	Check synchronisation data, different target load	
	4	Check synchronisation data, different target positions	
	16	Check synchronisation data, different positions reached	
76	**#**	**Fuel/air internal checking error**	Carry out a reset; if the error arises repeatedly, replace the control box.
85	**#**	**Reference error of a servomotor**	
	0	Reference error of the fuel servomotor	The reference of the fuel servomotor was not successful. It was not possible to reach the reference point. 1. Check if the servomotors have been inverted. 2. Check if the servomotor is blocked or overloaded.
	1	Reference error of the air servomotor	The reference of the air servomotor was not successful. It was not possible to reach the reference point. 1. Check if the servomotors have been inverted. 2. Check if the servomotor is blocked or overloaded.
	Bit 7 Valence ≥128	Reference error owing to parameter modification	The parameterisation of an actuator (e.g. the reference position) has been modified. This error will be visualised to start up a new reference.
86	**#**	**Fuel servomotor error**	
	0	Position error	It was not possible to reach the target position within the requested tolerance range. 1. Check if the servomotor is blocked or overloaded.
	Bit 0 Valence 1	Circuit open	Circuit open shown on the servomotor connection. 1. Check the wiring (the voltage between pin 5 or 6 and 2 of the X54 connector must be > 0.5 V).
	Bit 3 Valence ≥8	Curve too steep in terms of train ratio	The slope of the curve can correspond to a maximum position modification of 31° between 2 points of the modulation curve.
	Bit 4 Valence ≥16	Deviation of section compared with the last reference	Overloading of the servomotor or servomotor subjected to mechanical torsion. 1. Check if the servomotor is blocked in any point along its range of action. 2. Check if the torque is sufficient for the application.
87	**#**	**Air servomotor error**	

Error code	Diagnostic code	Meaning of the REC 27.100A2 system	Recommended measures
	0	Position error	It was not possible to reach the target position within the requested tolerance range. 1. Check if the servomotor is blocked or overloaded.
	Bit 0 Valence 1	Circuit open	Circuit open shown on the servomotor connection. 1. Check the wiring (the voltage between pin 5 or 6 and 2 of the X54 connector must be > 0.5 V).
	Bit 3 Valence ≥8	Curve too steep in terms of train ratio	The slope of the curve can correspond to a maximum position modification of 31° between 2 points of the modulation curve.
	Bit 4 Valence ≥16	Deviation of section compared with the last reference	Overloading of the servomotor or servomotor subjected to mechanical torsion. 1. Check if the servomotor is blocked in any point along its range of action. 2. Check if the torque is sufficient for the application.
90 - 91	**#**	**Burner internal checking error**	
93	**#**	**Flame signal acquisition error**	
	3	Short circuit of the sensor	Short circuit in the QRB sensor... 1. Check the wiring. 2. Flame sensor probably faulty.
95	**#**	**Relay supervision error**	
	3 Ignition transformers 4 Fuel valve 1 5 Fuel valve 2 6 Fuel valve 3	External power supply - Contact active	Check the wiring.
96	**#**	**Relay supervision error**	
	3 Ignition transformers 4 Fuel valve 1 5 Fuel valve 2 6 Fuel valve 3	The relay contacts have joined together	Check the contacts: 1. Control box connected to the power supply: the fan output must be without voltage. 2. Disconnect the power supply. Disconnect the fan. The resistive connection between the fan output and the neutral wire is not allowed. If one of the 2 tests fails, replace the control box because the contacts are definitively joined together and it is no longer possible to guarantee safety.
97	**#**	**Relay supervision error**	
	0	The safety relay contacts have joined together or the safety relay has been powered by an external power supply	Check the contacts: 1. Control box connected to the power supply: the fan output must be without voltage. 2. Disconnect the power supply. Disconnect the fan. The resistive connection between the fan output and the neutral wire is not allowed. If one of the 2 tests fails, replace the control box because the contacts are definitively joined together and it is no longer possible to guarantee safety.
98	**#**	**Relay supervision error**	
	2 – Safety valve 3 Ignition transformers 4 Fuel valve 1 5 Fuel valve 2 6 Fuel valve 3	The relay does not start up	Carry out a reset; if the error arises repeatedly, replace the unit.
99	**#**	**Relay internal checking error**	Carry out a reset; if the error arises repeatedly, replace the control box.
	3	Relay internal checking error	Carry out a reset; if the error arises repeatedly, replace the control box. Software version V03.10: If error C:99 D:3 occurs during the standardisation of the VSD, temporarily deactivate the Alarm function at the start of the pre-purging phase (parameter 210 = 0) or interrupt the signal controller-ON.
100	**#**	**Relay internal checking error**	Carry out a reset; if the error arises repeatedly, replace the control box.
105	**#**	**Contact sampling internal error**	

Error code	Diagnostic code	Meaning of the REC 27.100A2 system	Recommended measures
	0 Min. pressure switch 1 Max. pressure switch 2 Valve operation test pressure switch 3 Air pressure 4 Load controller open 5 Load controller on/off 6 Load controller closed 7 Safety loop / burner flange 8 Safety valve 9 Ignition transformers 10 Fuel valve 1 11 Fuel valve 2 12 Fuel valve 3 13 Reset	Blocked upon irregularity	Can be caused by capacitive loads or presence of DC voltage on the main power supply of the control box. The diagnostic code indicates the input in which the problem arose
106 ÷ 108	**#**	**Contact request internal error**	Carry out a reset; if the error arises repeatedly, replace the control box
110	**#**	**Voltage monitoring test internal error**	Carry out a reset; if the error arises repeatedly, replace the control box
111	**0**	**Low level of power supply**	Insufficient mains voltage. Conversion of the diagnostic code Voltage value (230 V AC : 1.683)
112	**0**	**Reset power supply voltage**	Error code for the carrying out of a reset in the event of power supply restoration (absence of error)
113	**#**	**Mains voltage supervision internal error**	Carry out a reset; if the error arises repeatedly, replace the control box
115	**#**	**Control box meter internal error**	
116	**0**	**Life cycle of the control box in the critical interval (250,000 Start ups)**	The envisaged life cycle of the control box has been exceeded. Replace it.
117	**0**	**Life cycle of the control box exceeded**	The switch-off threshold has been reached.
120	**0**	**Interruption of fuel limiting meter input**	Too many disturbance impulses on the input of the fuel meter. Improve the electromagnetic compatibility.
121 ÷ 124	**#**	**EEPROM access internal error**	Carry out a reset, repeat and check the last setting of the parameters. Restore the group of parameters: if the error arises repeatedly, replace the control box.
125	**#**	**EEPROM reading access internal error**	Carry out a reset, repeat and check the last setting of the parameters. If the error arises repeatedly, replace the control box.
126	**#**	**EEPROM writing access internal error**	Carry out a reset, repeat and check the last setting of the parameters. If the error arises repeatedly, replace the control box.
127	**#**	**EEPROM access internal error**	Carry out a reset, repeat and check the last setting of the parameters. Restore the group of parameters: if the error arises repeatedly, replace the control box.
128	**0**	**EEPROM access internal error - synchronisation during the initialisation**	Carry out a reset; If the error arises repeatedly, replace the control box.
129	**#**	**EEPROM access internal error – command synchronisation**	Carry out a reset, repeat and check the last setting of the parameters. If the error arises repeatedly, replace the control box.
130	**#**	**EEPROM access internal error - time-out**	Carry out a reset, repeat and check the last setting of the parameters. If the error arises repeatedly, replace the control box.
131	**#**	**EEPROM access internal error - page interrupted**	Carry out a reset, repeat and check the last setting of the parameters. If the error arises repeatedly, replace the control box.
132	**#**	**EEPROM register initialisation internal error**	Carry out a reset; if the error arises repeatedly, replace the control box.
133 ÷ 135	**#**	**EEPROM access internal error – request synchronisation**	Carry out a reset, repeat and check the last setting of the parameters. If the error arises repeatedly, replace the control box.
136	**1**	**Restoration started**	The restoration of a backup has been started (no error)
137	**#**	**Internal error – backup / restoration**	
	157 (-99)	Restoration – OK, but backup < compared with set data of current system	Restoration successful, but the backup data installed are fewer than those currently present in the system.
	239 (-17)	Backup - logging of the backup on RDI21… failed	Perform the reset and repeat backup
	240 (-16)	Reset - no backup in RDI21…	No backup in RDI21…
	241 (-15)	Reset - Interruptions relating to impracticable ASN	The backup has an impracticable ASN and cannot reset the unit

Error code	Diagnostic code	Meaning of the REC 27.100A2 system	Recommended measures
	242 (-14)	Backup – the backup carried out is contradictory	The backup is irregular and cannot be transferred again
	243 (-13)	Backup – the data comparison between the internal microprocessors is irregular	Repeat the reset and backup
	244 (-12)	The backup data are incompatible	The backup data are incompatible with the current version of the software; the restoration is not possible
	245 (-11)	Error in access to the parameter Restore_Complete	Repeat the reset and backup
	246 (-10)	Restoration – time-out during logging in EEPROM	Repeat the reset and backup
	247 (-9)	The data received are contradictory	The series of backup data is not valid; restoration is not possible
	248 (-8)	The restoration cannot currently be carried out	Repeat the reset and backup
	249 (-7)	Restoration – interruption caused by inadequate identification of the burner	The backup has an inadequate identification of the burner and must not be transferred to the control box
	250 (-6)	Backup – the CRC of a page is not correct	The series of backup data is not valid; restoration is not possible
	251 (-5)	Backup – the identification of the burner is not defined	Define the identification of the burner and repeat the backup
	252 (-4)	After restoration, the pages are still in INTERRUPTION	Repeat the reset and backup
	253 (-3)	The restoration cannot currently be carried out	Repeat the reset and backup
	254 (-2)	Interruption owing to transmission error	Repeat the reset and backup
	255 (-1)	Interruption owing to time-out during the restoration	Carry out a reset, check the connections and repeat the backup
146	**#**	**Time-out of the system automation interface**	Refer to the Modbus User Documentation (A7541)
	1	Modbus time-out	
150	**#**	**TÜV test**	
	1 (-1)	Invalid phase	The TÜV test can only be started in phase 60 (operation)
	2 (-2)	The TÜV test default output is too low	The output of the TÜV test must be lower than the minor output limit
	3 (-3)	The TÜV test default output is too high	The output of the TÜV test must be greater than the upper output limit
	4 (-4)	Manual interruption	No error: Manual interruption of the TÜV test by the user
	5 (-5)	TÜV test time-out	No flame loss after the fuel valves have been closed 1. Check for any extraneous lights 2. Check that there are no short-circuits 3. Check whether one of the valves is leaking
165	**#**	**Internal error**	
166	**0**	**Watchdog reset internal error**	
167	**#**	**Manual lockout**	The control box has been manually blocked (no error)
	1	Manual lockout from remote reset command	
	2	Manual lockout from RDI21…	
	3	Manual lockout from PC interface	
	8	Manual lockout from RDI21… Timeout/interrupted communication	During a regulation of the curve via the operating panel RDI21…the timeout for the operating menu is passed (setting via the 127 parameter), or else the communication between REC 27.100A2 and RDI21... has been interrupted
	9	Manual lockout from PC interface Communication interrupted	During an adjustment of the curve via the PC interface, the communication between REC 27.100A2 and the operator panel has been interrupted for more than 30 seconds
	33	Manual lockout after the PC tool has performed a tentative reset	The PC tool has performed a tentative reset, even if the system has worked correctly
168 ÷ 171	**#**	**Internal error management**	Carry out a reset; if the error arises repeatedly, replace the control box
200 off	**#**	**System free of errors**	No error
201 off VA	**#**	**Lockout or error at start**	Lockout or error due to lack of unit parameter settings
	Bit 0 Valency 1	No valid operation mode	
	Bit 1 Valency 2..3	No fuel train defined	
	Bit 2 Valency 4..7	No curve defined	
	Bit 3 Valency 8..15	Standardisation speed not defined	
	Bit 4 Valency 16..31	Backup / Reset impossible	

Error code	Diagnostic code	Meaning of the REC 27.100A2 system	Recommended measures
202	**#**	**Selection of internal operation mode**	Redefine the operation mode (parameter 201)
203	**#**	**Internal error**	Redefine the operation mode (parameter 201) Carry out a reset; if the error arises repeatedly, replace the control box
204	**Phase number**	**Program stop**	The program stop is active (no error)
205	**#**	**Internal error**	Carry out a reset; if the error arises repeatedly, replace the control box
206	**0**	**Combination of control box and operator panel not allowed**	
207	**#**	**Compatibility of control box with operator panel**	
	0	Obsolete version of control box	
	1	Obsolete version of operator panel	
208 - 209	**#**	**Internal error**	Carry out a reset; if the error arises repeatedly, replace the control box
210	0	The selected operating mode is not released for the standard unit	Select an operating mode released for the standard unit
240	**#**	**Internal error**	Carry out a reset; if the error arises repeatedly, replace the control box
245	**#**	**Internal error**	Carry out a reset; if the error arises repeatedly, replace the control box
250	**#**	**Internal error**	Carry out a reset; if the error arises repeatedly, replace the control box

Tab. U

A Appendix - Accessories

Software interface kit (ACS410 + OCI410.30) - Service Level

Burner	Code
RX 1500 S/E	3010436

Filter kit

Burner	Code
RX 1500 S/E	20164652

RWF kit

Burner	Kit description	Codice
RX 1500 S/E	RWF 50.2 - Basic version with 3 position output RWF 55.5 - Complete with RS-485 interface	20099869 20099905

Gas trains in compliance with EN 676

Please refer to manual.

B Appendix - Electrical panel layout

1	**Index of layouts**
2	Indication of references
3	Layout of unifilar output
4	Layout of unifilar output
5	REC 27... operational layout
6	REC 27... operational layout
7	REC 27... operational layout
8	Electrical connections for output power regulator (internal)
9	Electrical connections set by installer
10	Electrical connections set by installer
11	Input/output of the output power regulator

2 Indication of references

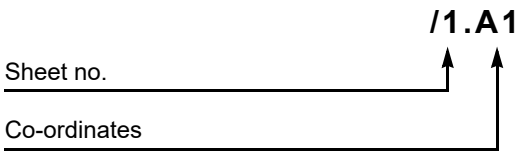

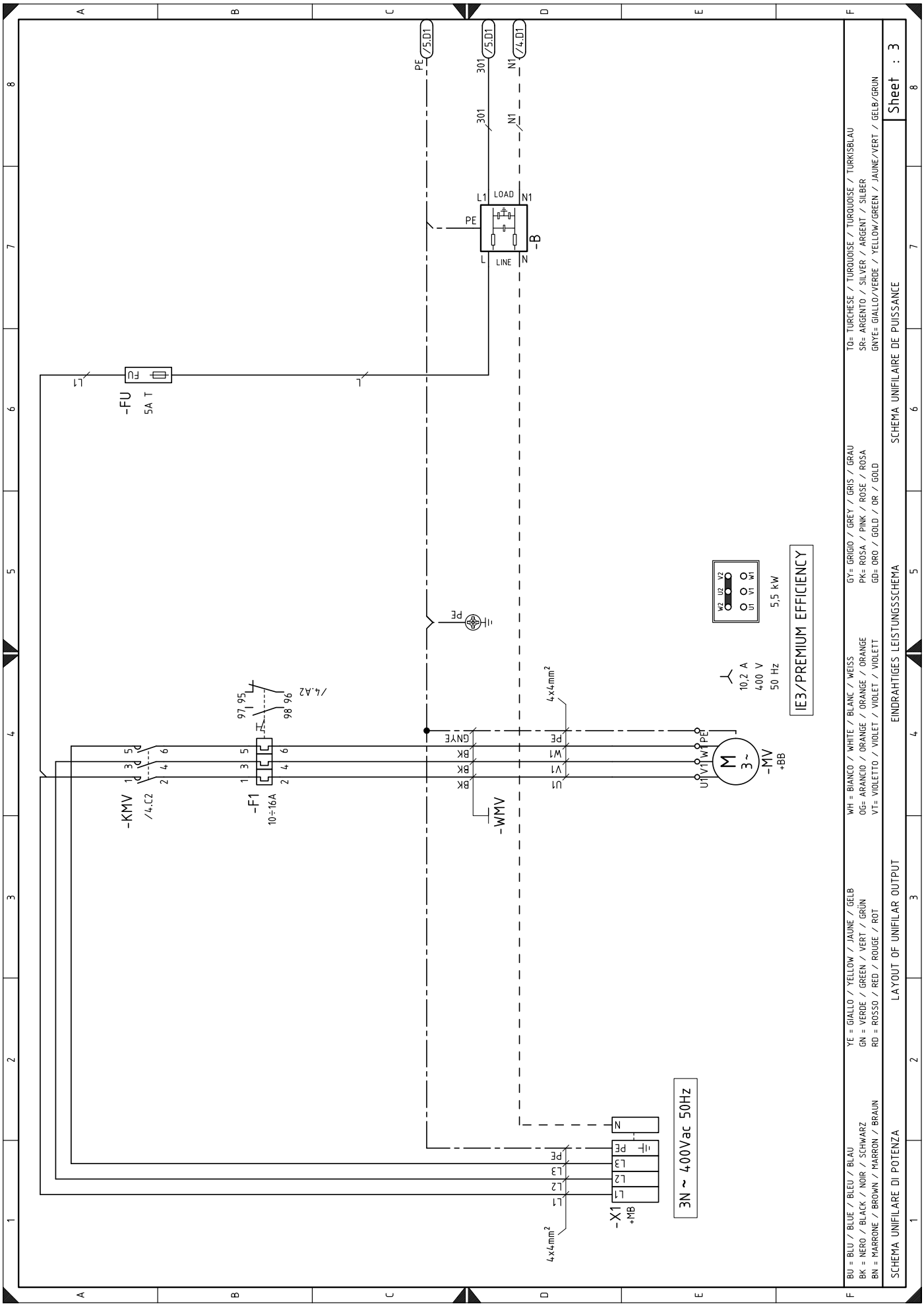
IE3/PREMIUM EFFICIENCY
3N ~ 400Vac 50Hz
-FU
5A T
-KMV
/4.C2
-F1
10÷16A
-WMV
-MV
+BB
-B
LOAD
LINE
-X1
+MB
10,2 A
400 V
50 Hz
5,5 kW
4x4mm²
BU = BLU / BLUE / BLEU / BLAU
BK = NERO / BLACK / NOIR / SCHWARZ
BN = MARRONE / BROWN / MARRON / BRAUN
YE = GIALLO / YELLOW / JAUNE / GELB
GN = VERDE / GREEN / VERT / GRÜN
RD = ROSSO / RED / ROUGE / ROT
WH = BIANCO / WHITE / BLANC / WEISS
OG= ARANCIO / ORANGE / ORANGE / ORANGE
VT= VIOLETTO / VIOLET / VIOLET / VIOLETT
GY= GRIGIO / GREY / GRIS / GRAU
PK= ROSA / PINK / ROSE / ROSA
GD= ORO / GOLD / OR / GOLD
TQ= TURCHESE / TURQUOISE / TURQUOISE / TURKISBLAU
SR= ARGENTO / SILVER / ARGENT / SILBER
GNYE= GIALLO/VERDE / YELLOW/GREEN / JAUNE/VERT / GELB/GRÜN
SCHEMA UNIFILARE DI POTENZA
LAYOUT OF UNIFILAR OUTPUT
EINDRAHTIGES LEISTUNGSSCHEMA
SCHEMA UNIFILAIRE DE PUISSANCE
Sheet : 3

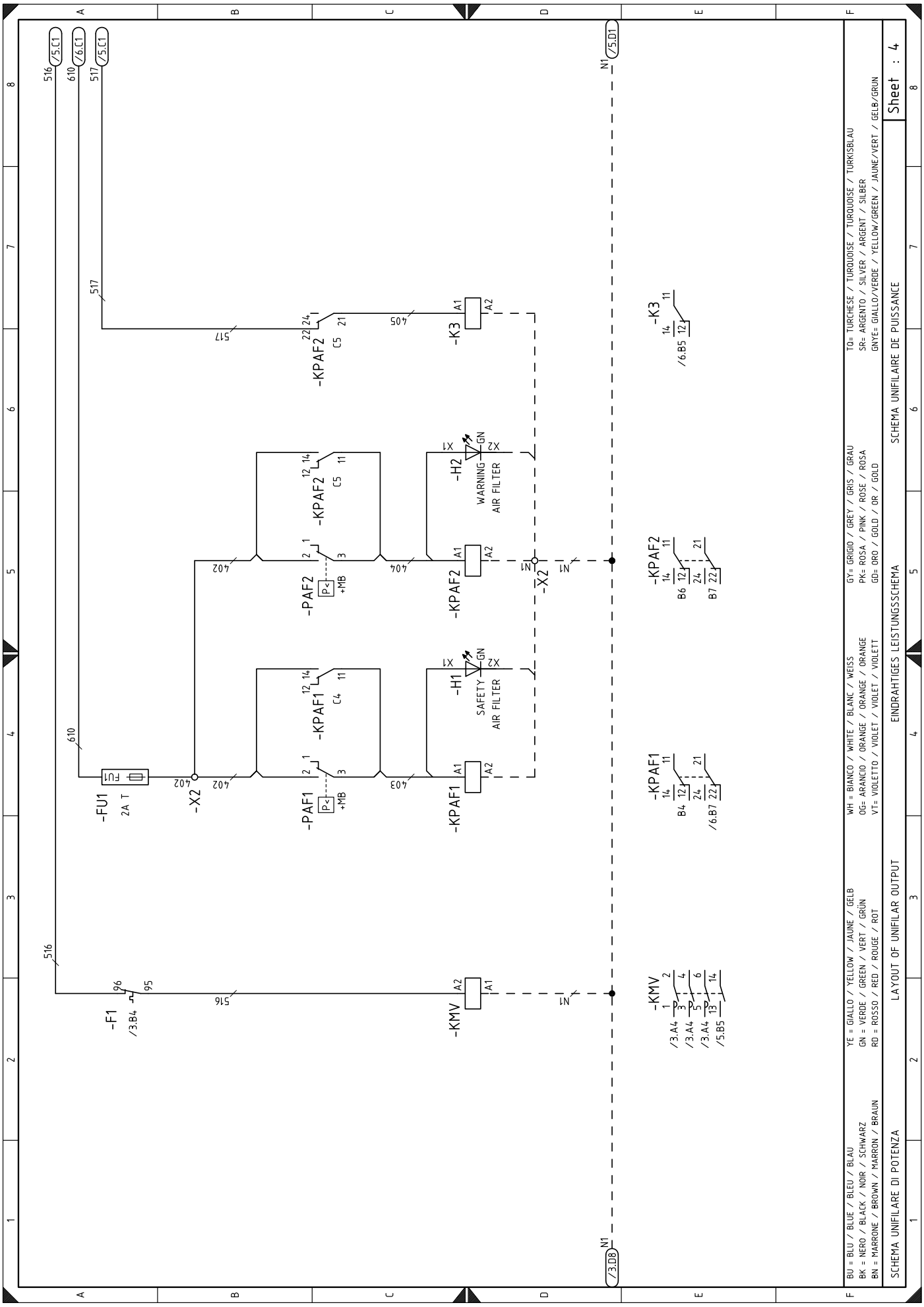
-FU1
2A T
-F1
/3.B4
-X2
-PAF1
+MB
-KPAF1
C4
-PAF2
+MB
-KPAF2
C5
-KMV
-H1
SAFETY
AIR FILTER
-H2
WARNING
AIR FILTER
-K3
/6.B5
-KPAF2
B6
B7
-KPAF1
B4
/6.B7
-KMV
/3.A4
/3.A4
/3.A4
/5.B5
/5.C1
/6.C1
/5.C1
/5.D1
/3.D8
BU = BLU / BLUE / BLEU / BLAU
BK = NERO / BLACK / NOIR / SCHWARZ
BN = MARRONE / BROWN / MARRON / BRAUN
YE = GIALLO / YELLOW / JAUNE / GELB
GN = VERDE / GREEN / VERT / GRÜN
RD = ROSSO / RED / ROUGE / ROT
WH = BIANCO / WHITE / BLANC / WEISS
OG= ARANCIO / ORANGE / ORANGE / ORANGE
VT= VIOLETTO / VIOLET / VIOLET / VIOLETT
GY= GRIGIO / GREY / GRIS / GRAU
PK= ROSA / PINK / ROSE / ROSA
GD= ORO / GOLD / OR / GOLD
TQ= TURCHESE / TURQUOISE / TURQUOISE / TURKISBLAU
SR= ARGENTO / SILVER / ARGENT / SILBER
GNYE= GIALLO/VERDE / YELLOW/GREEN / JAUNE/VERT / GELB/GRÜN
SCHEMA UNIFILARE DI POTENZA
LAYOUT OF UNIFILAR OUTPUT
EINDRAHTIGES LEISTUNGSSCHEMA
SCHEMA UNIFILAIRE DE PUISSANCE
Sheet : 4

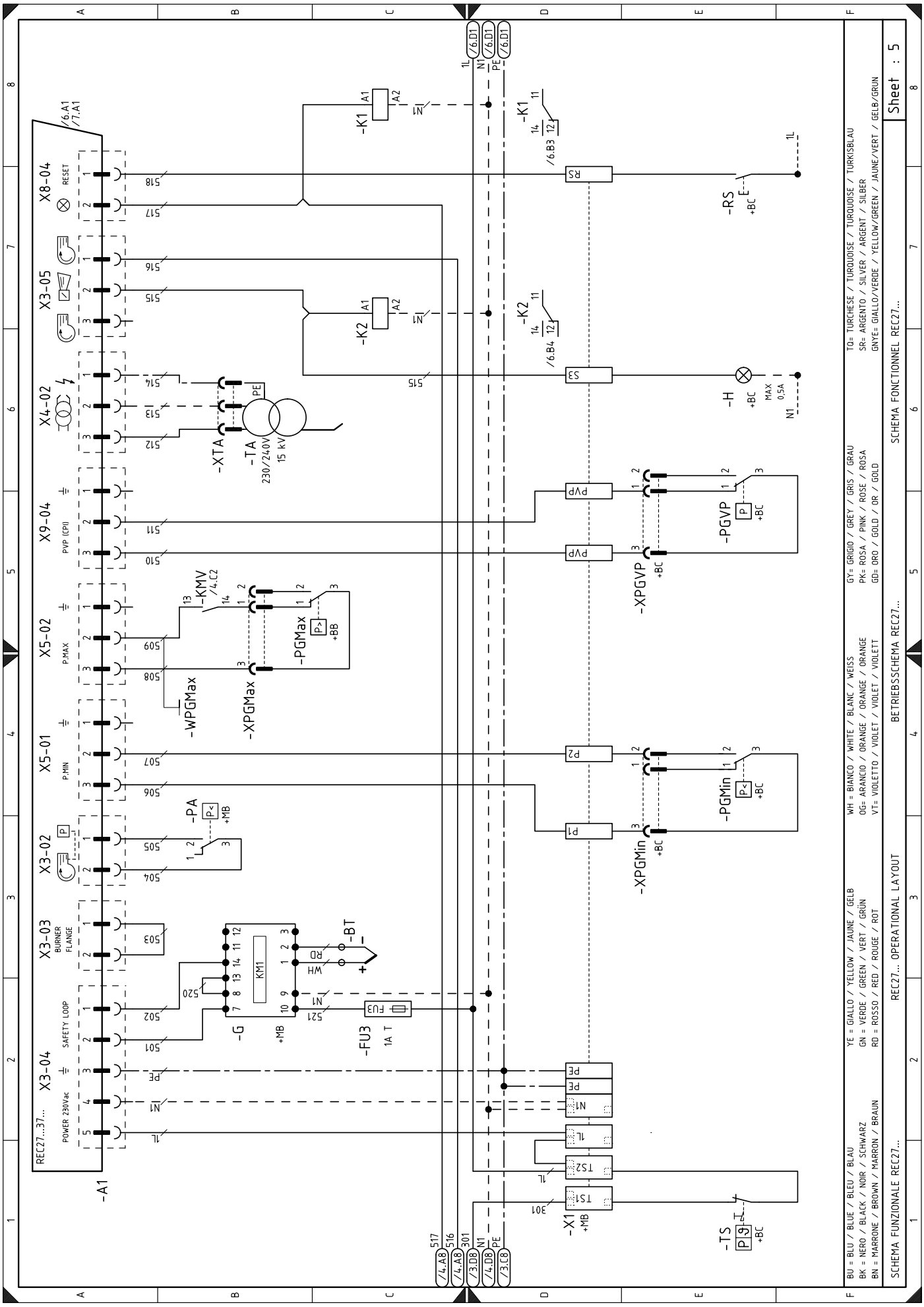
REC27...37...
POWER 230Vac
SAFETY LOOP
BURNER FLANGE
P.MIN
P.MAX
PVP (CPI)
RESET
X3-04
X3-03
X3-02
X5-01
X5-02
X9-04
X4-02
X3-05
X8-04
-A1
-G
KM1
-FU3
1A T
-BT
-PA
-WPGMax
-XPGMax
-KMV
-PGMax
-XTA
-TA
230/240V
15 kV
-K1
-K2
-RS
-H
MAX 0,5A
-PGVP
-XPGVP
-PGMin
-XPGMin
-X1
-TS
BU = BLU / BLEU / BLAU
BK = NERO / BLACK / NOIR / SCHWARZ
BN = MARRONE / BROWN / MARRON / BRAUN
YE = GIALLO / YELLOW / JAUNE / GELB
GN = VERDE / GREEN / VERT / GRÜN
RD = ROSSO / RED / ROUGE / ROT
WH = BIANCO / WHITE / BLANC / WEISS
OG= ARANCIO / ORANGE / ORANGE / ORANGE
VT= VIOLETTO / VIOLET / VIOLET / VIOLETT
GY= GRIGIO / GREY / GRIS / GRAU
PK= ROSA / PINK / ROSE / ROSA
GD= ORO / GOLD / OR / GOLD
TQ= TURCHESE / TURQUOISE / TURQUOISE / TURKISBLAU
SR= ARGENTO / SILVER / ARGENT / SILBER
GNYE= GIALLO/VERDE / YELLOW/GREEN / JAUNE/VERT / GELB/GRÜN
SCHEMA FUNZIONALE REC27...
REC27... OPERATIONAL LAYOUT
BETRIEBSSCHEMA REC27...
SCHEMA FONCTIONNEL REC27...
Sheet : 5

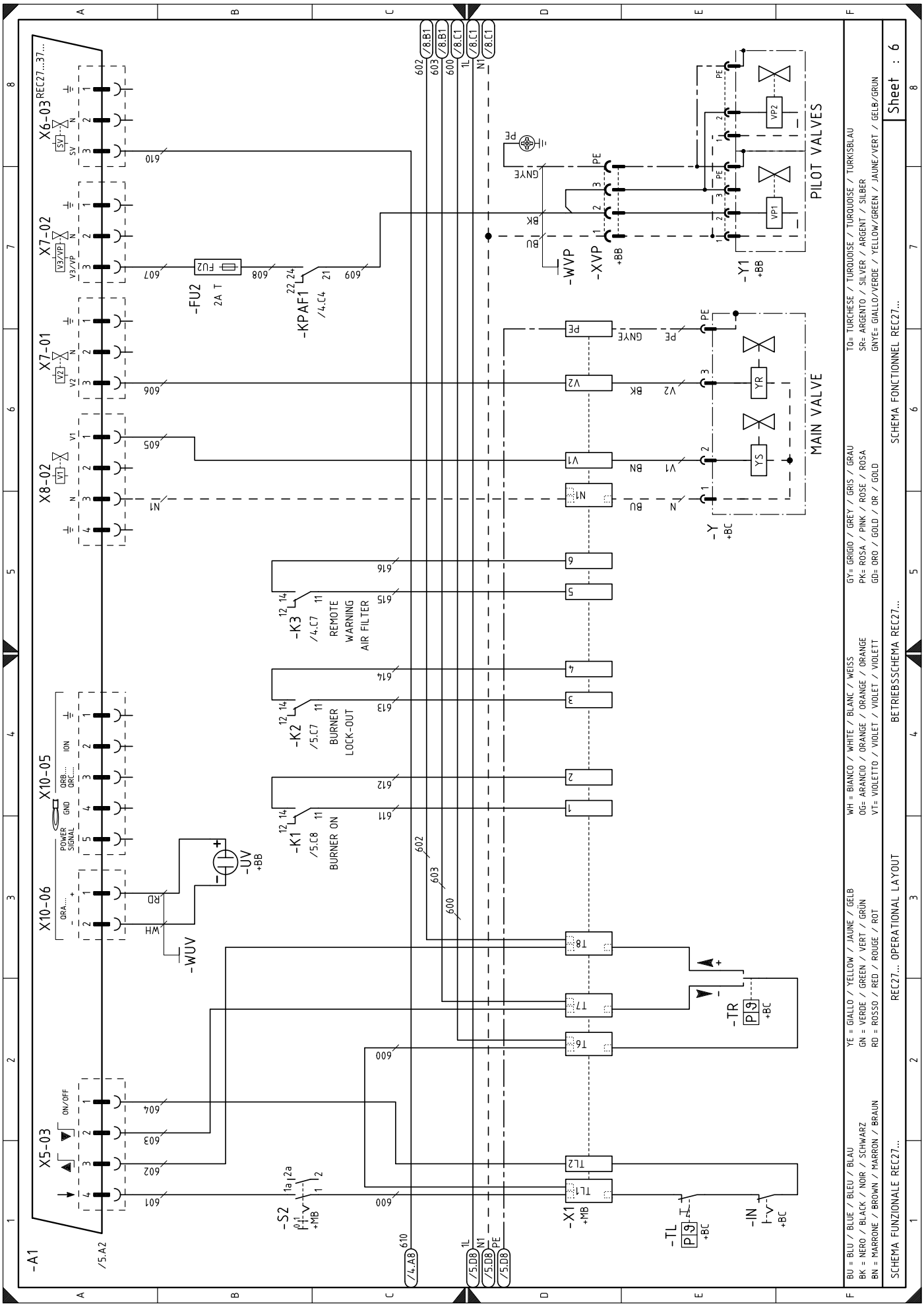

-A1
/5.A2
X5-03
ON/OFF
X10-06
X10-05
POWER SIGNAL
GND
ION
X8-02
X7-01
X7-02
X6-03
REC27...37...
-FU2
2A T
-KPAF1
/4.C4
-K1
/5.C8
BURNER ON
-K2
/5.C7
BURNER LOCK-OUT
-K3
/4.C7
REMOTE WARNING AIR FILTER
-UV
+BB
-WUV
-S2
+MB
-X1
+MB
-TL
+BC
-IN
+BC
-TR
+BC
-Y
+BC
-Y1
+BB
-XVP
+BB
-WVP
PILOT VALVES
MAIN VALVE
BU = BLU / BLUE / BLEU / BLAU
BK = NERO / BLACK / NOIR / SCHWARZ
BN = MARRONE / BROWN / MARRON / BRAUN
YE = GIALLO / YELLOW / JAUNE / GELB
GN = VERDE / GREEN / VERT / GRÜN
RD = ROSSO / RED / ROUGE / ROT
WH = BIANCO / WHITE / BLANC / WEISS
OG= ARANCIO / ORANGE / ORANGE / ORANGE
VT= VIOLETTO / VIOLET / VIOLET / VIOLETT
GY= GRIGIO / GREY / GRIS / GRAU
PK= ROSA / PINK / ROSE / ROSA
GD= ORO / GOLD / OR / GOLD
TQ= TURCHESE / TURQUOISE / TURQUOISE / TURKISBLAU
SR= ARGENTO / SILVER / ARGENT / SILBER
GNYE= GIALLO/VERDE / YELLOW/GREEN / JAUNE/VERT / GELB/GRUN
SCHEMA FUNZIONALE REC27...
REC27... OPERATIONAL LAYOUT
BETRIEBSSCHEMA REC27...
SCHEMA FONCTIONNEL REC27...
Sheet : 6

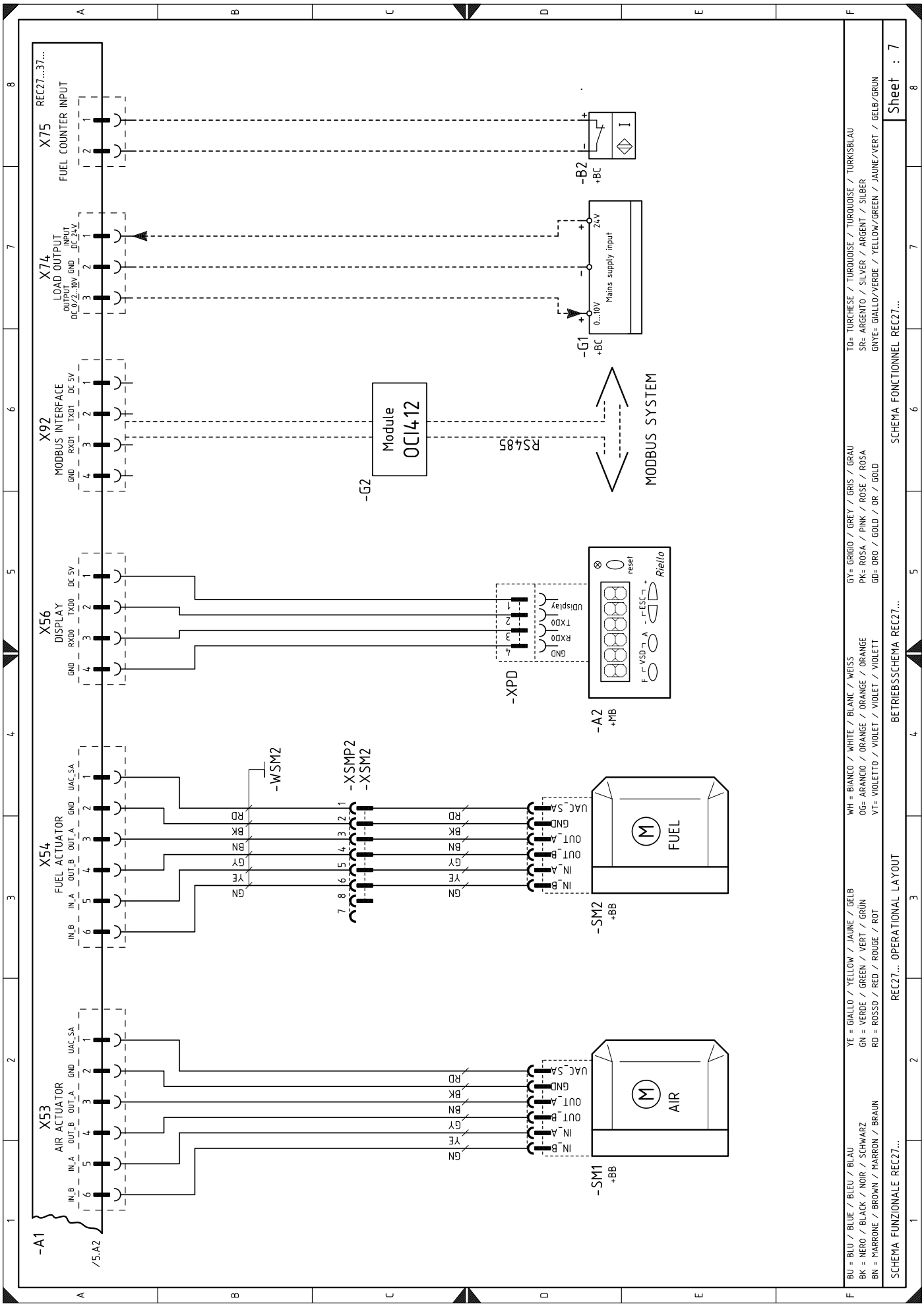
X75
FUEL COUNTER INPUT
REC27...37...
X74
LOAD OUTPUT
OUTPUT DC_0/2...10V
GND
INPUT DC_24V
X92
MODBUS INTERFACE
GND RXD1 TXD1 DC 5V
X56
DISPLAY
GND RXD0 TXD0 DC 5V
X54
FUEL ACTUATOR
IN_B IN_A OUT_B OUT_A GND UAC_SA
X53
AIR ACTUATOR
IN_B IN_A OUT_B OUT_A GND UAC_SA
-A1
/5.A2
-B2
+BC
-G1
+BC
0...10V
Mains supply input
24V
-G2
Module
OCI412
RS485
MODBUS SYSTEM
-A2
+MB
-XPD
GND
RXD0
TXD0
UDisplay
reset
Riello
-WSM2
-XSMP2
-XSM2
-SM2
+BB
FUEL
-SM1
+BB
AIR
UAC_SA
GND
OUT_A
OUT_B
IN_A
IN_B
RD
BK
BN
GY
YE
GN
BU = BLU / BLEU / BLAU
BK = NERO / BLACK / NOIR / SCHWARZ
BN = MARRONE / BROWN / MARRON / BRAUN
YE = GIALLO / YELLOW / JAUNE / GELB
GN = VERDE / GREEN / VERT / GRÜN
RD = ROSSO / RED / ROUGE / ROT
WH = BIANCO / WHITE / BLANC / WEISS
OG= ARANCIO / ORANGE / ORANGE / ORANGE
VT= VIOLETTO / VIOLET / VIOLET / VIOLETT
GY= GRIGIO / GREY / GRIS / GRAU
PK= ROSA / PINK / ROSE / ROSA
GD= ORO / GOLD / OR / GOLD
TQ= TURCHESE / TURQUOISE / TURQUOISE / TURKISBLAU
SR= ARGENTO / SILVER / ARGENT / SILBER
GNYE= GIALLO/VERDE / YELLOW/GREEN / JAUNE/VERT / GELB/GRÜN
SCHEMA FUNZIONALE REC27...
REC27... OPERATIONAL LAYOUT
BETRIEBSSCHEMA REC27...
SCHEMA FONCTIONNEL REC27...
Sheet : 7

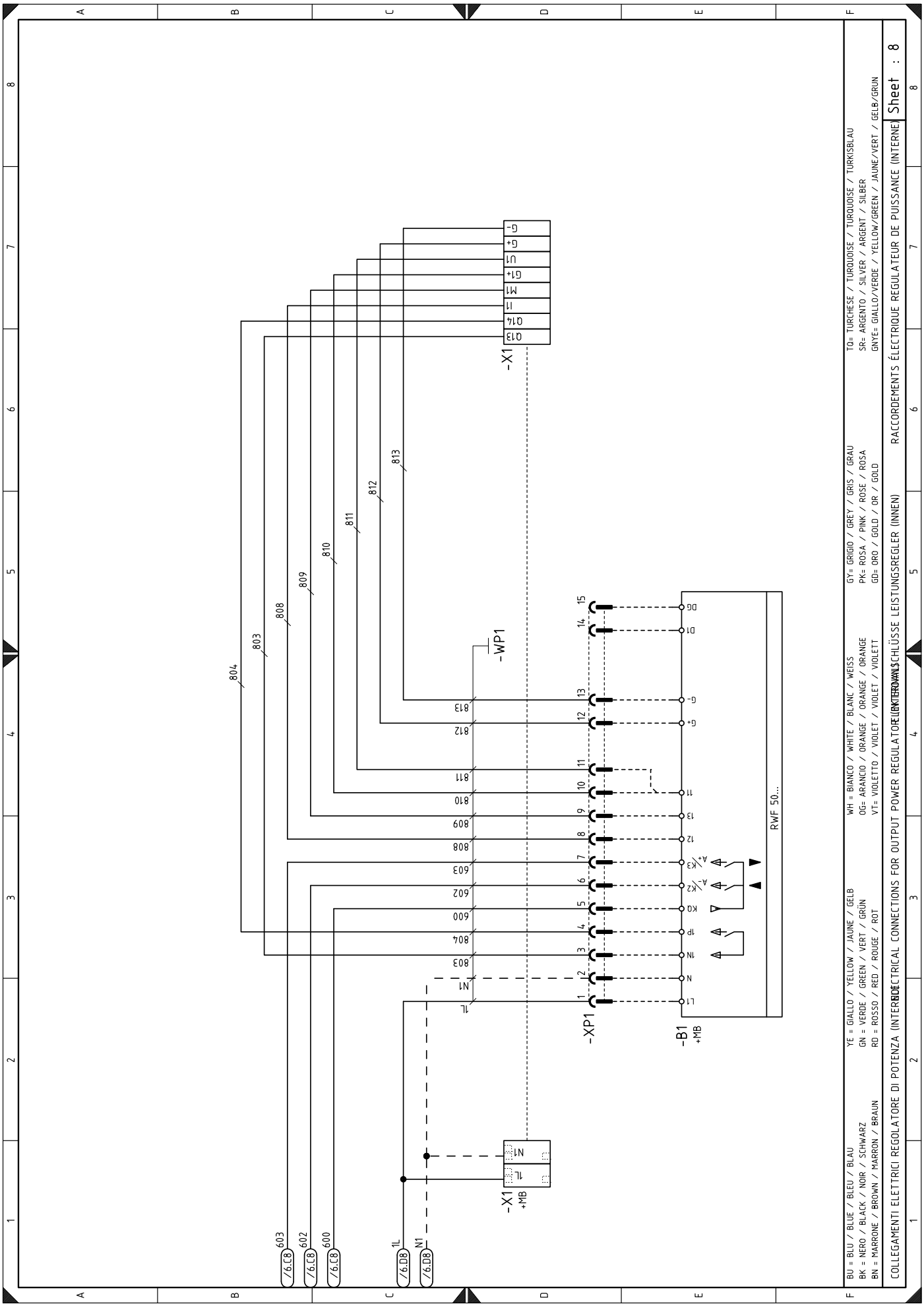
-X1
-WP1
-XP1
-B1
+MB
RWF 50...
BU = BLU / BLUE / BLEU / BLAU
BK = NERO / BLACK / NOIR / SCHWARZ
BN = MARRONE / BROWN / MARRON / BRAUN
YE = GIALLO / YELLOW / JAUNE / GELB
GN = VERDE / GREEN / VERT / GRÜN
RD = ROSSO / RED / ROUGE / ROT
WH = BIANCO / WHITE / BLANC / WEISS
OG= ARANCIO / ORANGE / ORANGE / ORANGE
VT= VIOLETTO / VIOLET / VIOLET / VIOLETT
GY= GRIGIO / GREY / GRIS / GRAU
PK= ROSA / PINK / ROSE / ROSA
GD= ORO / GOLD / OR / GOLD
TQ= TURCHESE / TURQUOISE / TURQUOISE / TURKISBLAU
SR= ARGENTO / SILVER / ARGENT / SILBER
GNYE= GIALLO/VERDE / YELLOW/GREEN / JAUNE/VERT / GELB/GRUN
COLLEGAMENTI ELETTRICI REGOLATORE DI POTENZA (INTERNO)
ELECTRICAL CONNECTIONS FOR OUTPUT POWER REGULATOR (INTERNAL)
RACCORDEMENTS ÉLECTRIQUE REGULATEUR DE PUISSANCE (INTERNE)
Sheet : 8

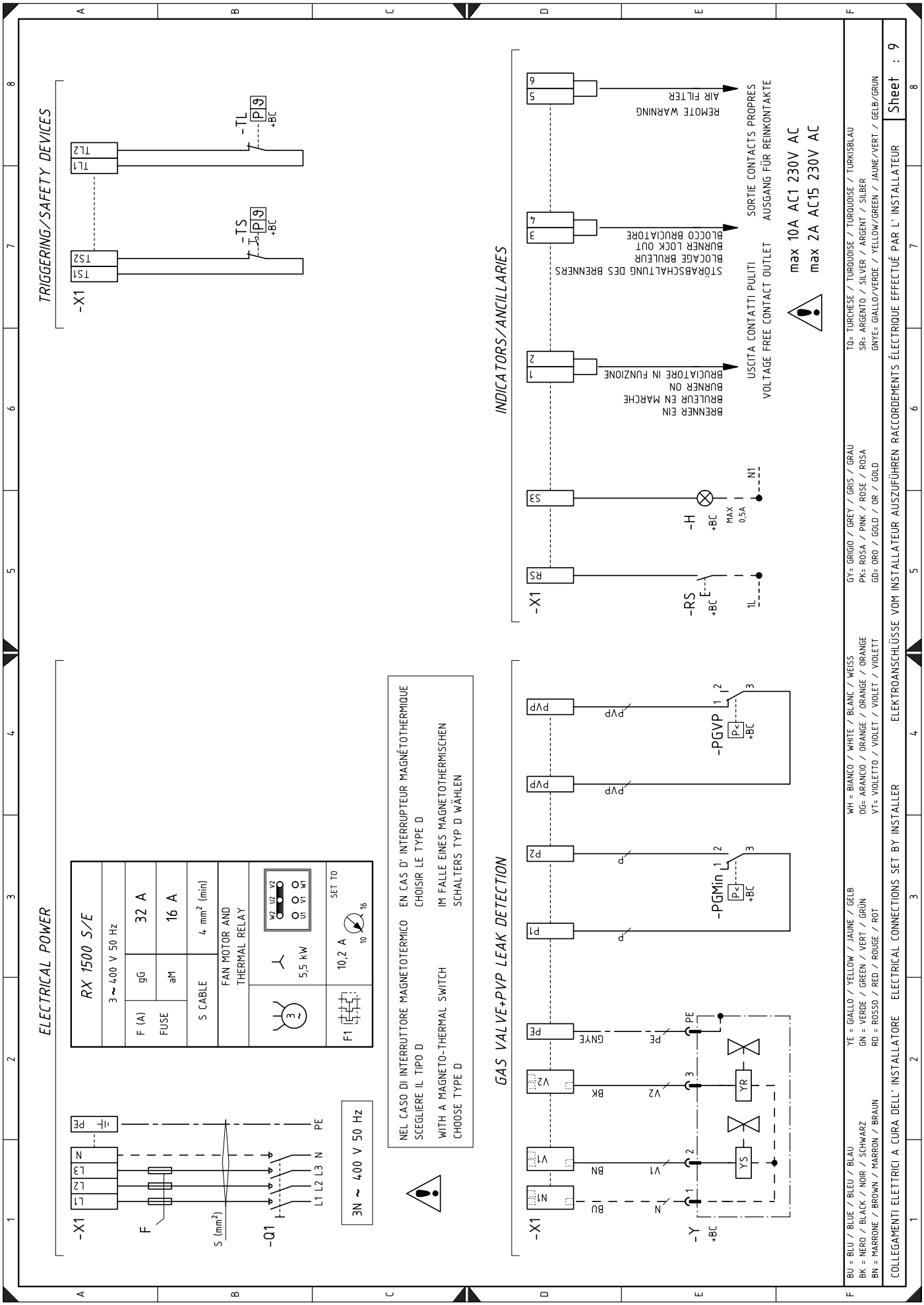
TRIGGERING/SAFETY DEVICES
-X1
TS1
TS2
TL1
TL2
-TS
-TL
+BC
INDICATORS/ANCILLARIES
-X1
RS
S3
-RS
-H
+BC
MAX 0,5A
N1
1L
BRENNER EIN
BRULEUR EN MARCHE
BURNER ON
BRUCIATORE IN FUNZIONE
STÖRABSCHALTUNG DES BRENNERS
BLOCAGE BRULEUR
BURNER LOCK OUT
BLOCCO BRUCIATORE
REMOTE WARNING
AIR FILTER
USCITA CONTATTI PULITI
VOLTAGE FREE CONTACT OUTLET
SORTIE CONTACTS PROPRES
AUSGANG FÜR REINKONTAKTE
max 10A AC1 230V AC
max 2A AC15 230V AC
ELECTRICAL POWER
-X1
L1
L2
L3
N
PE
F
S (mm²)
-Q1
L1 L2 L3 N
PE
3N ~ 400 V 50 Hz
RX 1500 S/E
3 ~ 400 V 50 Hz
F (A)
FUSE
gG
32 A
aM
16 A
S CABLE
4 mm² (min)
FAN MOTOR AND
THERMAL RELAY
5,5 kW
W2 U2 V2
U1 V1 W1
F1
10,2 A
SET TO
10
16
NEL CASO DI INTERRUTTORE MAGNETOTERMICO
SCEGLIERE IL TIPO D
WITH A MAGNETO-THERMAL SWITCH
CHOOSE TYPE D
EN CAS D' INTERRUPTEUR MAGNÉTOTHERMIQUE
CHOISIR LE TYPE D
IM FALLE EINES MAGNETOTHERMISCHEN
SCHALTERS TYP D WÄHLEN
GAS VALVE+PVP LEAK DETECTION
-X1
N1
V1
V2
PE
P1
P2
PVP
PVP
-Y
+BC
BU
BN
BK
GNYE
N
V1
V2
PE
YS
YR
-PGMin
-PGVP
+BC
BU = BLU / BLUE / BLEU / BLAU
BK = NERO / BLACK / NOIR / SCHWARZ
BN = MARRONE / BROWN / MARRON / BRAUN
YE = GIALLO / YELLOW / JAUNE / GELB
GN = VERDE / GREEN / VERT / GRÜN
RD = ROSSO / RED / ROUGE / ROT
WH = BIANCO / WHITE / BLANC / WEISS
OG= ARANCIO / ORANGE / ORANGE / ORANGE
VT= VIOLETTO / VIOLET / VIOLET / VIOLETT
GY= GRIGIO / GREY / GRIS / GRAU
PK= ROSA / PINK / ROSE / ROSA
GD= ORO / GOLD / OR / GOLD
TQ= TURCHESE / TURQUOISE / TURQUOISE / TURKISBLAU
SR= ARGENTO / SILVER / ARGENT / SILBER
GNYE= GIALLO/VERDE / YELLOW/GREEN / JAUNE/VERT / GELB/GRUN
COLLEGAMENTI ELETTRICI A CURA DELL' INSTALLATORE
ELECTRICAL CONNECTIONS SET BY INSTALLER
ELEKTROANSCHLÜSSE VOM INSTALLATEUR AUSZUFÜHREN
RACCORDEMENTS ÉLECTRIQUE EFFECTUÉ PAR L' INSTALLATEUR
Sheet : 9

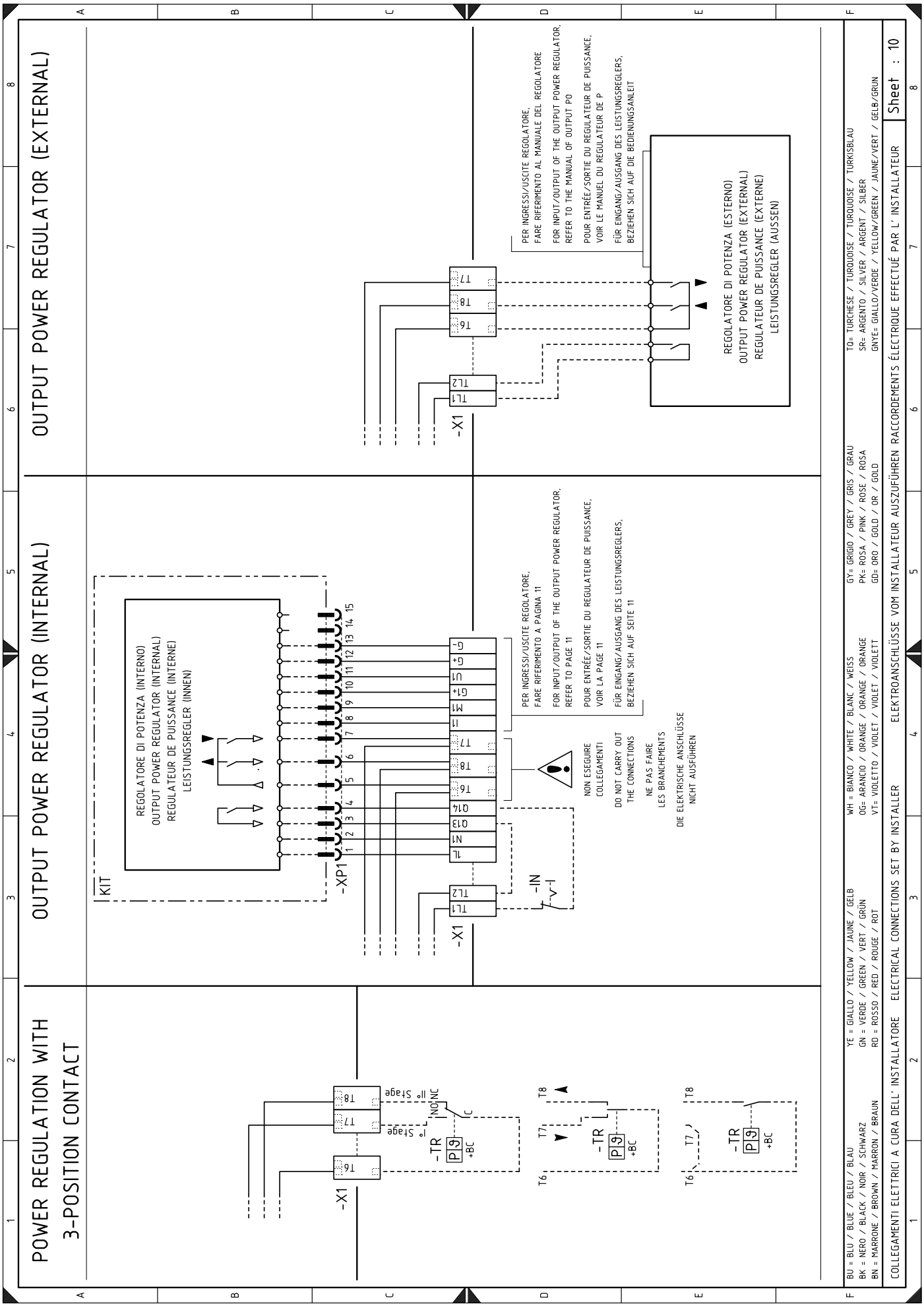
POWER REGULATION WITH 3-POSITION CONTACT
OUTPUT POWER REGULATOR (INTERNAL)
OUTPUT POWER REGULATOR (EXTERNAL)
KIT
REGOLATORE DI POTENZA (INTERNO)
OUTPUT POWER REGULATOR (INTERNAL)
REGULATEUR DE PUISSANCE (INTERNE)
LEISTUNGSREGLER (INNEN)
-XP1
-X1
-IN
-TR
PER INGRESSI/USCITE REGOLATORE, FARE RIFERIMENTO A PAGINA 11
FOR INPUT/OUTPUT OF THE OUTPUT POWER REGULATOR, REFER TO PAGE 11
POUR ENTRÉE/SORTIE DU REGULATEUR DE PUISSANCE, VOIR LA PAGE 11
FÜR EINGANG/AUSGANG DES LEISTUNGSREGLERS, BEZIEHEN SICH AUF SEITE 11
NON ESEGUIRE COLLEGAMENTI
DO NOT CARRY OUT THE CONNECTIONS
NE PAS FAIRE LES BRANCHEMENTS
DIE ELEKTRISCHE ANSCHLÜSSE NICHT AUSFÜHREN
PER INGRESSI/USCITE REGOLATORE, FARE RIFERIMENTO AL MANUALE DEL REGOLATORE
FOR INPUT/OUTPUT OF THE OUTPUT POWER REGULATOR, REFER TO THE MANUAL OF OUTPUT PO
POUR ENTRÉE/SORTIE DU REGULATEUR DE PUISSANCE, VOIR LE MANUEL DU REGULATEUR DE P
FÜR EINGANG/AUSGANG DES LEISTUNGSREGLERS, BEZIEHEN SICH AUF DIE BEDIENUNGSANLEIT
REGOLATORE DI POTENZA (ESTERNO)
OUTPUT POWER REGULATOR (EXTERNAL)
REGULATEUR DE PUISSANCE (EXTERNE)
LEISTUNGSREGLER (AUSSEN)
BU = BLU / BLUE / BLEU / BLAU
BK = NERO / BLACK / NOIR / SCHWARZ
BN = MARRONE / BROWN / MARRON / BRAUN
YE = GIALLO / YELLOW / JAUNE / GELB
GN = VERDE / GREEN / VERT / GRÜN
RD = ROSSO / RED / ROUGE / ROT
WH = BIANCO / WHITE / BLANC / WEISS
OG= ARANCIO / ORANGE / ORANGE / ORANGE
VT= VIOLETTO / VIOLET / VIOLET / VIOLETT
GY= GRIGIO / GREY / GRIS / GRAU
PK= ROSA / PINK / ROSE / ROSA
GD= ORO / GOLD / OR / GOLD
TQ= TURCHESE / TURQUOISE / TURQUOISE / TURKISBLAU
SR= ARGENTO / SILVER / ARGENT / SILBER
GNYE= GIALLO/VERDE / YELLOW/GREEN / JAUNE/VERT / GELB/GRUN
COLLEGAMENTI ELETTRICI A CURA DELL' INSTALLATORE ELECTRICAL CONNECTIONS SET BY INSTALLER ELEKTROANSCHLÜSSE VOM INSTALLATEUR AUSZUFÜHREN RACCORDEMENTS ÉLECTRIQUE EFFECTUÉ PAR L' INSTALLATEUR
Sheet : 10

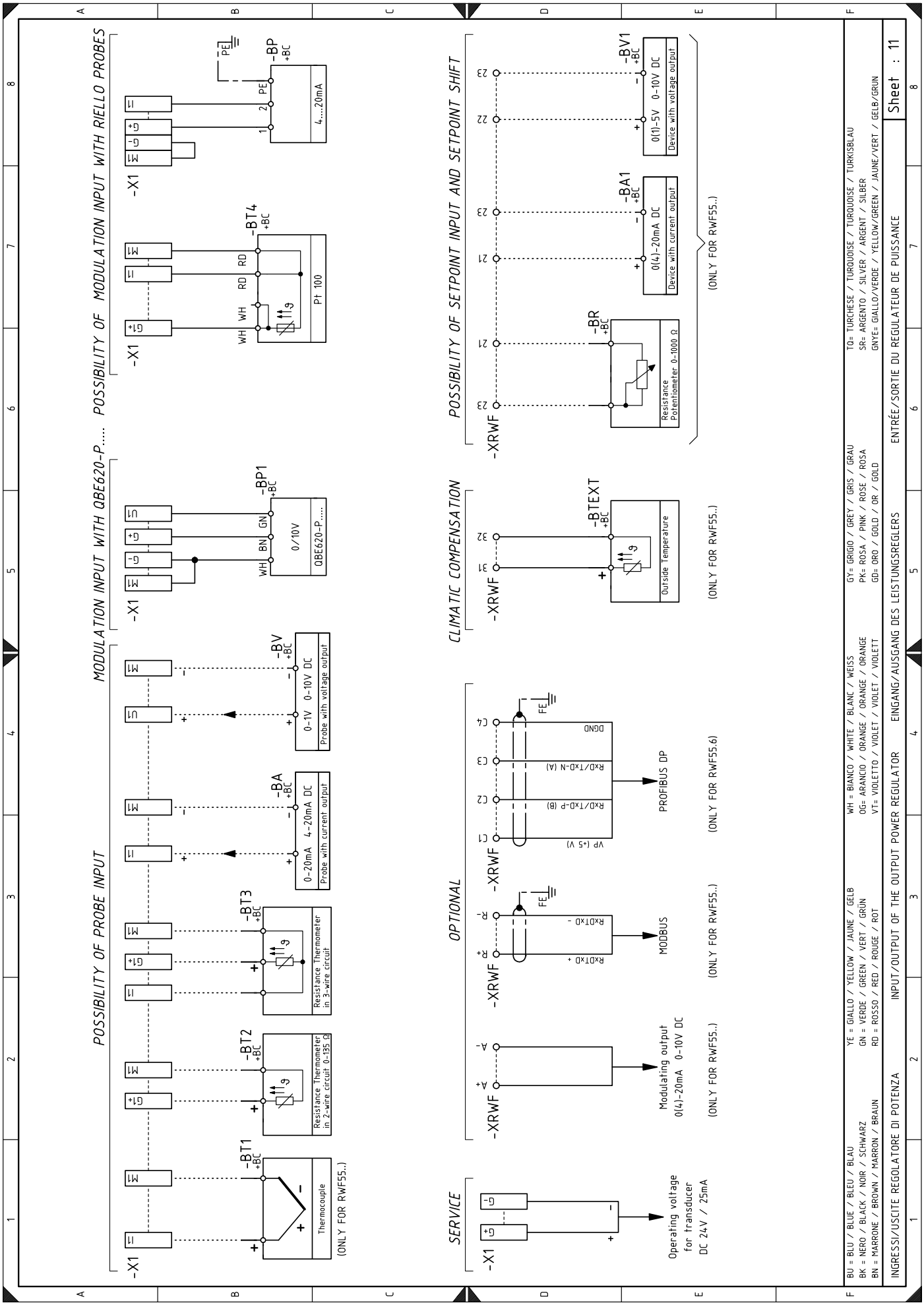
POSSIBILITY OF PROBE INPUT
MODULATION INPUT WITH QBE620-P..... POSSIBILITY OF MODULATION INPUT WITH RIELLO PROBES
-X1
-BT1
Thermocouple
(ONLY FOR RWF55..)
-BT2
Resistance Thermometer in 2-wire circuit 0-135 Ω
-BT3
Resistance Thermometer in 3-wire circuit
-BA
0-20mA 4-20mA DC
Probe with current output
-BV
0-1V 0-10V DC
Probe with voltage output
-BP1
0/10V
QBE620-P.....
-BT4
Pt 100
-BP
4....20mA
SERVICE
Operating voltage for transducer DC 24V / 25mA
OPTIONAL
-XRWF
Modulating output 0(4)-20mA 0-10V DC
(ONLY FOR RWF55..)
MODBUS
PROFIBUS DP
(ONLY FOR RWF55.6)
CLIMATIC COMPENSATION
-BTEXT
Outside Temperature
POSSIBILITY OF SETPOINT INPUT AND SETPOINT SHIFT
-BR
Resistance Potentiometer 0-1000 Ω
-BA1
0(4)-20mA DC
Device with current output
-BV1
0(1)-5V 0-10V DC
Device with voltage output
BU = BLU / BLEU / BLAU
BK = NERO / BLACK / NOIR / SCHWARZ
BN = MARRONE / BROWN / MARRON / BRAUN
YE = GIALLO / YELLOW / JAUNE / GELB
GN = VERDE / GREEN / VERT / GRÜN
RD = ROSSO / RED / ROUGE / ROT
WH = BIANCO / WHITE / BLANC / WEISS
OG= ARANCIO / ORANGE / ORANGE / ORANGE
VT= VIOLETTO / VIOLET / VIOLET / VIOLETT
GY= GRIGIO / GREY / GRIS / GRAU
PK= ROSA / PINK / ROSE / ROSA
GD= ORO / GOLD / OR / GOLD
TQ= TURCHESE / TURQUOISE / TURQUOISE / TURKISBLAU
SR= ARGENTO / SILVER / ARGENT / SILBER
GNYE= GIALLO/VERDE / YELLOW/GREEN / JAUNE/VERT / GELB/GRÜN
INGRESSI/USCITE REGOLATORE DI POTENZA
INPUT/OUTPUT OF THE OUTPUT POWER REGULATOR
EINGANG/AUSGANG DES LEISTUNGSREGLERS
ENTRÉE/SORTIE DU REGULATEUR DE PUISSANCE
Sheet : 11

Wiring layout key

A1	Electronic cam
A2	Display and calibration unit
B	Suppressor
B1	Output power regulator RWF50 internal
B2	Fuel level measurer
BA	Output probe in current
BA1	Output device in current to modify remote setpoint
BP	Pressure probe
BP1	Pressure probe
BR	Remote set point potentiometer
BT	Thermocouple
BT1	Thermocouple probe
BT2	Probe Pt100, 2 wires
BT3	Probe Pt100, 3 wires
BT4	Probe Pt100, 3 wires
BTEXT	External probe for climatic compensation of the set-point
BV	Output probe in voltage
BV1	Output device in voltage to modify remote setpoint
F1	Fan motor thermal relay
FU	Auxiliary circuits safety fuse
G	Control device for combustion head temperature
G1	Load indicator
G2	Communication interface for Modbus system
H	Burner working lighting signal output
H1-H2	Light signal on the burner
KMV	Direct start up contactor
KPAF1	“Safety” relay air filter
KPAF2	“Warning” relay air filter
K1	Clean contacts output relay burner switched on
K2	Clean contacts output relay burner lockout
K3	Clean contacts output relay “Warning” air filter
IN	Burner manual stop electric switch
MV	Fan motor
PA	Air pressure switch
PAF1	“Safety” filter for air pressure switch
PAF2	“Warning” filter for air pressure switch
PE	Burner earth
PGMax	Maximum gas pressure switch
PGMin	Minimum gas pressure switch
PGVP	Gas pressure switch for valve leak detection control device
RS	Burner reset switch
S2	ON/OFF selector
SM1	Air servomotor
SM2	Gas servomotor
TA	Ignition transformer
TL	Limit thermostat/pressure switch
TR	Adjustment thermostat/pressure switch
TS	Safety thermostat/pressure switch
UV	UV sensor
W...	Electric cables
X1	Main terminal supply board
X2	Auxiliary circuit terminal board for air filter
XP1	Output power regulator connector RWF50
XPD	Plug for on board display
XPGMax	Maximum gas pressure switch connector
XPGMin	Minimum gas pressure switch connector
XPGVP	Gas pressure switch connector for valve leak detection control device
XRWF	Terminal board for output power regulator RWF50
XSM...	Servomotor plug/socket
XTA	Ignition transformer connector
XVP	Ignition pilot valve connector
Y	Gas regulator valve + gas safety valve
Y1	Ignition pilot valve

RIELLO S.p.A.
I-37045 Legnago (VR)
Tel.: +39.0442.630111
http:// www.riello.it
http:// www.riello.com

Subject to modifications