GB

Forced draught gas burner

Two stage operation

CODE	MODEL	TYPE
3752582	GAS 7/2	525 T80

2915869 (5) - 07/2015

Declaration of conformity in accordance with ISO / IEC 17050-1		
Manufacturer:	RIELLO S.p.A.	
Address:	Via Pilade Riello, 7 37045 Legnago (VR)	
Product:	Forced draught gas burner	
Model:	GAS 7/2	
These products are in compliance with the following Technical Standards:		
EN 676		
EN 12100		
and according to the European Directives:		
MD	2006/42/EC	Machine Directive
LVD	2006/95/EC	Low Voltage Directive
EMC	2004/108/EC	Electromagnetic Compatibility

The quality is guaranteed by a quality and management system certified in accordance with UNI EN ISO 9001.

Legnago, 21.05.2015

Executive General Manager
RIELLO S.p.A. - Burner Department
Mr. U. Ferretti

Research & Development Director
RIELLO S.p.A. - Burner Department
Mr. F. Comencini

TECHNICAL DATA

Thermal power	2nd stage 800 ÷ 1760 kW - 688.000 ÷ 1.513.600 kcal/h
Operation	Two stages, high and low flame
Fuel	Natural gas Pci 8 - 10 kWh/m^3 = 7000 - 8600 kcal/m^3
Minimum gas pressure	For maximum output 14,5 mbar are needed measured at the coupling with nil pressure in the combustion chamber and gas with calorific value of 8600 kcal/m^3
Maximum gas pressure	90 mbar

ELECTRICAL DATA

Electrical supply	Three-phase 220V +10% -10% ~ 60Hz without neutral 380V +10% -10% ~ 60Hz with neutral
Motor IE2	10A / 230V - 5.8A / 400V
Ignition transformer	Primary: 1.8A/220V - Secondary: 1x 8kV - 30 mA
Absorbed electrical power	4.1 kW

BURNER DESCRIPTION

1 - Air damper controlling motor
2 - Control box reset button
3 - Fair leads
4 - Wiring terminal block
5 - Reset push-button of the motor overload relay
6 - Air pressure switch
7 - Gas pressure test-point

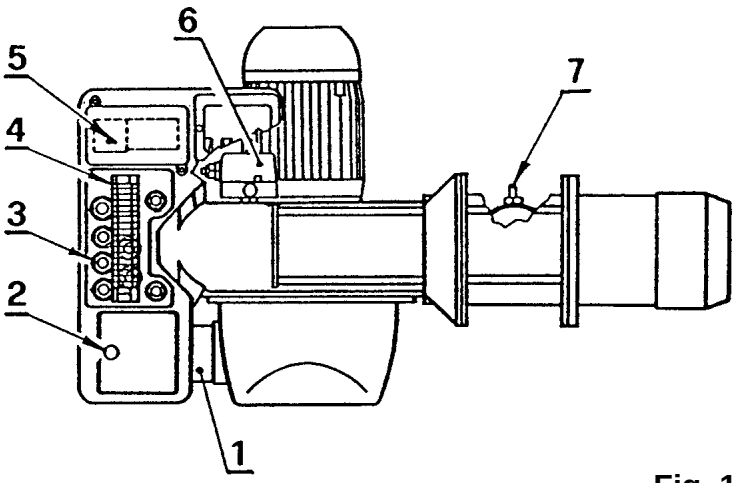

Fig. 1

STANDARDS EQUIPMENT

Quantity	Description
1	Flange
1	Gasket
8	Screws
1	Flange gasket

ACCESSORIES

- **RADIO DISTURBANCE PROTECTION KIT code 3010386**
  If the burner is installed in places particularly subject to radio disturbance (emission of signals exceeding 10 V/m) owing to the presence of an INVERTER, or in applications where the length of the thermostat connections exceeds 20 metres, a protection kit is available as an interface between the control box and the burner.

OVERALL DIMENSIONS

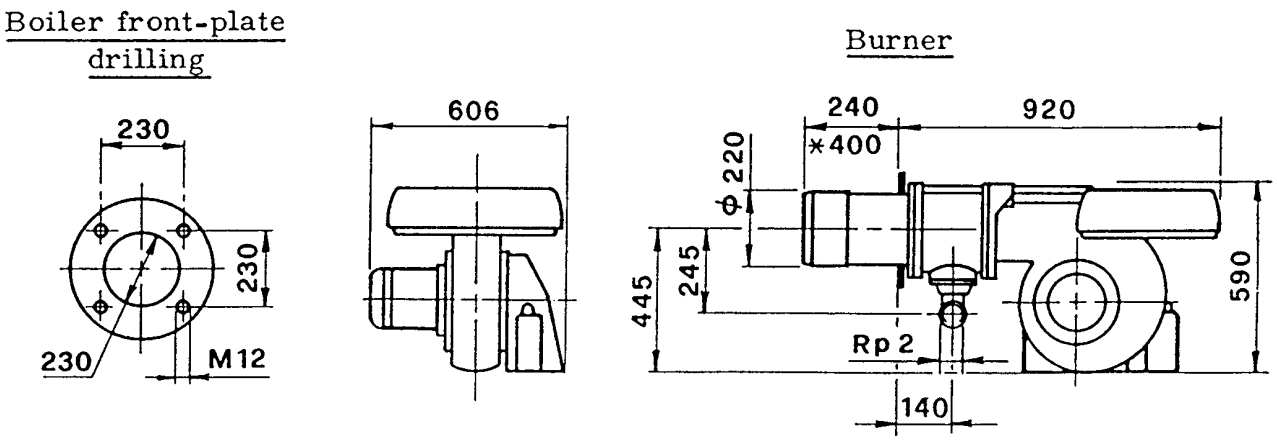

* Length available with special blast tube to be separately required.

FIXING TO THE BOILER

Separate the combustion head from the burner body by loosening the screws 1) and 2) and with drawing the group **A**) from the holding bars 3).

Fix the group **B**) to the boiler front plate 4) using the gasket 5) provided as accessory.

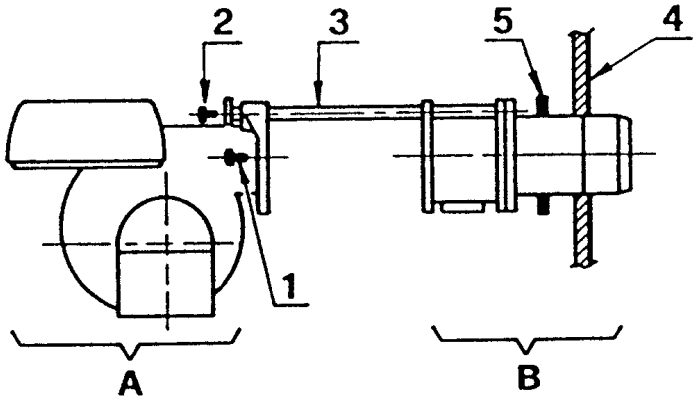

COMBUSTION CHAMBER PRESSURE - 2nd STAGE OUTPUT

(in compliance with DIN 4788)

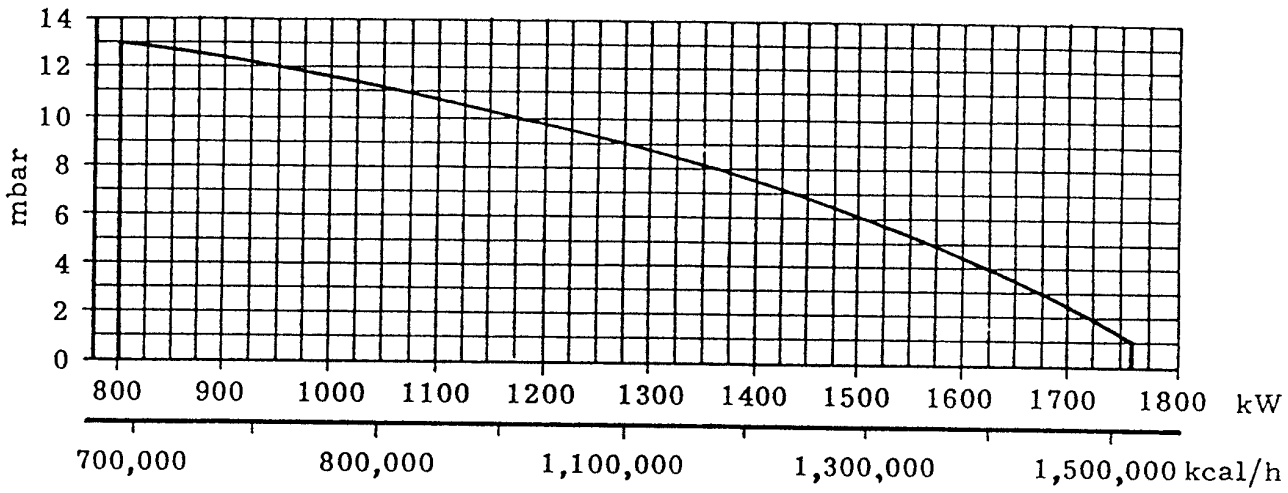

Min. output at 1st stage: 400 kW - 344.000 kcal/h

MINIMUM GAS PRESSURE - OUTPUT

PRESSURE: detected at the pressure test-point 7) (fig. 1) with nil mbar into the combustion chamber.
Should the combustion chamber be pressurized, the pressure necessary will be that of the graph plus the pressurization value.

Example: to obtain 1250 kW it is necessary a gas pressure of 12 mbar and the combustion head set as indicated at page 9.
If the combustion chamber is pressurized at 2 mbar, the pressure detected at the test-point 7) is: 12 + 2 = 14 mbar.
If this value is too high, for very low gas pipework pressures, the gas gear 6) (page 9) could be more open. Do not decrease the pressure at the coupling under the values shown in the diagram.

OUTPUT: the maximum value is obtainable with gas Pci 8600 kcal/m^3.

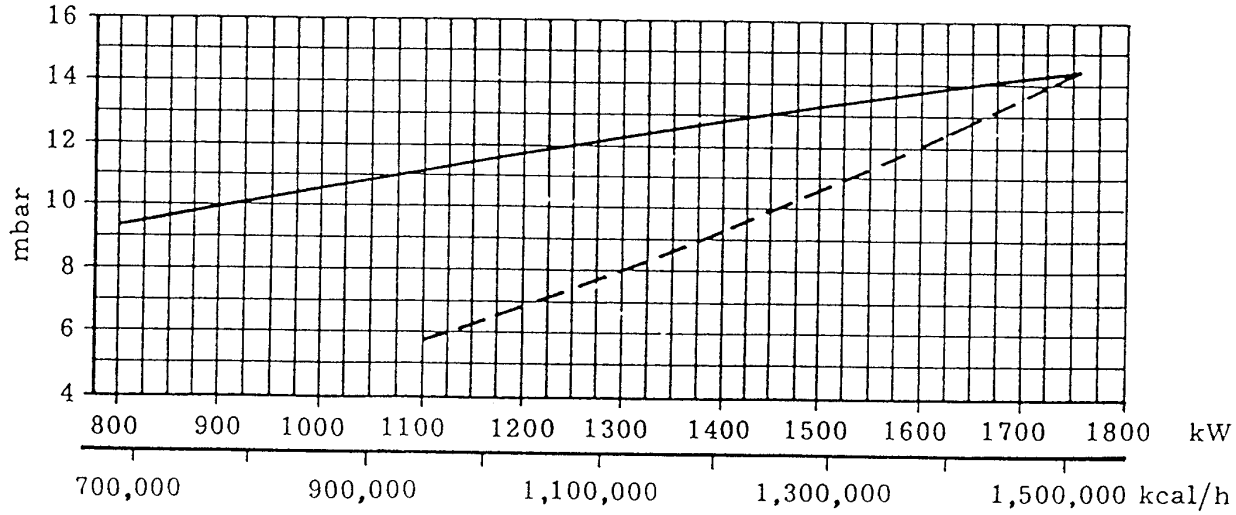

GAS SUPPLY

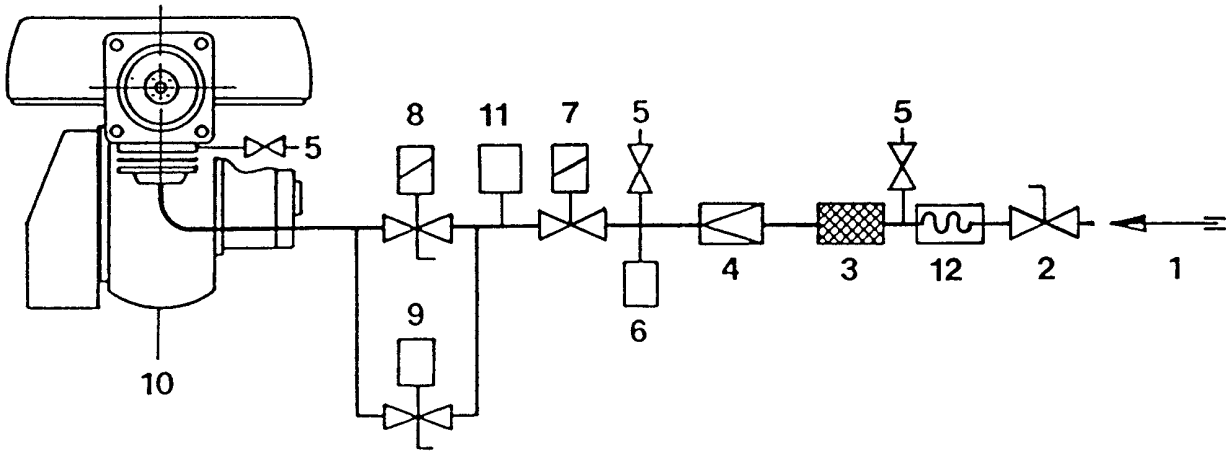

KEY

1 - Gas pipe line
2 - Cock valve
3 - Filter
4 - Pressure stabilizer
5 - Pressure test-point
6 - Minimal gas pressure switch
7 - Gas safety shut off valve
8 - 1st stage gas shut off valve
9 - 2nd stage gas shut off valve
10 - Burner
11 - Gas leak control device
12 - Isolator joint

BURNER ELECTRICAL WIRING

(carried out by the factory)

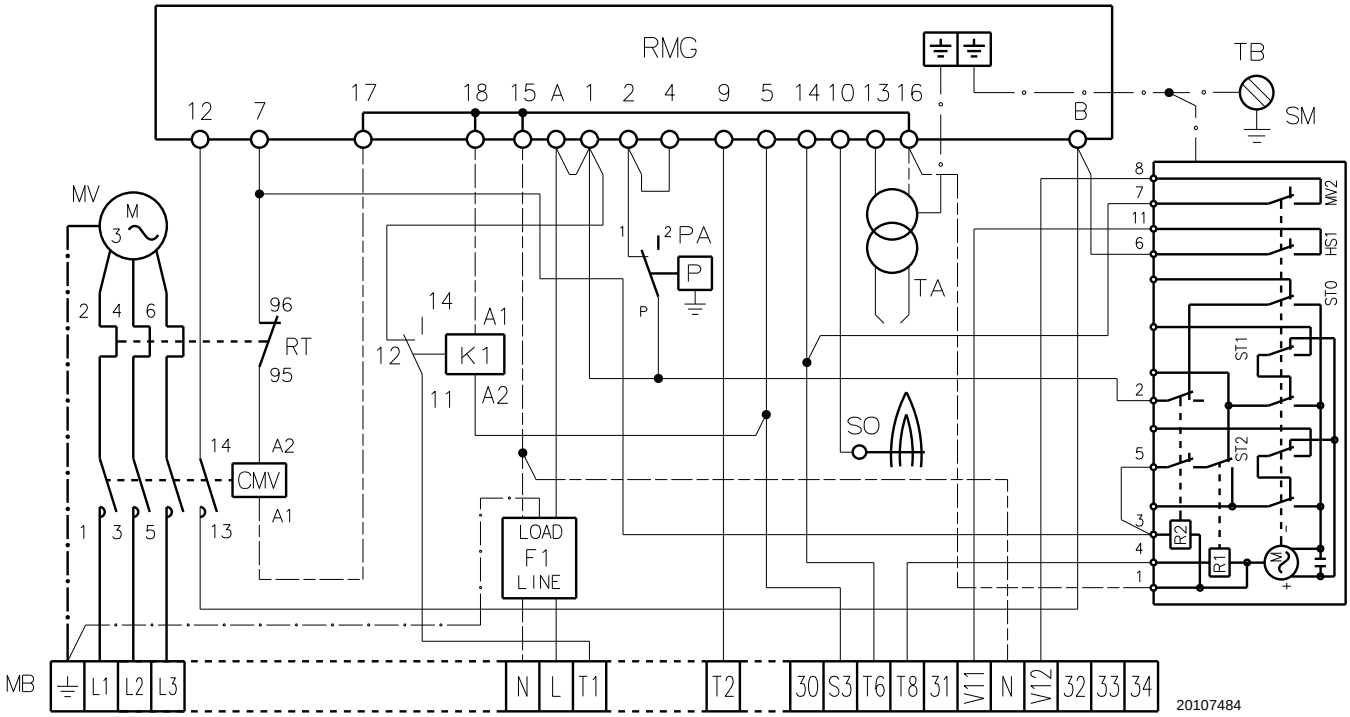

CMV Fan motor contactor
F1 Protection against radio interference
K1 Relay
MB Burner terminal strip
MV Fan motor
PA Air pressure switch
RMG Control box
RT Thermal overload
SM Servomotor
SO Ionisation probe
TA Ignition transformer
TB Burner earth

ATTENTION

In the case of phase-phase feed, a bridge must be fitted on the control box terminal board between terminal 6 and the earth terminal.

ELECTRICAL CONNECTIONS TO THE WIRING TERMINAL BLOCK

(to be carried out by the installer)

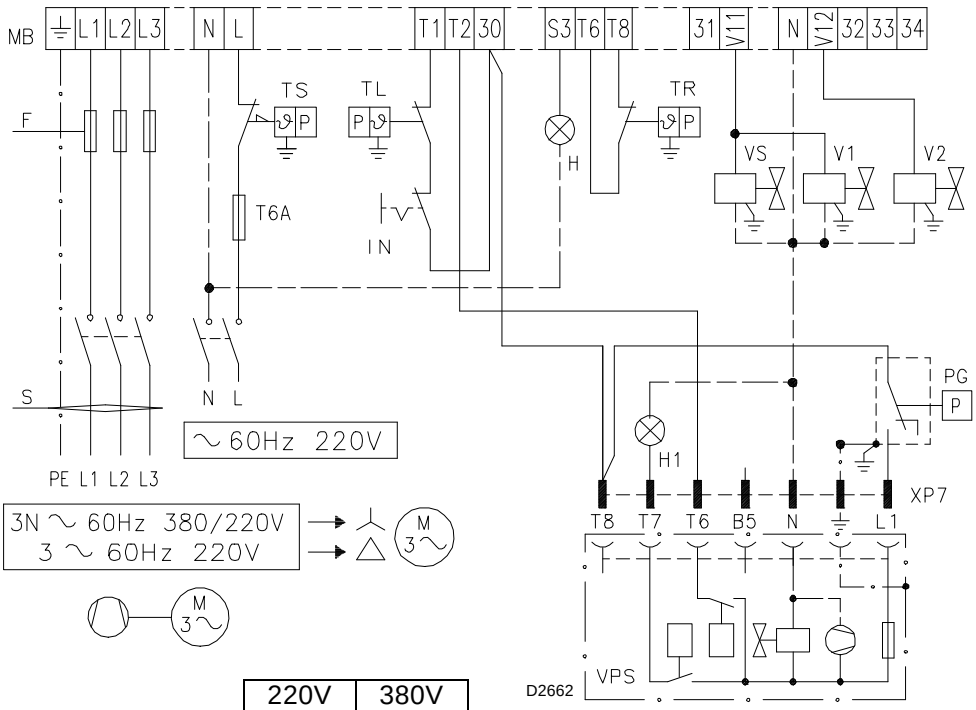

	220V	380V
F Ampere	T25	T16
S mm^2	2,5	1,5

H	Remote lock-out signal	**TS**	Safety control device system
H1	Remote lock-out signal of leak detection control device	**VS**	Gas safety shut off valve
MB	Burner terminal strip	**VPS**	Leak detection control device
PG	Minimum gas pressure switch	**V1**	1st stage gas shut off valve
TL	Limit control device system	**V2**	2nd stage gas shut off valve
TR	2nd stage remote control system	**XP7**	Plug for leak detection control device

NOTICE

- The electrical wiring carried out by the installer must be in compliance with the rules in force in the Country.

- Leads minimal section 1 mm^2.

- Adjustment for the motor thermal relay:
  - at the beginning of the scale for 380V;
  - at the end of the scale for 220V.

- Burners with non-stop operation. For safety reasons, this type of burner must be stopped every 24 hours of operation, by means of an hours-counter to be connected in series with the adjustment devices.

FLAME MODULATION

The flame modulation is obtainable through the thermostat, controlling the second valve, connected to the terminals 10 and 11.

FIXING OF THE ELECTRICAL WIRES

All the electrical wires, which are to be connected to the terminal block 4) (fig. 1) shall pass through the fair leads 3) (fig. 1) as per this scheme.

1 - Three phase supply: fair lead Pg 21
2 - Single phase supply: fair lead Pg 13.5
3 - Adjustment thermostat: fair lead Pg 13.5
4 - Safety thermostat: fair lead Pg 13.5
5 - Gas train: fair lead Pg 13.5, sheath ø 13
6 - 2nd stage thermostat: fair lead Pg 13.5
7 - Pre-sheared holes
8 - Pre-sheared holes

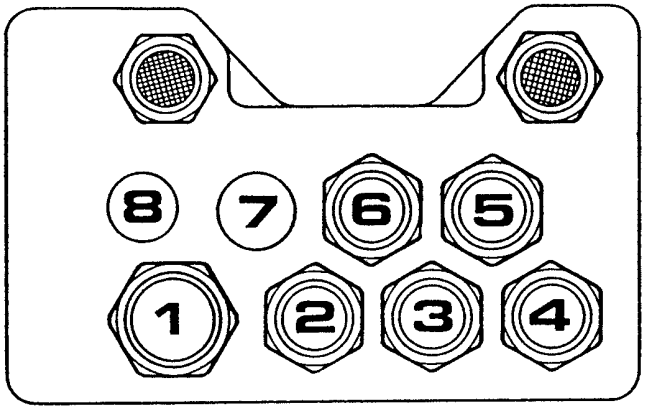

Further prospective signals or controls can be connected to the burner wiring terminal board by removing the metal weldnuts from the pre-sheared holes and inserting a commun fair lead for the passage and the clamping of the leads.

NOTES

- Do not exchange the neutral wire with the phase (avoid the plug-pin connection).
- Carry out a safe earth connection.
- Check the stop of the burner, by opening the boiler thermostat and the burner lock-out, by disconnecting the lead from the flame probe.

WARNING

When closing the burner on its slide-bars, pull towards the outside the high voltage cable and the cable of the flame detection probe, till to little tension.

BURNER START-UP CYCLE

Air-purge: loosen the screw placed on the minimal gas pressure switch mounted on the gas train.

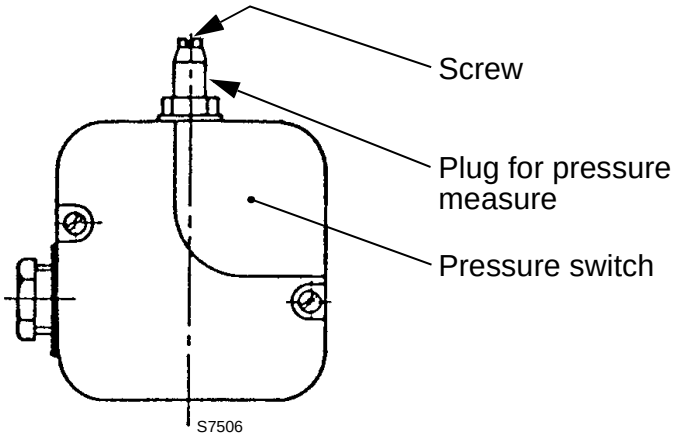

AIR PRESSURE SWITCH

The air pressure switch 6)(fig. 1) setting shall be carried out after having set all other adjustments of the burner and the air pressure switch shall be at its lowest set-point.
When the burner is operating, increase the adjustment pressure by turning - slowly - clockwise the knob till reaching the burner lock-out.
Thereafter, turn the knob anticlockwise for 1 mbar and repeat the burner start-up for checking the regularity: if lock-out intervenes turn the knob anticlockwise for 0.5 mbar.

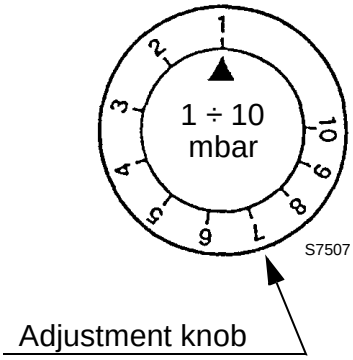

PROBE - IGNITION ELECTRODE POSITION

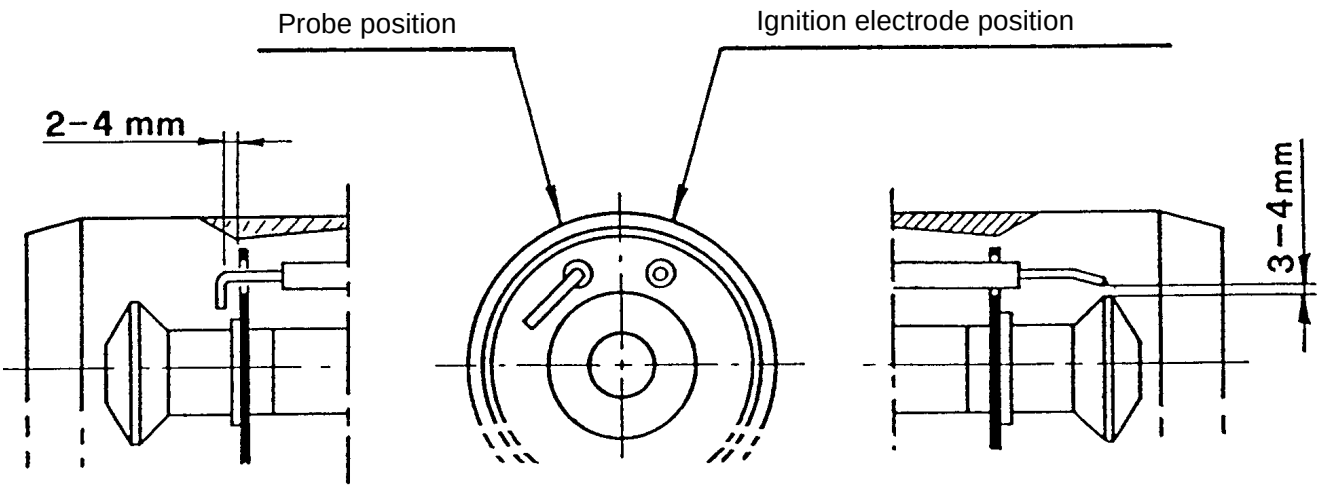

CAUTION
Do not turn the ionization probe, maintain the drawing position; should it be close to the ignition electrode, damage may occur to the control box amplifier.

COMBUSTION HEAD ADJUSTMENT

Two separate adjustments have to be made: air and gas. These adjustments can be carried out when the burner is still open, during the installation (see page 4 - Fixing to the boiler).

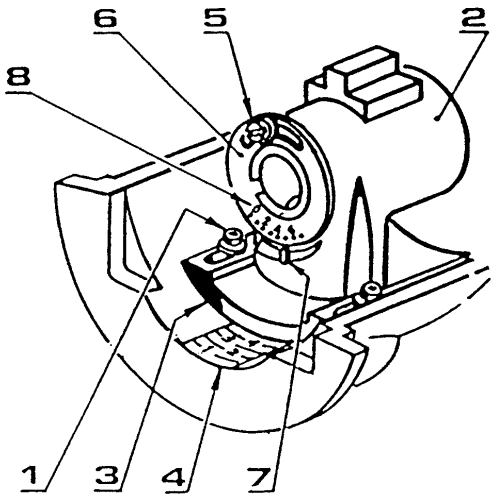

AIR SETTING
Loosen the two screws 1) and move the internal part of the combustion head 2) so that its rear edge 3) is coincident with the desired set-point on the plate 4).
Tighten the screws 1).

GAS SETTING
Loosen the screw 5), move the ring 6) so that the pointer 7) is coincident with the desired set-point 8).
Tighten the screw 5).

Attention:
The set-point number is the same for air and gas setting and is given by the following diagram.

Example:
the burner is installed on a boiler of 1350 kW, assuming an efficiency of 90% the burner output should be 1500 kW. From the diagram it can be seen that the air and gas settings for this rating should be no. 5.

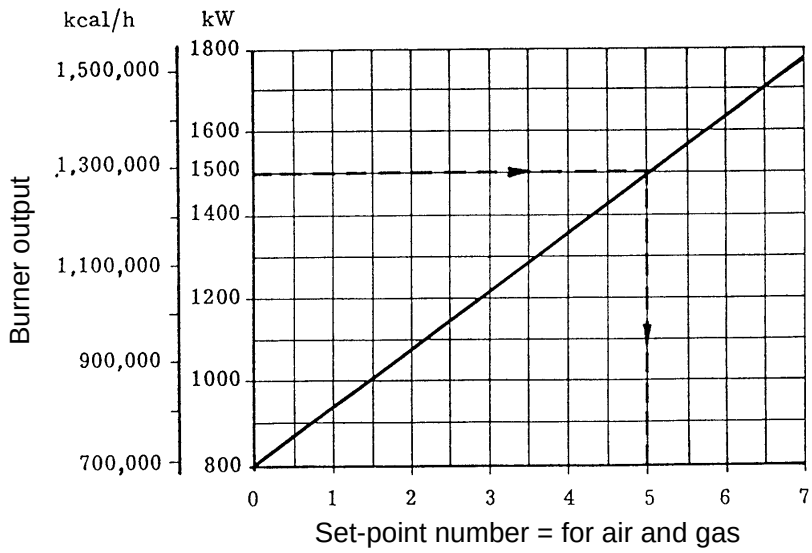

ADJUSTMENT OF THE AIR DAMPER MOTOR

STOP - Blue lever
This lever leaves the factory vertically positioned and corresponds to the complete closing of the air damper.
A partial opening of the air damper might be obtained by moving leftwards this lever (+ on the label).
The new position of the air damper is detectable when the burner is off.
Do not overcome the position of the orange lever for the 1st stage.

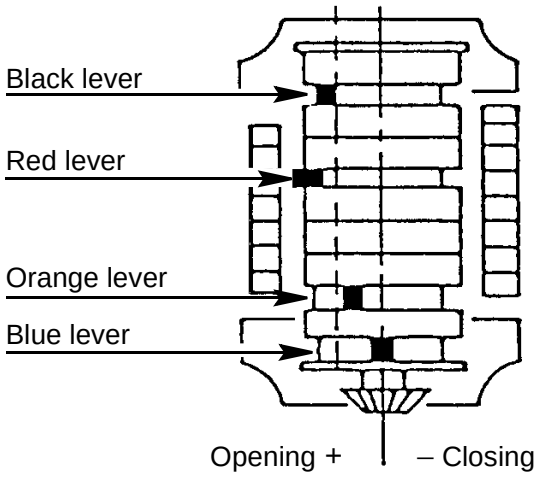

The black lever must anticipate the red one

1st STAGE - Orange lever
The orange lever controls the air damper position for the first flame, it is adjustable both for opening and closing.

2nd STAGE - Red and black levers
The red lever controls the air damper position for the second flame, it is adjustable both for closing and opening.
The black lever controls the opening of the second oil valve and it must always anticipate - for a bit - the red lever, but never the orange one.

OPERATIONAL DIAGRAM

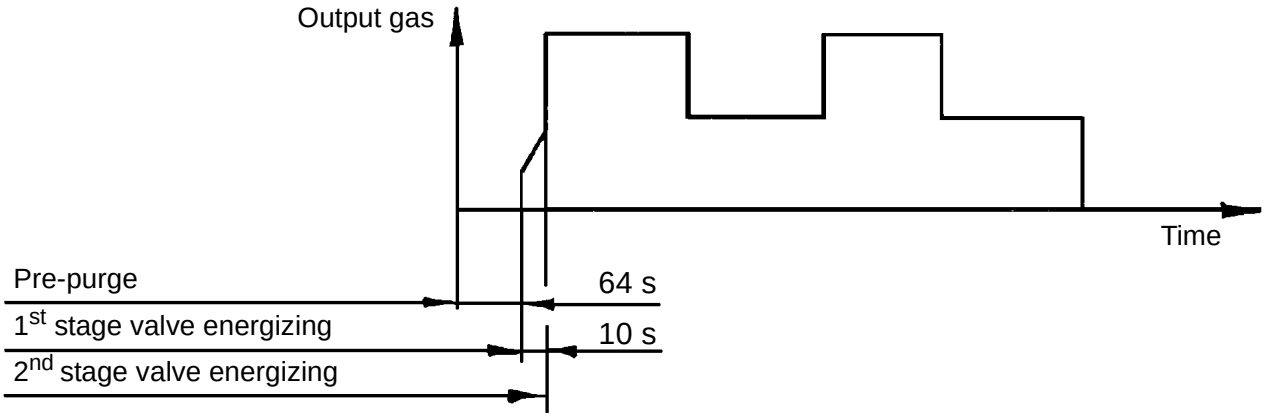

COMBUSTION CHECKS

CO_2

It is advisable to not exceed 10% of CO_2 (gas with calorific value of 8600 kcal/m3), in order to avoid the risk that small changes of the adjustments due, for instance, at draught variation, may cause combustion with insufficient air and consequently formation of CO.

CO

For safety reason the value of 0.1% (one thousand p.p.m.) must not be exceeded.

IONIZATION CURRENT

The minimum current necessary for the control box operation is 3 µA.
The burner normally supplies a higher current value, so that no check is needed.
However, if a measurement of the ionization current is required, it is necessary to disconnect the probe lead and insert a d.c. microamperometer.

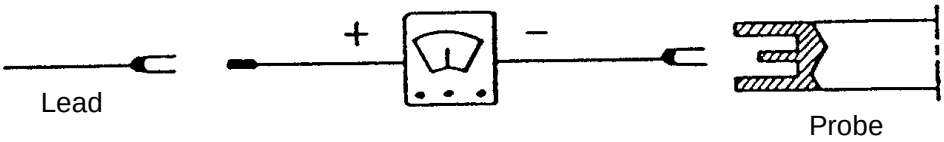

MOTOR LOCK-OUT

This is caused by the thermal protector relay, in case of overloading, or by the lacking of the phase.
To clear, pushdown the appropriate knob, after having removed the protective cover.

BURNER START-UP

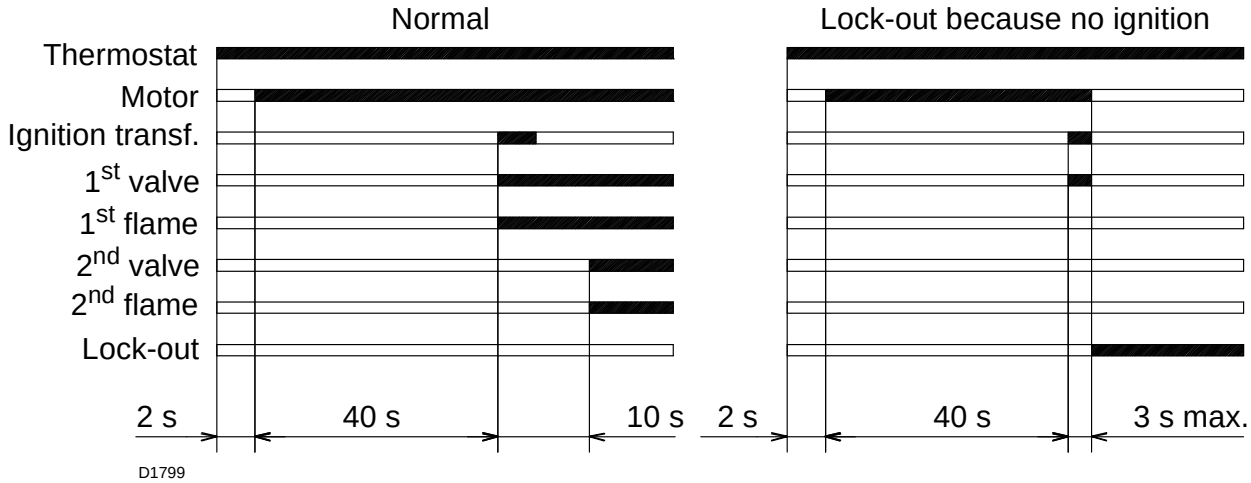

If during operation the flame shuts off, lock-out occurs within 1 sec.

BURNER STARTING DIFFICULTIES AND THEIR CAUSES

Signal	Problem	Possible cause	Recommended remedy
2 blinks ● ●	Once the pre-purging phase and safety time have passed, the burner goes into lockout without the appearance of the flame	1 - The operation solenoid lets little gas through	Increase
		2 - One of the two solenoid valves does not open.	Replace
		3 - Gas pressure too low.	Increase pressure at governor
		4 - Ignition electrode incorrectly adjusted	Adjust
		5 - Electrode grounded due to broken insulation	Replace
		6 - High voltage cable defective	Replace
		7 - High voltage cable deformed by high temperature	Replace and protect
		8 - Ignition transformer defective	Replace
		9 - Incorrect valve or transformer electrical wiring	Check
		10 - Defective control box.	Replace
		11 - A closed valve upline the gas train	Open
		12 - Air in pipework.	Bleed air
		13 - Gas valves unconnected or with interrupted coil	Check connections or replace coil
3 blinks ● ● ●	The burner does not switch on, and the lockout appears	14 - Air pressure switch in operating position	Adjust or replace
	The burner switches on, but then stops in lockout	- Air pressure switch inoperative due to insufficient air pressure:	
		15 - Air pressure switch incorrectly adjusted.	Adjust or replace
		16 - Pressure switch pressure test point pipe blocked	Clean
		17 - Poorly adjusted head.	Adjust
		18 - High pressure in the furnace	Connect air pressure switch to fan suction line
	Lockout during pre-purging phase	19 - Defective motor control contactor (only three-phase version)	Replace
		20 - Defective electrical motor	Replace
		21 - Motor lockout (defective electrical motor)	Replace
4 pulses ● ● ● ●	The burner switches on, but then stops in lockout	22 - Flame simulation	Replace the control box
	Lockout when burner stops	23 - Permanent flame in the combustion head or flame simulation	Eliminate persistence of flame or replace control box
7 blinks ● ● ● ● ● ● ●	The burner goes into lockout immediately following the appearance of the flame	24 - The operation solenoid lets little gas through	Increase
		25 - Ionisation probe incorrectly adjusted.	Adjust
		26 - Insufficient ionisation (less than 5 A).	Check probe position
		27 - Earth probe	Withdraw or replace cable
		28 - Burner poorly grounded.	Check grounding
		29 - Phase and neutral connections inverted	Invert them
		30 - Defective flame detection circuit	Replace the control box
	Burner goes into lockout during operation	31 - Probe or ionisation cable grounded. .	Replace worn parts

Signal	Problem	Possible cause	Recommended remedy
10 blinks ●●●●● ●●●●●	The burner does not switch on, and the lockout appears	32 - Incorrect electrical wiring.	Check
	The burner goes into lockout	33 - Defective control box.	Replace
		34 - Presence of electromagnetic . . . . . disturbances in the thermostat lines	Filter or eliminate
		35 - Presence of electromagnetic. . . . . disturbance	Use the radio disturbance protection kit
No blink	The burner does not start	36 - No electrical power supply	Close all switches - Check connections
		37 - A limiter or safety control device is open	Adjust or replace
		38 - Line fuse blocked	Replace
		39 - Defective control box.	Replace
		40 - No gas supply	Open the manual valves between contactor and train
		41 - Mains gas pressure insufficient.	Contact your GAS COMPANY
		42 - Minimum gas pressure switch fails to close	Adjust or replace
	The burner continues to repeat the start-up cycle, without lockout	43 - The gas pressure in the gas mains lies very close to the value to which the minimum gas pressure switch has been set. The sudden drop in pressure after valve opening causes temporary opening of the pressure switch itself, the valve immediately closes and the burner comes to a halt. Pressure increases again, the pressure switch closes again and the ignition cycle is repeated. And so on	Reduce the minimum gas pressure switch intervention pressure. Replace the gas filter cartridge.
	Ignition with pulsations	44 - Poorly adjusted head.	Adjust
		45 - Ignition electrode incorrectly adjusted	Adjust
		46 - Incorrectly adjusted fan air damper: too much air	Adjust
		47 - Output during ignition phase is too high	Reduce

NORMAL OPERATION / FLAME DETECTION TIME

The control box has a further function to guarantee the correct burner operation (signal: **GREEN LED** permanently on).
To use this function, wait at least ten seconds from the burner ignition and then press the control box button for a minimum of 3 seconds.
After releasing the button, the GREEN LED starts flashing as shown in the figure below.

GREEN LED on wait at least 10s	Press button for > 3s	signal	Interval 3s	signal
		● ● ● ● ● ●		● ● ● ● ● ●

The pulses of the LED constitute a signal spaced by approximately 3 seconds.
The number of pulses will measure the probe DETECTION TIME since the opening of gas valves, according to the following table:

SIGNAL	FLAME DETECTION TIME
1 blink ●	0.4s
2 blinks ● ●	0.8s
6 blinks ● ● ● ● ● ●	2.8s

This is updated in every burner start-up.
Once read, the burner repeats the start-up cycle by briefly pressing the control box button.
WARNING
If the result is > 2s, ignition will be retarded.
Check the adjustment of the hydraulic brake of the gas valve, the air damper and the combustion head adjustment.

KIT INTERFACE ADAPTER RMG TO PC Code **3002719**

BURNER START UP CYCLE DIAGNOSTICS

During start-up, indication is according to the following table:

COLOUR CODE TABLE	
Sequences	**Colour code**
Pre-purging	●●●●●●●●●●●
Ignition phase	●❍●❍●❍●❍●❍●
Operation, flame ok	❑❑❑❑❑❑❑❑❑❑❑❑
Operating with weak flame signal	❑❍❑❍❑❍❑❍❑❍
Electrical supply lower than ~ 170V	●▲●▲●▲●▲●▲●
Lock-out	▲▲▲▲▲▲▲▲▲▲
Extraneous light	▲❑▲❑▲❑▲❑▲❑▲
Key: ❍ Off ● Yellow ❑ Green ▲ Red	

OPERATING FAULT DIAGNOSTICS

The control box has a self-diagnostic system, which easily allows identifying the operating faults (**RED LED** signal).
ITo use this function, wait at least ten seconds from the safety lock out, and then press the reset button for a minimum of 3 seconds.
After releasing the button, the RED LED starts flashing as shown in the diagram below.

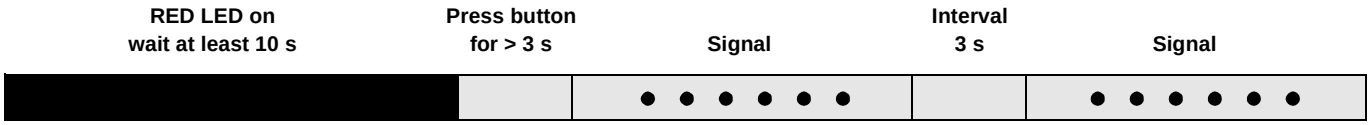

The pulses of the LED constitute a signal spaced by approximately 3 seconds.
The number of pulses will provide the information on the possible faults, according to the table below:

SIGNAL	PROBABLE CAUSE
2 flashes ● ●	The flame does not stabilise at the end of the safety time: – faulty ionisation probe; – faulty or soiled gas valves; – neutral/phase exchange; – faulty ignition transformer; – poor burner regulation (insufficient gas).
3 flashes ● ● ●	Min. air pressure switch does not close: – air pressure switch faulty; – air pressure switch incorrectly regulated; – max. air pressure switch triggered (if installed).
4 flashes ● ● ● ●	Min. air pressure switch does not open or light in the chamber before firing: – air pressure switch faulty; – air pressure switch incorrectly regulated.
7 flashes ● ● ● ● ● ● ●	Loss of flame during operations: – poor burner regulation (insufficient gas); – faulty or soiled gas valves; – short circuit between ionisation probe and earth.
8 flashes ● ● ● ● ● ● ● ●	– Not used.
10 flashes ● ● ● ● ● ● ● ● ● ●	– Wiring error or internal fault.

RIELLO S.p.A.
I-37045 Legnago (VR)
Tel.: +39.0442.630111
http:// www.riello.it
http:// www.riello.com

Subject to modifications